ALUMINUM CUTTING LIST

QR 7.3.0.1 Rev A 2019

PROJECT CODE	10239	Complete	Partial	Additional	Sample	ACL	ACL-35-R00
PROJECT NAME	SOLIMAN FAKEEH HOSPITAL	YES	X	X	X		
ITEM REF. No. :	PENABLE WINDOW FRONT&LEFT ELEVATION					DATE	11/Oct/23
QTY OF UNITS :	205					PE NAME	Ajmal Koya
SYSTEM	ALUPCO 56D	FINISH: RAL-SDF-7046 With 50% Gloss				Revision	Rev-00

SN.	MATERIAL	SYSTEM	CODE	DESCRIPTION	QTY	AREA	Length	Remarks
1	ALUMINUM	ALUPCO 56D		FRONT AND LEFT ELEVATION ALUPCO 56D HINGED WINDOW INSIDE CURTAINWALL	Total 205 Set	251.88 M2		
				Zone-A-Front Elevation CW01-W01	60			
				Zone-A-Front Elevation CW01A-W01	2			
				Zone-A-Front Elevation CW01B-W01	7			
				Zone-B-Front Elevation CW01C-W01	11			
				Zone-B-Front Elevation CW01D-W01	11			
				Zone-C-Front Elevation CW03-W01	66			
				Zone-C-Front Elevation CW01F-W01	5			
				Zone-A-Left Elevation CW08-W01	43			
	References MTO's&GCL							
	Profile	MTO#17						
	Hardware	MTO#29						
	GCL	GCL#28						
				TOTAL	205			

ALUSYSTEMS CONTROLLED COPY DATE: 14/09/23 SIGN:

Checked By :	Checked By :	Approved By :	Received By :
Ajmal Koya	Eng. Hisham Mahfouz	Eng. Ahmed Helal	Eng. Hamed
11/10/2023	11 oct 23	11/oct./2023	
Senior Designer	Design Manager	Technical Director.	Operation Manager

Material List ACL No:~~036~~ 035

Description	Art.No	Bar length	Unit	Qty	MTO Reff:	FINISH	Remarks
Frame Profile	Alupco-AT-1500	5100	Bar	28	MTO Reff:17	RAL-SDF-7046 With 50% Gloss	
Frame Profile	Alupco-AT-1500	5500	Bar	137			
Sash Profile	Alupco-AT-1502	5000	Bar	83			
Sash Profile	Alupco-AT-1502	5450	Bar	82			
Glazing Bead	Alupco-'41018	5600	Bar	137			
Corner Cleat	Alupco-17863	6000	Bar	2		MILL FINISH	
Corner Cleat	Alupco-17868	6000	Bar	9		MILL FINISH	
20x30x2mm thk Aluminum Tube	Alupco-62016	5250	Bar	83		RAL-SDF-7046 With 50% Gloss	
20x30x2mm thk Aluminum Tube	Alupco-62016	6000	Bar	82			
Aluminum L Angle 15*20*2mm	Alupco-61004	6000	Bar	27		MILL FINISH	

Accessories List ACL No:~~036~~ 035

Internal glazing Gasket 6mm	A92013E	760	L/M		MTO Reff:17		
External glazing Gasket 3.5mm	A92033E	760	L/M				
Shutter Central Gasket	A064083E	870	L/M				
Shutter Gasket	A064084E	870	L/M				
GIESSE-EURO AWAY CREMONE Handle	GIESSE 01001	205	PCS		MTO Reff:29	BLACK	
GIESSE-EURO REMOVABLE PULL Handle	GIESSE 01130	205	PCS			BLACK	
GIESSE-Flash Base Hinge	GIESSE 00120U	410	PCS			RAL-SDF 7046	
Sash Closing Kit	GIESSE 02270	205	PCS				

W/N

02/07/23

Material Take Off

QR 7.4.0/1 Rev A/2020

DATE: 26-Jun-23	MTO-17 REV.00		PAGE NO : 1
PROJECT CODE	10239	SITE .	
PROJECT NAME	SOLIMAN FAKEEH HOSPITAL	Material Type:	ALUPCO 56 HINGED WINDOW
Project Location	AL MADEENA	Material For:	Production/Factory

Complete	Partial	Additional	Sample
X			

ALUPCO 56 HINGED WINDOW
(Total Qunatily As Per Approved SD 206 Nos)

ENGINEERING										WAREHOUSE			
S. NO.	DESCRIPTION	PROFILE NO. OR ART NO.	LENGTH (mm)	QTY.	UNIT	RAL COLOR	Total Area/ WT. M / Kg	Total / WT.	REMARKS	ITEM CODE	RESERVED QTY	ORDERING QTY.	REMARKS
	ALUPCO 56 HINGED WINDOW												
1	Frame Profile	Alupco-AT-1500	5100	53	Bar	Texture RAL-SDF-7046 with 50% Gloss as approved	.94	254.082			—	53	Extra 20 Bar Concidered to Reach Minimum Order
2	Frame Profile	Alupco-AT-1500	5500	140	Bar		.94	723.8			—	140	
3	Sash Profile	Alupco-AT-1502	5000	90	Bar		1.13	508.5			—	90	
4	Sash Profile	Alupco-AT-1502	5450	90	Bar		1.13	554.265			—	90	
5	Glazing Bead	Alupco-41018	5600	150	Bar		.17	142.8			150	—	Use From Stock- Al Ghad Project(10133)
6	Corner Cleat	Alupco-17863	6000	3	Bar	M.F	1.88	33.84			3	—	
7	Corner Cleat	Alupco-17868	6000	10	Bar	M.F	2.35	141			10	—	
8	20x30x2mm thk Aluminum Tube	Alupco-62016	5250	96	Bar	RAL-SDF-7046	.497	250.488			—	96	Extra 10 Bar Concidered to Reach Minimum Order
9	20x30x2mm thk Aluminum Tube	Alupco-62016	6000	85	Bar		.497	253.47			—	85	
10	Aluminum L Angle 15*20*2mm	Alupco-61004	6000	30	Bar	M.F	.178	32.04			30	—	Use From Stock- KAFD - PARCEL 2.08 (10185)
11	External glazing Gasket 4mm	A92013E		1000	L/M	This Code 6mm					1000	—	A092013E
12	Internal glazing Gasket 6mm	A92033E		1000	L/M	this Code 3.5mm					1000	—	A092033E
13	Shutter Central Gasket	A064083E		1000	L/M						—	1000	
14	Shutter Gasket	A064084E		1000	L/M						—	1000	
15	Counter Sunk SS Tapping Screw 4.2*19(A2)			3500	PC						—	3500	
16	Pan Head SS Tapping Screw 4.8x16 (A2)			3500	PC	Available A4 Div 7991							
						TOTAL		2894.3					

NOTES :

Prepared By:	CHECKED BY	Approved By:			Received By:
Ajmal Koya	Engr. Hisham Mahfouz	Eng. Ahmed Helal	Eng. Hamed	Dr. Sabir	Mr. Mostafa
26/06/2023	26 Jun 23				
Senior Designer	Design Manager	Technical Director	Operation Manager	Deputy Executive Manager	Warehouse Dept.

Note: Hardware will Release Later, once approval received.

2.7.23

Material Take Off

QR 7.4.0/1 Rev A/2020

MTO-29 REV.00

DATE: 13-Aug-23			
PROJECT CODE	10239	SITE .	PAGE NO : 1
PROJECT NAME	SOLIMAN FAKEEH HOSPITAL	Material Type:	ALUPCO 56 TB HINGED WINDOW
Project Location	AL MADEENA	Material For:	FACTORY

Complete	Partial	Additional	Sample	
Yes	X	X	X	ALUPCO 56 HINGED WINDOW(210 Windows)

ENGINEERING									WAREHOUSE			
S. NO.	DESCRIPTION	PROFILE NO. OR ART NO.	LENGTH (mm)	QTY.	UNIT	RAL COLOR	Total Areal WT. Sq.m. / Kg.	REMARKS	ITEM CODE	RESERVED QTY	ORDERING QTY.	REMARKS
	ALUPCO 56 HINGED WINDOW GIESSE HARDWARE											
1	GIESSE-EURO AWAY CREMONE Handle	GIESSE 01001		210	Set	Black				—	210	
2	GIESSE-EURO REMOVABLE PULL Handle	GIESSE 01130		210	Set	Black				—	210	
3	GIESSE-Flash Base Hinge	GIESSE 00120U		420	Set	RAL-SDF 7046				—	420	
4	Sash Closing Kit	GIESSE 02270		210	Set					—	210	
						TOTAL						

NOTES :

Prepared By:	CHECKED BY	Approved By:			Received By:
Ajmal Koya	Eng. Hisham Mahfouz 13 Aug	Eng. Ahmed Helal	Eng. Hamed	Dr. Sabir	Mr. Mostafa
Senior Designer	Design Manager	Technical Director	Operation Manager	Deputy Executive Manager	Warehouse Dept.

13/05/2023

23

1/6

13.8.23

Assembly List

Date: 10/10/2023 / 16:50
Project: **Al Fakeeh Hospital**

Job number: 10239
Person in Charge: Ajmal

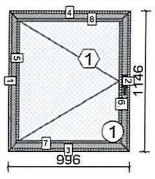

Position: W01

Quantity: 205 Pcs.
System: ALUPCO 56 HINGED

Size: 996 x 1,146 mm

Scale: 1: 50 / Interior View

Weight of Position (w/o Accessories): 39.53 (8,104.39) kg
(29.62 kg Fillings / 9.91 kg Profiles)

Stated quantities refer to one position each.

Frame Element-Corner Connections: Crimp
Window-Corner Connections: Crimp
Drainage: Visible
Colour: RAL SDF 7046 - With 50% Gloss

Hardware of at least one insertion does not fulfil all conditions. Please check selected hardware.

Frame Element

1: Side Hung Window open In - DIN L - Handle Height: Centre (550 mm from sash outer edge)

Hardware: Follow Attached MTO
Sash: 1.1 Weight: 35.3 kg Size: 950 x 1,100 mm
Attention: The hardware set ALUPCO WITHOUT PARTS contains no system fittings.

Glass

Quantity	Width [cm]	Height [cm]	Area [m²]	Description	Number
1 (205) Pcs.	84.8	99.8	0.85	GL-01, 30 mm	1

Gaskets

Drawing	Quantity	Number	Description	Colour
	3.69 (755.92) m	A092033	External Glazing Gasket 3.5MM	
	(855.59) m	A064083E	Shutter Central GasketShutter	
	(865.72) m	A064084E	Gasket	
	(755.92) m	A092013E	internal Glazing Gasket 6MM	

Secondary Profiles and Accessories

Profiles

Drawing	Quantity	Number	Description	Length [mm]	Cut
	2 (410) Pcs.	AT1500	Adaptor Profile	1,146.0	45° - 45°
	2 (410) Pcs.	AT1500	FRAME ~~Adaptor~~ Profile	996.0	45° - 45°
	4 (820) Pcs.	17868	Corner Cleat, Aluminium	27.1	90° - 90°

Assembly List

Date: 10/10/2023 / 16:50
Project: **Al Fakeeh Hospital-Window ACL**

Drawing	Quantity	Number	Description	Length [mm]	Cut
	2 (410) Pcs.	AT1502	Sash Profile	1,100.0	45° - 45°
	2 (410) Pcs.	AT1502	Sash Profile	950.0	45° - 45°
	4 (820) Pcs.	17863	Corner Cleat, Aluminium	7.1	90° - 90°
	4 (820) Pcs.	17868	Corner Cleat, Aluminium	26.5	90° - 90°
	2 (410) Pcs.		20x30x2mm Alum Tube	1,036.0	45° - 45°
	2 (410) Pcs.		20x30x2mm Alum Tube	1,186.0	45° - 45°

Glazing Bead

Drawing	Quantity	Number	Description	Length [mm]	Cut	Colour
	2 (410) Pcs.	41018	Glazing Bead	970.0	90° - 90°	RAL 7046
	(410) Pcs.	41018	Glazing Bead	860.0	90° - 90°	RAL 7046

Cutting List

Date: 10/11/2023 / 07:58
Project: **Al Fakeeh Hospital**

20X30X2mm thk Aluminum Tube
Alupco 62016

Job number: 10239
Person in Charge: Ajmal

Position / Phase	Seq.No.	Quantity	Cutting Length	Orientation	Cut	Notch
20x30x2mm Alum Tube, Colour: RAL 7046						
W01,	AlumTube-TB-01	205	1,036.0 mm	Bottom	45° - 45°	
20x30x2mm Alum Tube, Colour: RAL 7046						
W01,	AlumTube-TB-01	205	1,186.0 mm	Left	45° - 45°	
20x30x2mm Alum Tube, Colour: RAL 7046						
W01,	AlumTube-TB-01	205	1,036.0 mm	Top	45° - 45°	
20x30x2mm Alum Tube, Colour: RAL 7046						
W01,	AlumTube-TB-01	205	1,186.0 mm	Right	45° - 45°	

7/35

Cutting List

Date: 10/11/2023 / 07:58
Project: **Al Fakeeh Hospital-Window ACL**

Job number: 10239
Person in Charge: Ajmal

Position / Phase	Seq.No.	Quantity	Cutting Length	Orientation	Cut	Notch
Cutting and angle data comply with settings of saw: Without Output File						
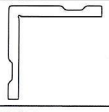 **ALUPCO 17863 Corner Cleat,**						
W01,	0	820	7.1 mm		90° - 90°	
ALUPCO 17868 Corner Cleat,						
W01,	0	820	27.1 mm		90° - 90°	
W01,	0	820	26.5 mm		90° - 90°	
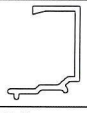 **ALUPCO 41018 Glazing Bead, RAL 7046**						
W01,	1	205	970.0 mm	L / 1	90° - 90°	0 / 0
W01,	2	205	970.0 mm	R / 2	90° - 90°	0 / 0
W01,	3	205	860.0 mm	B / 3	90° - 90°	0 / 0
W01,	4	205	860.0 mm	T / 4	90° - 90°	0 / 0
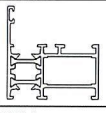 **ALUPCO AT1500 Frame Profile, RAL 7046**						
W01,	1	205	1,146.0 mm	L / 1	45° - 45°	0 / 0
W01,	2	205	1,146.0 mm	R / 2	45° - 45°	0 / 0
W01,	3	205	996.0 mm	B / 3	45° - 45°	0 / 0
W01,	4	205	996.0 mm	T / 4	45° - 45°	0 / 0
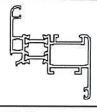 **ALUPCO AT1502 Sash Profile, RAL 7046**						
W01,	5	205	1,100.0 mm	L / 5	45° - 45°	0 / 0
W01,	6	205	1,100.0 mm	R / 6	45° - 45°	0 / 0
W01,	7	205	950.0 mm	B / 7	45° - 45°	0 / 0
W01,	8	205	950.0 mm	T / 8	45° - 45°	0 / 0

Included Positions

Project	Customer	Position	Description
Al Fakeeh Hospital		W01	

Cut Optimisation

Date: 10/11/2023 / 08:01
Project: **Al Fakeeh Hospital**

Job number: 10239
Person in Charge: Ajmal

Follow Attached Optimization (Seperate Atatched)

20x30x2mm Alum Tube
Colour: RAL 7046

Quantity	Cutting Length	Length	Cut
410	**1,036.0**	1,036.0	45° / 45°

20x30x2mm Alum Tube
Colour: RAL 7046

Quantity	Cutting Length	Length	Cut
410	**1,186.0**	1,186.0	45° / 45°

Cut Optimisation

Date: 10/11/2023 / 08:01
Project: **Al Fakeeh Hospital**

Cutting and angle data comply with settings of saw Without Output File.

ALUPCO 17863

2 Pcs. @ 6,000 mm

Corner Cleat, Aluminium
Colour:
Width: 60.0 mm / Height: 60.0
Wastage: 6,178 mm = 51.5 % (Incl. Residual Lengths)

Usable Residual Length: 1,000 mm | Saw Cut Deduction: 5 mm | End Deduction Total: 50 mm

1 x

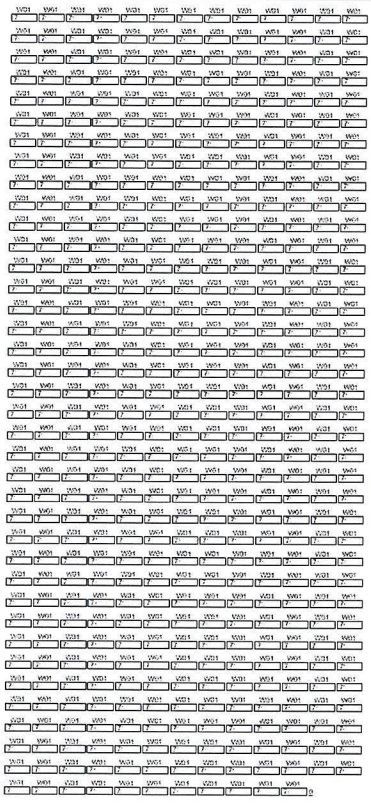

Cut Optimisation

Date: 10/11/2023 / 08:01
Project: **Al Fakeeh Hospital**

1 x

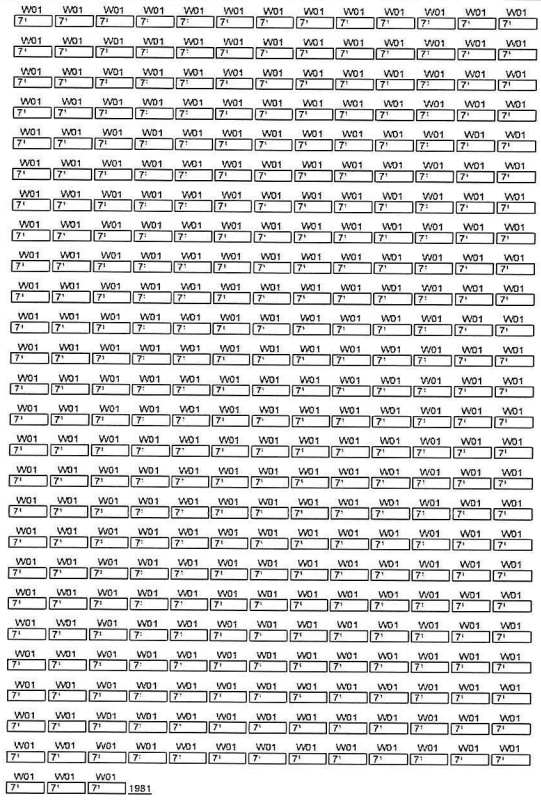

Cut Optimisation

Date: 10/11/2023 / 08:01
Project: **Al Fakeeh Hospital**

Cutting and angle data comply with settings of saw Without Output File.

ALUPCO 17868

9 Pcs. @ 6,000 mm

Corner Cleat, Aluminium
Colour:
Width: 70.0 mm / Height: 70.0
Wastage: 10,048 mm = 18.6 % (Incl. Residual Lengths)

Usable Residual Length: 1,000 mm | Saw Cut Deduction: 5 mm | End Deduction Total: 50 mm

	W01 27¹	W01 27¹	W01 27¹	W01 27¹	W01 27¹	W01 27¹	W01 27¹	W01 27¹	W01 27¹	W01 27¹	W01 27¹	W01 27¹	W01 27¹
	W01 27¹	W01 27¹	W01 27¹	W01 27¹	W01 27¹	W01 27¹	W01 27¹	W01 27¹	W01 27¹	W01 27¹	W01 27¹	W01 27¹	W01 27¹
	W01 27¹	W01 27¹	W01 27¹	W01 27¹	W01 27¹	W01 27¹	W01 27¹	W01 27¹	W01 27¹	W01 27¹	W01 27¹	W01 27¹	W01 27¹
	W01 27¹	W01 27¹	W01 27¹	W01 27¹	W01 27¹	W01 27¹	W01 27¹	W01 27¹	W01 27¹	W01 27¹	W01 27¹	W01 27¹	W01 27¹
	W01 27¹	W01 27¹	W01 27¹	W01 26⁵	W01 26⁵	W01 26⁵	W01 26⁵	W01 26⁵	W01 26⁵	W01 26⁵	W01 26⁵	W01 26⁵	W01 26⁵
	W01 26⁵	W01 26⁵	W01 26⁵	W01 26⁵	W01 26⁵	W01 26⁵	W01 26⁵	W01 26⁵	W01 26⁵	W01 26⁵	W01 26⁵	W01 26⁵	W01 26⁵
	W01 26⁵	W01 26⁵	W01 26⁵	W01 26⁵	W01 26⁵	W01 26⁵	W01 26⁵	W01 26⁵	W01 26⁵	W01 26⁵	W01 26⁵	W01 26⁵	W01 26⁵
5 x	W01 26⁵	W01 26⁵	W01 26⁵	W01 26⁵	W01 26⁵	W01 26⁵	W01 26⁵	W01 26⁵	W01 26⁵	W01 26⁵	W01 26⁵	W01 26⁵	W01 26⁵
	W01 26⁵	W01 26⁵	W01 26⁵	W01 26⁵	W01 26⁵	W01 26⁵	W01 26⁵	W01 26⁵	W01 26⁵	W01 26⁵	W01 26⁵	W01 26⁵	W01 26⁵
	W01 26⁵	W01 26⁵	W01 26⁵	W01 26⁵	W01 26⁵	W01 26⁵	W01 26⁵	W01 26⁵	W01 26⁵	W01 26⁵	W01 26⁵	W01 26⁵	W01 26⁵
	W01 26⁵	W01 26⁵	W01 26⁵	W01 26⁵	W01 26⁵	W01 26⁵	W01 26⁵	W01 26⁵	W01 26⁵	W01 26⁵	W01 26⁵	W01 26⁵	W01 26⁵
	W01 26⁵	W01 26⁵	W01 26⁵	W01 26⁵	W01 26⁵	W01 26⁵	W01 26⁵	W01 26⁵	W01 26⁵	W01 26⁵	W01 26⁵	W01 26⁵	W01 26⁵
	W01 26⁵	W01 26⁵	W01 26⁵	W01 26⁵	W01 26⁵	W01 26⁵	W01 26⁵	W01 26⁵	W01 26⁵	W01 26⁵	W01 26⁵	W01 26⁵	W01 26⁵
	W01 26⁵	W01 26⁵	W01 26⁵	W01 26⁵	W01 26⁵	W01 26⁵	W01 26⁵	W01 26⁵	W01 26⁵	W01 26⁵	W01 26⁵	W01 26⁵	W01 26⁵
	W01 26⁵	W01 26⁵	W01 26⁵	W01 26⁵	W01 26⁵	W01 26⁵	W01 26⁵	W01 26⁵	W01 26⁵	W01 26⁵	W01 26⁵	W01 26⁵	W01 26⁵
	W01 26⁵	W01 26⁵	W01 26⁵	W01 26⁵	W01 26⁵	W01 26⁵	W01 26⁵	W01 26⁵	W01 26⁵	W01 26⁵	W01 26⁵	W01 26⁵	W01 26⁵
	W01 26⁵	W01 26⁵	W01 26⁵	W01 26⁵	W01 26⁵	W01 26⁵	0						

Cut Optimisation

Date: 10/11/2023 / 08:01
Project: **Al Fakeeh Hospital**

3 x

W01 27¹	W01 27¹	W01 27¹	W01 27¹	W01 27¹	W01 27¹	W01 27¹	W01 27¹	W01 27¹	W01 27¹	W01 27¹	W01 27¹	W01 27¹
W01 27¹	W01 27¹	W01 27¹	W01 27¹	W01 27¹	W01 27¹	W01 27¹	W01 27¹	W01 27¹	W01 27¹	W01 27¹	W01 27¹	W01 27¹
W01 27¹	W01 27¹	W01 27¹	W01 27¹	W01 27¹	W01 27¹	W01 27¹	W01 27¹	W01 27¹	W01 27¹	W01 27¹	W01 27¹	W01 27¹
W01 27¹	W01 27¹	W01 27¹	W01 27¹	W01 27¹	W01 27¹	W01 27¹	W01 27¹	W01 27¹	W01 27¹	W01 27¹	W01 27¹	W01 27¹
W01 27¹	W01 27¹	W01 27¹	W01 27¹	W01 27¹	W01 27¹	W01 27¹	W01 27¹	W01 27¹	W01 27¹	W01 27¹	W01 27¹	W01 27¹
W01 27¹	W01 27¹	W01 27¹	W01 27¹	W01 27¹	W01 27¹	W01 27¹	W01 27¹	W01 27¹	W01 27¹	W01 27¹	W01 27¹	W01 27¹
W01 27¹	W01 27¹	W01 27¹	W01 27¹	W01 27¹	W01 27¹	W01 27¹	W01 27¹	W01 27¹	W01 27¹	W01 27¹	W01 27¹	W01 27¹
W01 27¹	W01 27¹	W01 27¹	W01 27¹	W01 27¹	W01 27¹	W01 27¹	W01 27¹	W01 27¹	W01 27¹	W01 27¹	W01 27¹	W01 27¹
W01 27¹	W01 27¹	W01 27¹	W01 27¹	W01 27¹	W01 27¹	W01 27¹	W01 27¹	W01 27¹	W01 27¹	W01 27¹	W01 27¹	W01 27¹
W01 27¹	W01 27¹	W01 27¹	W01 27¹	W01 27¹	W01 27¹	W01 27¹	W01 27¹	W01 27¹	W01 27¹	W01 27¹	W01 27¹	W01 27¹
W01 27¹	W01 27¹	W01 27¹	W01 27¹	W01 27¹	W01 27¹	W01 27¹	W01 27¹	W01 27¹	W01 27¹	W01 27¹	W01 27¹	W01 27¹
W01 27¹	W01 27¹	W01 27¹	W01 27¹	W01 27¹	W01 27¹	W01 27¹	W01 27¹	W01 27¹	W01 27¹	W01 27¹	W01 27¹	W01 27¹
W01 27¹	W01 27¹	W01 27¹	W01 27¹	W01 27¹	W01 27¹	W01 27¹	W01 27¹	W01 27¹	W01 27¹	W01 27¹	W01 27¹	W01 27¹
W01 27¹	W01 27¹	W01 27¹	W01 27¹	W01 26⁵	W01 26⁵	W01 26⁵	W01 26⁵	W01 26⁵	W01 26⁵	W01 26⁵	W01 26⁵	W01 26⁵
W01 26⁵	W01 26⁵	W01 26⁵	W01 26⁵	W01 26⁵	W01 26⁵	W01 26⁵	W01 26⁵	W01 26⁵	W01 26⁵	W01 26⁵	W01 26⁵	W01 26⁵
W01 26⁵	W01 26⁵	W01 26⁵	W01 26⁵	0								

1 x

W01 27¹	W01 27¹	W01 27¹	W01 27¹	W01 27¹	W01 27¹	W01 27¹	W01 27¹	W01 27¹	W01 27¹	W01 27¹	W01 27¹	W01 27¹
W01 27¹	W01 27¹	W01 27¹	W01 27¹	W01 27¹	W01 27¹	W01 27¹	W01 27¹	W01 27¹	W01 27¹	W01 27¹	W01 27¹	W01 27¹
W01 27¹	W01 27¹	W01 27¹	W01 27¹	W01 27¹	W01 27¹	W01 27¹	W01 27¹	W01 27¹	W01 27¹	W01 27¹	W01 27¹	W01 27¹
W01 27¹	W01 27¹	W01 27¹	W01 27¹	W01 27¹	W01 27¹	W01 27¹	W01 27¹	W01 27¹	W01 27¹	W01 27¹	W01 27¹	W01 27¹
W01 27¹	W01 27¹	W01 27¹	W01 27¹	W01 27¹	W01 27¹	W01 27¹	W01 27¹	W01 27¹	W01 27¹	W01 27¹	W01 27¹	W01 27¹
W01 26⁵	W01 26⁵	W01 26⁵	W01 26⁵	W01 26⁵	W01 26⁵	W01 26⁵	W01 26⁵	W01 26⁵	W01 26⁵	W01 26⁵	W01 26⁵	W01 26⁵
W01 26⁵	W01 26⁵	W01 26⁵	W01 26⁵	W01 26⁵	W01 26⁵	W01 26⁵	W01 26⁵	W01 26⁵	W01 26⁵	W01 26⁵	W01 26⁵	W01 26⁵
W01 26⁵	W01 26⁵	W01 26⁵	W01 26⁵	W01 26⁵	W01 26⁵	W01 26⁵	W01 26⁵	W01 26⁵	W01 26⁵	W01 26⁵	W01 26⁵	W01 26⁵
W01 26⁵	W01 26⁵	W01 26⁵	W01 26⁵	W01 26⁵	W01 26⁵	W01 26⁵	W01 26⁵	W01 26⁵	W01 26⁵	W01 26⁵	W01 26⁵	W01 26⁵
W01 26⁵	W01 26⁵	W01 26⁵	W01 26⁵	W01 26⁵	W01 26⁵	W01 26⁵	W01 26⁵	W01 26⁵	W01 26⁵	W01 26⁵	W01 26⁵	W01 26⁵
W01 26⁵	W01 26⁵	W01 26⁵	W01 26⁵	W01 26⁵	W01 26⁵	W01 26⁵	W01 26⁵	W01 26⁵	W01 26⁵	W01 26⁵	W01 26⁵	W01 26⁵
W01 26⁵	W01 26⁵	W01 26⁵	W01 26⁵	W01 26⁵	W01 26⁵	W01 26⁵	W01 26⁵	W01 26⁵	W01 26⁵	W01 26⁵	W01 26⁵	1438

Cut Optimisation

Date: 10/11/2023 / 08:01
Project: **Al Fakeeh Hospital**

Cutting and angle data comply with settings of saw Without Output File.

ALUPCO AT1500

137 Pcs. @ 5,500 mm
Attention: Special Lengths

Frame Profile
Colour: RAL 7046
Width: 48.0 mm / Height: 49.0
Wastage: 14,024 mm = 1.9 % (Incl. Residual Lengths)

Usable Residual Length: 1,000 mm Saw Cut Deduction: 5 mm End Deduction Total: 50 mm

2 x	W01 1146 (2)	W01 1146 (1)	W01 1146 (1)	W01 996 (4)	W01 996 (4)	0
6 x	W01 1146 (1)	W01 1146 (1)	W01 1146 (2)	W01 996 (4)	W01 996 (3)	0
6 x	W01 1146 (2)	W01 1146 (2)	W01 1146 (1)	W01 996 (3)	W01 996 (3)	0
9 x	W01 1146 (2)	W01 1146 (1)	W01 1146 (1)	W01 996 (4)	W01 996 (3)	0
7 x	W01 1146 (2)	W01 1146 (1)	W01 1146 (1)	W01 996 (3)	W01 996 (4)	0
9 x	W01 1146 (2)	W01 1146 (2)	W01 1146 (1)	W01 996 (4)	W01 996 (3)	0
15 x	W01 1146 (2)	W01 1146 (1)	W01 1146 (2)	W01 996 (3)	W01 996 (4)	0
5 x	W01 1146 (1)	W01 1146 (1)	W01 1146 (2)	W01 996 (4)	W01 996 (4)	0
1 x	W01 1146 (1)	W01 1146 (1)	W01 1146 (1)	W01 996 (4)	W01 996 (4)	0
4 x	W01 1146 (2)	W01 1146 (2)	W01 1146 (1)	W01 996 (3)	W01 996 (4)	0
15 x	W01 1146 (2)	W01 1146 (1)	W01 1146 (2)	W01 996 (4)	W01 996 (3)	0
7 x	W01 1146 (1)	W01 1146 (1)	W01 1146 (2)	W01 996 (3)	W01 996 (3)	0
2 x	W01 1146 (1)	W01 1146 (2)	W01 1146 (1)	W01 996 (4)	W01 996 (4)	0
4 x	W01 1146 (2)	W01 1146 (1)	W01 1146 (1)	W01 996 (3)	W01 996 (3)	0
3 x	W01 1146 (1)	W01 1146 (1)	W01 1146 (1)	W01 996 (3)	W01 996 (4)	0
3 x	W01 1146 (1)	W01 1146 (2)	W01 1146 (1)	W01 996 (3)	W01 996 (3)	0
3 x	W01 1146 (2)	W01 1146 (2)	W01 1146 (1)	W01 996 (4)	W01 996 (4)	0
5 x	W01 1146 (2)	W01 1146 (1)	W01 1146 (2)	W01 996 (4)	W01 996 (4)	0
1 x	W01 1146 (2)	W01 1146 (1)	W01 1146 (2)	W01 996 (3)	W01 996 (3)	0

Cut Optimisation

Date: 10/11/2023 / 08:01
Project: **Al Fakeeh Hospital**

7 x	W01 1146 (1) 45 45	W01 1146 (1) 45 45	W01 1146 (2) 45 45	W01 996 (3) 45 45	W01 996 (4) 45 45	0
6 x	W01 1146 (1) 45 45	W01 1146 (2) 45 45	W01 1146 (1) 45 45	W01 996 (3) 45 45	W01 996 (4) 45 45	0
2 x	W01 1146 (2) 45 45	W01 1146 (2) 45 45	W01 1146 (2) 45 45	W01 996 (4) 45 45	W01 996 (4) 45 45	0
3 x	W01 1146 (1) 45 45	W01 1146 (2) 45 45	W01 1146 (2) 45 45	W01 996 (4) 45 45	W01 996 (4) 45 45	0
3 x	W01 1146 (1) 45 45	W01 1146 (2) 45 45	W01 1146 (2) 45 45	W01 996 (4) 45 45	W01 996 (3) 45 45	0
4 x	W01 1146 (1) 45 45	W01 1146 (2) 45 45	W01 1146 (1) 45 45	W01 996 (4) 45 45	W01 996 (3) 45 45	0
2 x	W01 1146 (1) 45 45	W01 1146 (2) 45 45	W01 1146 (2) 45 45	W01 996 (3) 45 45	W01 996 (3) 45 45	0
1 x	W01 1146 (2) 45 45	W01 1146 (2) 45 45	W01 1146 (2) 45 45	W01 996 (3) 45 45	W01 996 (4) 45 45	0
1 x	W01 1146 (1) 45 45	W01 1146 (2) 45 45	W01 1146 (2) 45 45	W01 996 (3) 45 45	W01 996 (4) 45 45	0
1 x	W01 996 (4) 45 45	4449				

Cut Optimisation

Date: 10/11/2023 / 08:01
Project: **Al Fakeeh Hospital**

Cutting and angle data comply with settings of saw Without Output File.

ALUPCO AT1500
28 Pcs. @ 5,100 mm
Attention: Special Lengths

Frame Profile
Colour: RAL 7046
Width: 48.0 mm / Height: 49.0
Wastage: 4,056 mm = 2.8 % (Incl. Residual Lengths)

Usable Residual Length: 1,000 mm | Saw Cut Deduction: 5 mm | End Deduction Total: 50 mm

Attention: Apply following residual length here 5,100 mm!

1 x ⇨ W01 1146 (1) | 45 45 | W01 1146 (1) | 45 45 | W01 996 (3) | 45 45 | W01 996 (3) | 45 45 | 746

Attention: Apply following residual length here 5,100 mm!

1 x ⇨ W01 996 (4) | 45 45 | W01 996 (4) | 45 45 | W01 996 (3) | 45 45 | W01 996 (4) | 45 45 | W01 996 (4) | 45 45 | 45

Attention: Apply following residual length here 5,100 mm!

3 x ⇨ W01 996 (4) | 45 45 | W01 996 (3) | 45 45 | W01 996 (3) | 45 45 | W01 996 (4) | 45 45 | W01 996 (3) | 45 45 | 45

Attention: Apply following residual length here 5,100 mm!

2 x ⇨ W01 996 (4) | 45 45 | W01 996 (3) | 45 45 | W01 996 (4) | 45 45 | W01 996 (4) | 45 45 | W01 996 (3) | 45 45 | 45

Attention: Apply following residual length here 5,100 mm!

1 x ⇨ W01 996 (4) | 45 45 | W01 996 (4) | 45 45 | W01 996 (3) | 45 45 | W01 996 (3) | 45 45 | W01 996 (3) | 45 45 | 45

Attention: Apply following residual length here 5,100 mm!

4 x ⇨ W01 996 (3) | 45 45 | W01 996 (3) | 45 45 | W01 996 (4) | 45 45 | W01 996 (3) | 45 45 | W01 996 (4) | 45 45 | 45

Attention: Apply following residual length here 5,100 mm!

3 x ⇨ W01 996 (4) | 45 45 | W01 996 (4) | 45 45 | W01 996 (3) | 45 45 | W01 996 (3) | 45 45 | W01 996 (4) | 45 45 | 45

Attention: Apply following residual length here 5,100 mm!

1 x ⇨ W01 996 (3) | 45 45 | W01 996 (4) | 45 45 | W01 996 (3) | 45 45 | W01 996 (4) | 45 45 | W01 996 (3) | 45 45 | 45

Attention: Apply following residual length here 5,100 mm!

1 x ⇨ W01 996 (3) | 45 45 | W01 996 (4) | 45 45 | W01 996 (4) | 45 45 | W01 996 (4) | 45 45 | W01 996 (3) | 45 45 | 45

Attention: Apply following residual length here 5,100 mm!

2 x ⇨ W01 996 (3) | 45 45 | W01 996 (4) | 45 45 | W01 996 (3) | 45 45 | W01 996 (3) | 45 45 | W01 996 (4) | 45 45 | 45

Attention: Apply following residual length here 5,100 mm!

2 x ⇨ W01 996 (3) | 45 45 | W01 996 (4) | 45 45 | W01 996 (4) | 45 45 | W01 996 (3) | 45 45 | W01 996 (4) | 45 45 | 45

Attention: Apply following residual length here 5,100 mm!

1 x ⇨ W01 996 (3) | 45 45 | W01 996 (4) | 45 45 | W01 996 (4) | 45 45 | W01 996 (3) | 45 45 | W01 996 (3) | 45 45 | 45

Attention: Apply following residual length here 5,100 mm!

2 x ⇨ W01 996 (3) | 45 45 | W01 996 (4) | 45 45 | W01 996 (3) | 45 45 | W01 996 (4) | 45 45 | W01 996 (4) | 45 45 | 45

Cut Optimisation

Date: 10/11/2023 / 08:01
Project: **Al Fakeeh Hospital**

Attention: Apply following residual length here 5,100 mm!

1 x ⇨

W01	W01	W01	W01	W01	
996 (4)	996 (4)	996 (3)	996 (4)	996 (3)	45
45 45	45 45	45 45	45 45	45 45	

Attention: Apply following residual length here 5,100 mm!

1 x ⇨

W01	W01	W01	W01	W01	
996 (3)	996 (3)	996 (3)	996 (4)	996 (3)	45
45 45	45 45	45 45	45 45	45 45	

Attention: Apply following residual length here 5,100 mm!

1 x ⇨

W01	W01	W01	W01	W01	
996 (4)	996 (3)	996 (4)	996 (4)	996 (4)	45
45 45	45 45	45 45	45 45	45 45	

Attention: Apply following residual length here 5,100 mm!

1 x ⇨

W01	W01	W01	W01	W01	
996 (4)	996 (3)	996 (4)	996 (3)	996 (3)	45
45 45	45 45	45 45	45 45	45 45	

Cut Optimisation

Date: 10/11/2023 / 08:01
Project: **Al Fakeeh Hospital**

Cutting and angle data comply with settings of saw Without Output File.

ALUPCO AT1502
82 Pcs. @ 5,450 mm
Attention: Special Lengths

Sash Profile
Colour: RAL 7046
Width: 56.0 mm / Height: 65.0
Wastage: 12,600 mm = 2.8 % (Incl. Residual Lengths)

Usable Residual Length: 1,000 mm | Saw Cut Deduction: 5 mm | End Deduction Total: 50 mm

3 x	W01 1100 (6,H=550)	W01 1100 (5)	W01 1100 (5)	W01 1100 (6,H=550)	W01 950 (7)	25
2 x	W01 1100 (5)	W01 1100 (6,H=550)	W01 1100 (6,H=550)	W01 1100 (5)	W01 950 (8)	25
2 x	W01 1100 (6,H=550)	W01 1100 (5)	W01 1100 (5)	W01 1100 (5)	W01 950 (8)	25
5 x	W01 1100 (6,H=550)	W01 1100 (6,H=550)	W01 1100 (5)	W01 1100 (6,H=550)	W01 950 (7)	25
5 x	W01 1100 (5)	W01 1100 (6,H=550)	W01 1100 (5)	W01 1100 (6,H=550)	W01 950 (8)	25
5 x	W01 1100 (5)	W01 1100 (5)	W01 1100 (6,H=550)	W01 1100 (6,H=550)	W01 950 (7)	25
4 x	W01 1100 (6,H=550)	W01 1100 (5)	W01 1100 (6,H=550)	W01 1100 (5)	W01 950 (7)	25
9 x	W01 1100 (6,H=550)	W01 1100 (5)	W01 1100 (6,H=550)	W01 1100 (5)	W01 950 (8)	25
7 x	W01 1100 (5)	W01 1100 (6,H=550)	W01 1100 (5)	W01 1100 (5)	W01 950 (7)	25
9 x	W01 1100 (6,H=550)	W01 1100 (6,H=550)	W01 1100 (5)	W01 1100 (6,H=550)	W01 950 (8)	25
3 x	W01 1100 (5)	W01 1100 (5)	W01 1100 (6,H=550)	W01 1100 (6,H=550)	W01 950 (8)	25
9 x	W01 1100 (5)	W01 1100 (6,H=550)	W01 1100 (6,H=550)	W01 1100 (5)	W01 950 (7)	25
4 x	W01 1100 (6,H=550)	W01 1100 (5)	W01 1100 (5)	W01 1100 (6,H=550)	W01 950 (8)	25
2 x	W01 1100 (6,H=550)	W01 1100 (5)	W01 1100 (5)	W01 1100 (5)	W01 950 (7)	25
2 x	W01 1100 (5)	W01 1100 (5)	W01 1100 (6,H=550)	W01 1100 (5)	W01 950 (8)	25
1 x	W01 1100 (5)	W01 1100 (5)	W01 1100 (5)	W01 1100 (6,H=550)	W01 950 (8)	25
1 x	W01 1100 (6,H=550)	W01 1100 (5)	W01 1100 (6,H=550)	W01 1100 (6,H=550)	W01 950 (7)	25
2 x	W01 1100 (5)	W01 1100 (6,H=550)	W01 1100 (5)	W01 1100 (6,H=550)	W01 950 (7)	25
1 x	W01 1100 (6,H=550)	W01 1100 (6,H=550)	W01 1100 (5)	W01 1100 (5)	W01 950 (8)	25

Cut Optimisation

Date: 10/11/2023 / 08:01
Project: **Al Fakeeh Hospital**

1 x	W01 1100 (5)	W01 1100 (6,H=550)	W01 1100 (5)	W01 1100 (5)	W01 950 (8)	25
	45 45	45 45	45 45	45 45	45 45	
1 x	W01 1100 (6,H=550)	W01 1100 (6,H=550)	W01 1100 (6,H=550)	W01 1100 (5)	W01 950 (8)	25
	45 45	45 45	45 45	45 45	45 45	
1 x	W01 1100 (6,H=550)	W01 1100 (6,H=550)	W01 1100 (5)	W01 1100 (5)	W01 950 (7)	25
	45 45	45 45	45 45	45 45	45 45	
1 x	W01 1100 (5)	W01 1100 (5)	W01 1100 (6,H=550)	W01 1100 (5)	W01 950 (7)	25
	45 45	45 45	45 45	45 45	45 45	
1 x	W01 1100 (5)	W01 1100 (6,H=550)	W01 1100 (6,H=550)	W01 1100 (6,H=550)	W01 950 (8)	25
	45 45	45 45	45 45	45 45	45 45	
1 x	W01 950 (7)	4445				
	45 45					

Cut Optimisation

Date: 10/11/2023 / 08:01
Project: **Al Fakeeh Hospital**

Cutting and angle data comply with settings of saw Without Output File.

ALUPCO AT1502
83 Pcs. @ 5,000 mm
Attention: Special Lengths

Sash Profile
Colour: RAL 7046
Width: 56.0 mm / Height: 65.0
Wastage: 8,800 mm = 2.1 % (Incl. Residual Lengths)

Usable Residual Length: 1,000 mm | Saw Cut Deduction: 5 mm | End Deduction Total: 50 mm

Attention: Apply following residual length here 5,000 mm!

8 x W01 1100 (6,H=550) 45 45 | W01 950 (8) 45 45 | W01 950 (8) 45 45 | W01 950 (7) 45 45 | W01 950 (8) 45 45 | 25

Attention: Apply following residual length here 5,000 mm!

1 x W01 1100 (5) 45 45 | W01 950 (7) 45 45 | W01 950 (7) 45 45 | W01 950 (7) 45 45 | W01 950 (8) 45 45 | 25

Attention: Apply following residual length here 5,000 mm!

9 x W01 1100 (5) 45 45 | W01 950 (8) 45 45 | W01 950 (7) 45 45 | W01 950 (8) 45 45 | W01 950 (7) 45 45 | 25

Attention: Apply following residual length here 5,000 mm!

9 x W01 1100 (6,H=550) 45 45 | W01 950 (8) 45 45 | W01 950 (7) 45 45 | W01 950 (7) 45 45 | W01 950 (8) 45 45 | 25

Attention: Apply following residual length here 5,000 mm!

1 x W01 1100 (6,H=550) 45 45 | W01 950 (8) 45 45 | W01 950 (7) 45 45 | W01 950 (8) 45 45 | W01 950 (8) 45 45 | 25

Attention: Apply following residual length here 5,000 mm!

9 x W01 1100 (5) 45 45 | W01 950 (7) 45 45 | W01 950 (8) 45 45 | W01 950 (7) 45 45 | W01 950 (7) 45 45 | 25

Attention: Apply following residual length here 5,000 mm!

5 x W01 1100 (6,H=550) 45 45 | W01 950 (7) 45 45 | W01 950 (7) 45 45 | W01 950 (8) 45 45 | W01 950 (8) 45 45 | 25

Attention: Apply following residual length here 5,000 mm!

2 x W01 1100 (6,H=550) 45 45 | W01 950 (7) 45 45 | W01 950 (8) 45 45 | W01 950 (7) 45 45 | W01 950 (8) 45 45 | 25

Attention: Apply following residual length here 5,000 mm!

1 x W01 1100 (6,H=550) 45 45 | W01 950 (8) 45 45 | W01 950 (8) 45 45 | W01 950 (7) 45 45 | W01 950 (7) 45 45 | 25

Attention: Apply following residual length here 5,000 mm!

4 x W01 1100 (5) 45 45 | W01 950 (7) 45 45 | W01 950 (8) 45 45 | W01 950 (8) 45 45 | W01 950 (7) 45 45 | 25

Attention: Apply following residual length here 5,000 mm!

5 x W01 1100 (5) 45 45 | W01 950 (7) 45 45 | W01 950 (8) 45 45 | W01 950 (7) 45 45 | W01 950 (8) 45 45 | 25

Attention: Apply following residual length here 5,000 mm!

1 x W01 1100 (5) 45 45 | W01 950 (8) 45 45 | W01 950 (7) 45 45 | W01 950 (7) 45 45 | W01 950 (7) 45 45 | 25

Attention: Apply following residual length here 5,000 mm!

5 x W01 1100 (6,H=550) 45 45 | W01 950 (7) 45 45 | W01 950 (8) 45 45 | W01 950 (7) 45 45 | W01 950 (7) 45 45 | 25

20/35

Cut Optimisation

Date: 10/11/2023 / 08:01
Project: **Al Fakeeh Hospital**

Attention: Apply following residual length here 5,000 mm!

1 x

W01	W01	W01	W01	W01	
1100 (5)	950 (8)	950 (8)	950 (7)	950 (8)	25
45 45	45 45	45 45	45 45	45 45	

Attention: Apply following residual length here 5,000 mm!

4 x

W01	W01	W01	W01	W01	
1100 (6,H=550)	950 (8)	950 (7)	950 (8)	950 (7)	25
45 45	45 45	45 45	45 45	45 45	

Attention: Apply following residual length here 5,000 mm!

2 x

W01	W01	W01	W01	W01	
1100 (6,H=550)	950 (8)	950 (8)	950 (8)	950 (7)	25
45 45	45 45	45 45	45 45	45 45	

Attention: Apply following residual length here 5,000 mm!

2 x

W01	W01	W01	W01	W01	
1100 (5)	950 (8)	950 (7)	950 (7)	950 (8)	25
45 45	45 45	45 45	45 45	45 45	

Attention: Apply following residual length here 5,000 mm!

3 x

W01	W01	W01	W01	W01	
1100 (5)	950 (7)	950 (7)	950 (8)	950 (8)	25
45 45	45 45	45 45	45 45	45 45	

Attention: Apply following residual length here 5,000 mm!

3 x

W01	W01	W01	W01	W01	
1100 (6,H=550)	950 (7)	950 (8)	950 (8)	950 (7)	25
45 45	45 45	45 45	45 45	45 45	

Attention: Apply following residual length here 5,000 mm!

1 x

W01	W01	W01	W01	W01	
1100 (5)	950 (8)	950 (8)	950 (7)	950 (7)	25
45 45	45 45	45 45	45 45	45 45	

Attention: Apply following residual length here 5,000 mm!

1 x

W01	W01	W01	W01	W01	
1100 (6,H=550)	950 (7)	950 (7)	950 (8)	950 (7)	25
45 45	45 45	45 45	45 45	45 45	

Attention: Apply following residual length here 5,000 mm!

1 x

W01	W01	W01	W01	W01	
1100 (5)	950 (7)	950 (8)	950 (8)	950 (8)	25
45 45	45 45	45 45	45 45	45 45	

Attention: Apply following residual length here 5,000 mm!

2 x

W01	W01	W01	W01	W01	
1100 (5)	950 (8)	950 (7)	950 (8)	950 (8)	25
45 45	45 45	45 45	45 45	45 45	

Attention: Apply following residual length here 5,000 mm!

2 x

W01	W01	W01	W01	W01	
1100 (5)	950 (8)	950 (8)	950 (8)	950 (7)	25
45 45	45 45	45 45	45 45	45 45	

Attention: Apply following residual length here 5,000 mm!

1 x

W01	W01	W01	W01	
1100 (5)	1100 (6,H=550)	1100 (5)	1100 (5)	530
45 45	45 45	45 45	45 45	

Cut Optimisation

Date: 10/11/2023 / 08:01
Project: **Al Fakeeh Hospital**

Cutting and angle data comply with settings of saw Without Output File.

ALUPCO 41018
137 Pcs. @ 5,600 mm
Attention: Special Lengths

Glazing Bead
Colour: RAL 7046
Width: 19.1 mm / Height: 24.8
Wastage: 16,900 mm = 2.2 % (Incl. Residual Lengths)

Usable Residual Length: 1,000 mm Saw Cut Deduction: 5 mm End Deduction Total: 50 mm

8 x	W01 970 (2)	W01 970 (1)	W01 970 (1)	W01 860 (3)	W01 860 (3)	W01 860 (4)	30
12 x	W01 970 (2)	W01 970 (2)	W01 970 (1)	W01 860 (3)	W01 860 (4)	W01 860 (4)	30
3 x	W01 970 (2)	W01 970 (2)	W01 970 (1)	W01 860 (4)	W01 860 (3)	W01 860 (3)	30
7 x	W01 970 (2)	W01 970 (1)	W01 970 (1)	W01 860 (4)	W01 860 (3)	W01 860 (4)	30
3 x	W01 970 (2)	W01 970 (1)	W01 970 (2)	W01 860 (3)	W01 860 (4)	W01 860 (4)	30
11 x	W01 970 (2)	W01 970 (1)	W01 970 (2)	W01 860 (3)	W01 860 (3)	W01 860 (4)	30
3 x	W01 970 (1)	W01 970 (1)	W01 970 (1)	W01 860 (3)	W01 860 (3)	W01 860 (4)	30
3 x	W01 970 (2)	W01 970 (1)	W01 970 (1)	W01 860 (3)	W01 860 (3)	W01 860 (3)	30
2 x	W01 970 (2)	W01 970 (2)	W01 970 (1)	W01 860 (4)	W01 860 (3)	W01 860 (4)	30
9 x	W01 970 (1)	W01 970 (1)	W01 970 (2)	W01 860 (3)	W01 860 (4)	W01 860 (4)	30
9 x	W01 970 (2)	W01 970 (1)	W01 970 (2)	W01 860 (4)	W01 860 (4)	W01 860 (3)	30
12 x	W01 970 (1)	W01 970 (1)	W01 970 (2)	W01 860 (3)	W01 860 (4)	W01 860 (3)	30
2 x	W01 970 (2)	W01 970 (2)	W01 970 (1)	W01 860 (4)	W01 860 (4)	W01 860 (3)	30
2 x	W01 970 (2)	W01 970 (1)	W01 970 (1)	W01 860 (4)	W01 860 (4)	W01 860 (3)	30
6 x	W01 970 (2)	W01 970 (1)	W01 970 (2)	W01 860 (3)	W01 860 (4)	W01 860 (3)	30
1 x	W01 970 (2)	W01 970 (1)	W01 970 (2)	W01 860 (4)	W01 860 (3)	W01 860 (4)	30
1 x	W01 970 (1)	W01 970 (1)	W01 970 (2)	W01 860 (4)	W01 860 (3)	W01 860 (3)	30
4 x	W01 970 (2)	W01 970 (1)	W01 970 (2)	W01 860 (4)	W01 860 (4)	W01 860 (4)	30
6 x	W01 970 (1)	W01 970 (2)	W01 970 (2)	W01 860 (4)	W01 860 (4)	W01 860 (3)	30
7 x	W01 970 (1)	W01 970 (2)	W01 970 (1)	W01 860 (3)	W01 860 (4)	W01 860 (3)	30
3 x	W01 970 (1)	W01 970 (2)	W01 970 (1)	W01 860 (4)	W01 860 (3)	W01 860 (3)	30
1 x	W01 970 (2)	W01 970 (2)	W01 970 (2)	W01 860 (4)	W01 860 (3)	W01 860 (4)	30
2 x	W01 970 (1)	W01 970 (2)	W01 970 (1)	W01 860 (4)	W01 860 (3)	W01 860 (4)	30
2 x	W01 970 (2)	W01 970 (2)	W01 970 (1)	W01 860 (3)	W01 860 (4)	W01 860 (3)	30
2 x	W01 970 (2)	W01 970 (1)	W01 970 (2)	W01 860 (4)	W01 860 (3)	W01 860 (3)	30
1 x	W01 970 (1)	W01 970 (1)	W01 970 (1)	W01 860 (4)	W01 860 (3)	W01 860 (4)	30

Cut Optimisation

Date: 10/11/2023 / 08:01
Project: **Al Fakeeh Hospital**

3 x	W01 970 (1)	W01 970 (1)	W01 970 (2)	W01 860 (3)	W01 860 (3)	W01 860 (4)	30
2 x	W01 970 (2)	W01 970 (1)	W01 970 (1)	W01 860 (3)	W01 860 (4)	W01 860 (3)	30
1 x	W01 970 (1)	W01 970 (2)	W01 970 (1)	W01 860 (3)	W01 860 (3)	W01 860 (4)	30
2 x	W01 970 (1)	W01 970 (2)	W01 970 (1)	W01 860 (3)	W01 860 (4)	W01 860 (4)	30
1 x	W01 970 (1)	W01 970 (2)	W01 970 (2)	W01 860 (3)	W01 860 (4)	W01 860 (3)	30
1 x	W01 970 (2)	W01 970 (2)	W01 970 (2)	W01 860 (4)	W01 860 (4)	W01 860 (3)	30
1 x	W01 970 (1)	W01 970 (2)	W01 970 (2)	W01 860 (4)	W01 860 (3)	W01 860 (4)	30
1 x	W01 970 (1)	W01 970 (2)	W01 970 (2)	W01 860 (3)	W01 860 (3)	W01 860 (4)	30
1 x	W01 970 (2)	W01 970 (2)	W01 970 (1)	W01 860 (4)	W01 860 (4)	W01 860 (4)	30
1 x	W01 970 (2)	W01 970 (2)	W01 970 (2)	W01 860 (3)	W01 860 (4)	W01 860 (3)	30
1 x	W01 970 (1)	W01 970 (1)	W01 860 (3)	W01 860 (4)	1870		

NOTE → OPTIMIZATION FOR ALUMIUM TUBE
20X30X2 mm → ALUPCO # 62016

Length	Material	Quantity	Label	Waste	Graphic: 1D
6000	20x30x2 mm thk Aluminum Tube-62016	82		45	1186 TB, 1186 TB, 1186 TB, 1186 TB, 1186 TB
5250	20x30x2 mm thk Aluminum Tube-62016	82		45	1036 TB, 1036 TB, 1036 TB, 1036 TB, 1036 TB
5250	20x30x2 mm thk Aluminum Tube-62016	1		786	1186 TB, 1186 TB, 1036 TB, 1036 TB
6000	Aluminum L Angle 15*20*2 mm-61...	26		20	
6000	Aluminum L Angle 15*20*2 mm-61...	1		1580	

Summary

ALUPCO

Number	Description	Colour Inside/Outside	Quantity	Length [mm]	Wastage [mm]	%
17863	Corner Cleat		2	6,000	6,181	51.5
17868	Corner Cleat		9	6,000	10,088	18.7
AT1500	Frame Profile	RAL 7046	137	5,500	14,704	2.0
AT1502	Sash Profile	RAL 7046	82	5,450	12,600	2.8
41018	Glazing Bead	RAL 7046	137	5,600	16,900	2.2

Used Residual Length

Number	Description	Colour Inside/Outside	Quantity	Length [mm]	Wastage [mm]	%
AT1500	Frame Profile	RAL 7046	28	5,100	4,056	2.8
AT1502	Sash Profile	RAL 7046	83	5,000	8,800	2.1

25/35

Rev.	CHECKED	PART NUMBER	DIM 'A'	DIM 'B'	DIM 'C'	DIM 'D'	DIM 'E'	DIM 'F'	Qty.	REMARKS	Bar drawing ✕ / Part drawing

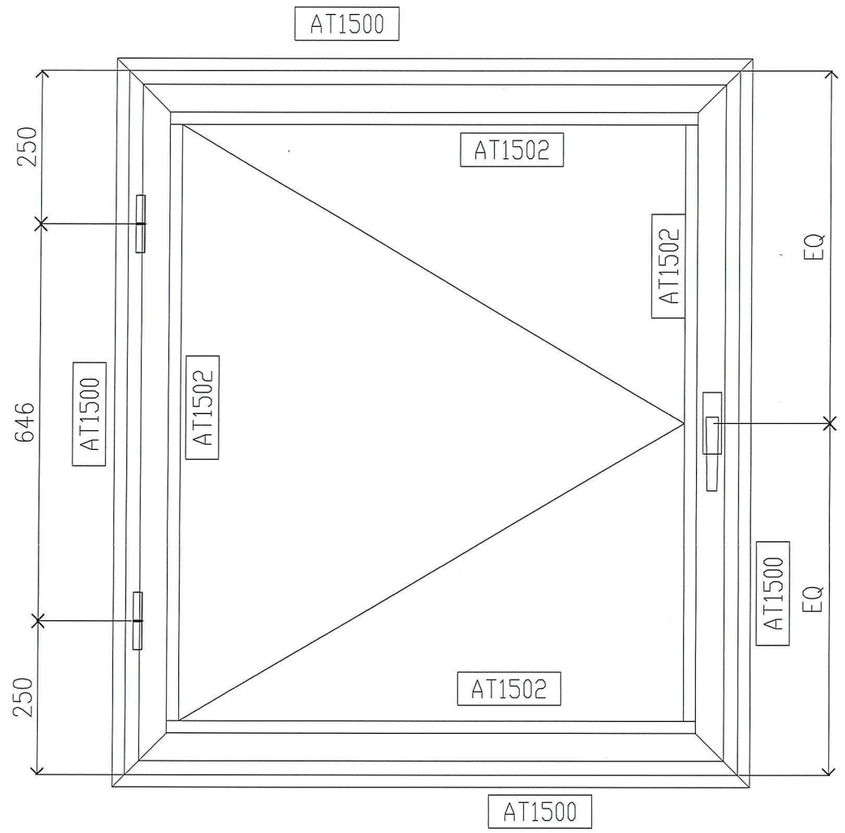

ELEVATION VIEW FROM INSIDE

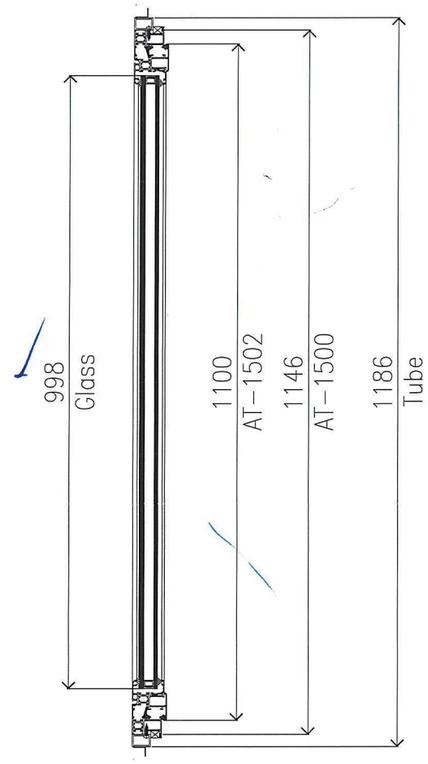

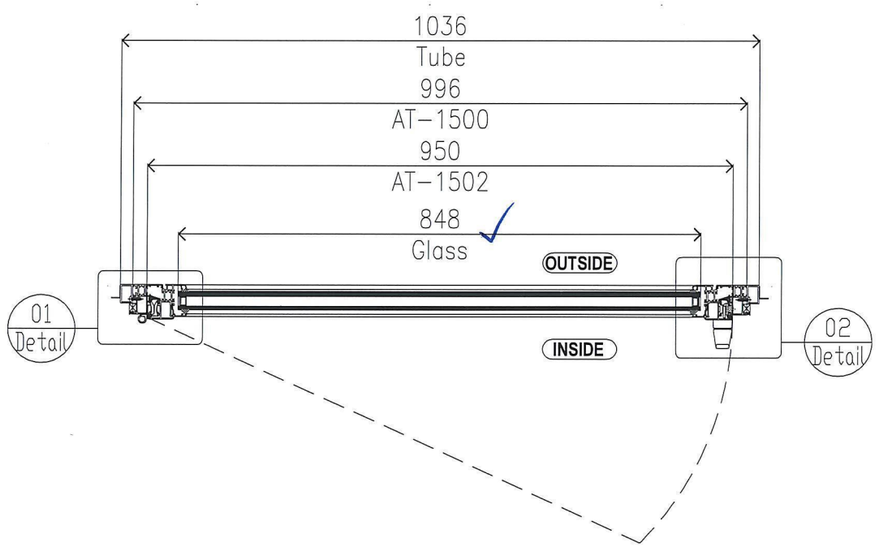

OPEN INSIDE HINGED WINDOW
LOCATION INSIDE CW
TOTAL QTY-205 NOS

26/35

Rev.	Date	Amendment
00	09/02/23	ISSUED FOR PRODUCTION

✕ 1ST ANGLE PROJECTION
3RD ANGLE PROJECTION

Standard Tolerances XX. = ± 1, XXX. = ± 0.5, Angle ± 1, Squareness ± 1

ALUSYSTEMS
ALUMINUM CONSTRUCTION SYSTEMS FACTORY
MOBILE No: 0567233335, 0564444805
E-MAIL: s.alusystems@yahoo.comsales
sales@alusystems.com.sa

Holes: AS SHOWN	W / CENTRE / MACH / SUBA /	Date : 09/02/23	Post Paint ✕	Part ✕	
	Material :	Scale : N.T.S	Pre Paint	Sub Assem.	
Project : Sulaiman Al Fakkeeh Hospital		Finish :		Drawn : AJMAL	
				Checked : HISHAM	
Work Order No. :	Drawing Title : FABRICATION DRAWING	Drawing No. :		Sheet :	Rev. : 0

Rev.	CHECKED	PART NUMBER	DIM 'A'	DIM 'B'	DIM 'C'	DIM 'D'	DIM 'E'	DIM 'F'	Qty.	REMARKS	Bar drawing X / Part drawing

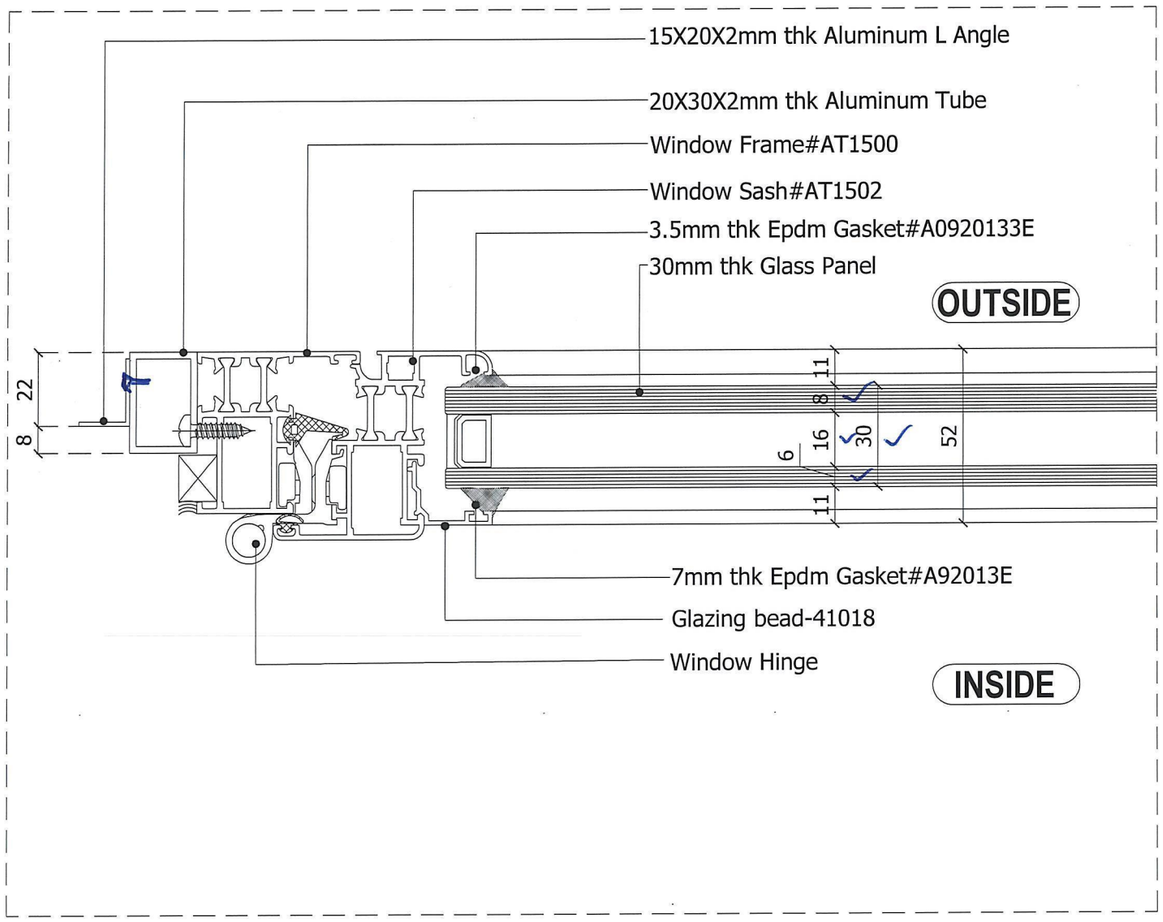

01 Detail **SECTION DETAIL-01**

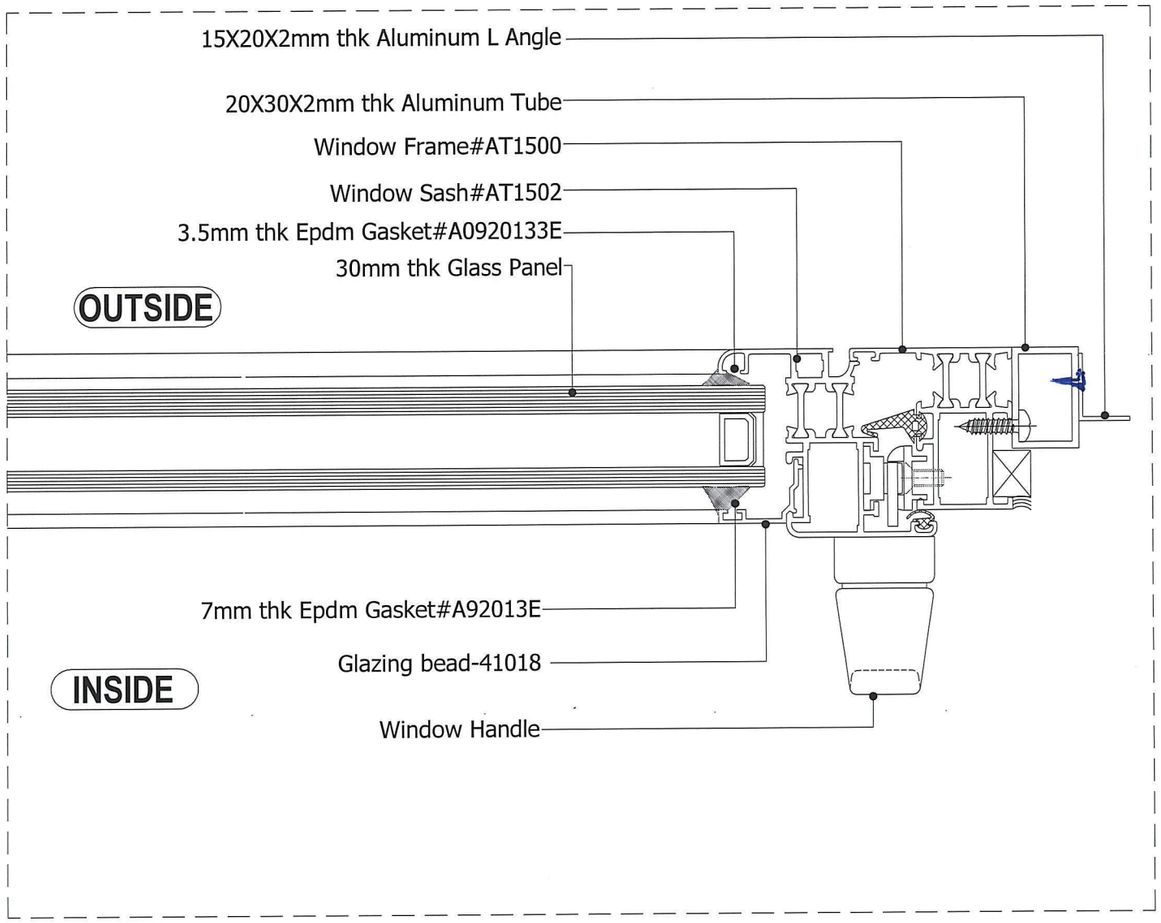

02 Detail **SECTION DETAIL-02**

27/35

			X	1ST ANGLE PROJECTION
				3RD ANGLE PROJECTION
			Standard Tolerances	XX. = ± 1 XXX. = ± 0.5 Angle ± 1 Squareness ± 1
00	09/02/23	ISSUED FOR PRODUCTION		
Rev.	Date	Amendment		

ALUSYSTEMS
ALUMINUM CONSTRUCTION SYSTEMS FACTORY
MOBILE No: 0567233335, 0564444805
E-MAIL: s.alusystems@yahoo.comsales
sales@alusystems.com.sa

Holes: AS SHOWN	W / CENTRE / MACH / SUBA /	Date : 09/02/23	Post Paint	X	Part	X
	Material :	Scale : N.T.S	Pre Paint		Sub Assem.	
Project : Sulaiman Al Fakkeeh Hospital		Finish :			Drawn : AJMAL	
					Checked : HISHAM	
Work Order No. :	Drawing Title : FABRICATION DRAWING		Drawing No. :		Sheet :	Rev. : 0

Rev.	CHECKED	PART NUMBER	DIM 'A'	DIM 'B'	DIM 'C'	DIM 'D'	DIM 'E'	DIM 'F'	Qty.	REMARKS	Bar drawing X / Part drawing

ASSEMBLY DRAWING FOR 20X15X2mm ALUMINUM L ANGLE

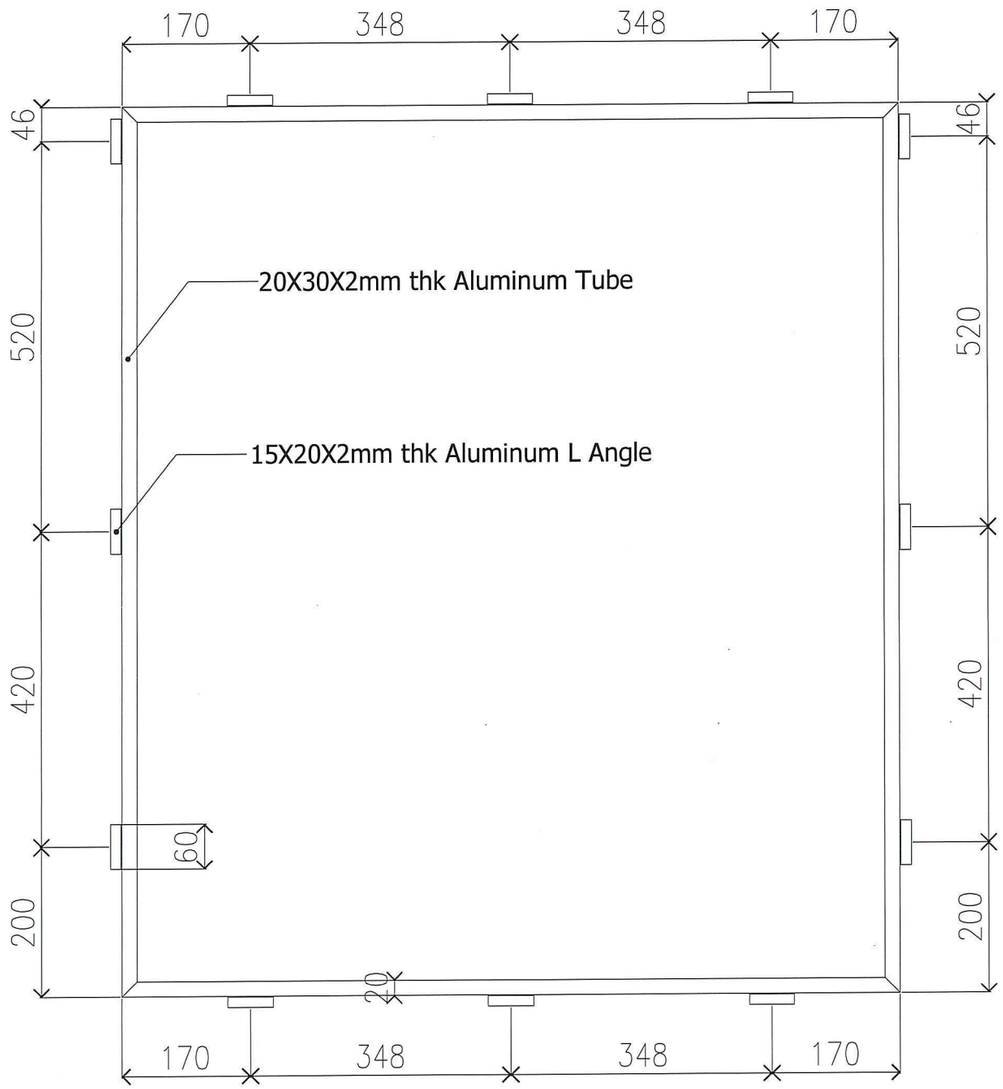

ELEVATION VIEW

TOTAL QTY-172 MARK AS W01-01

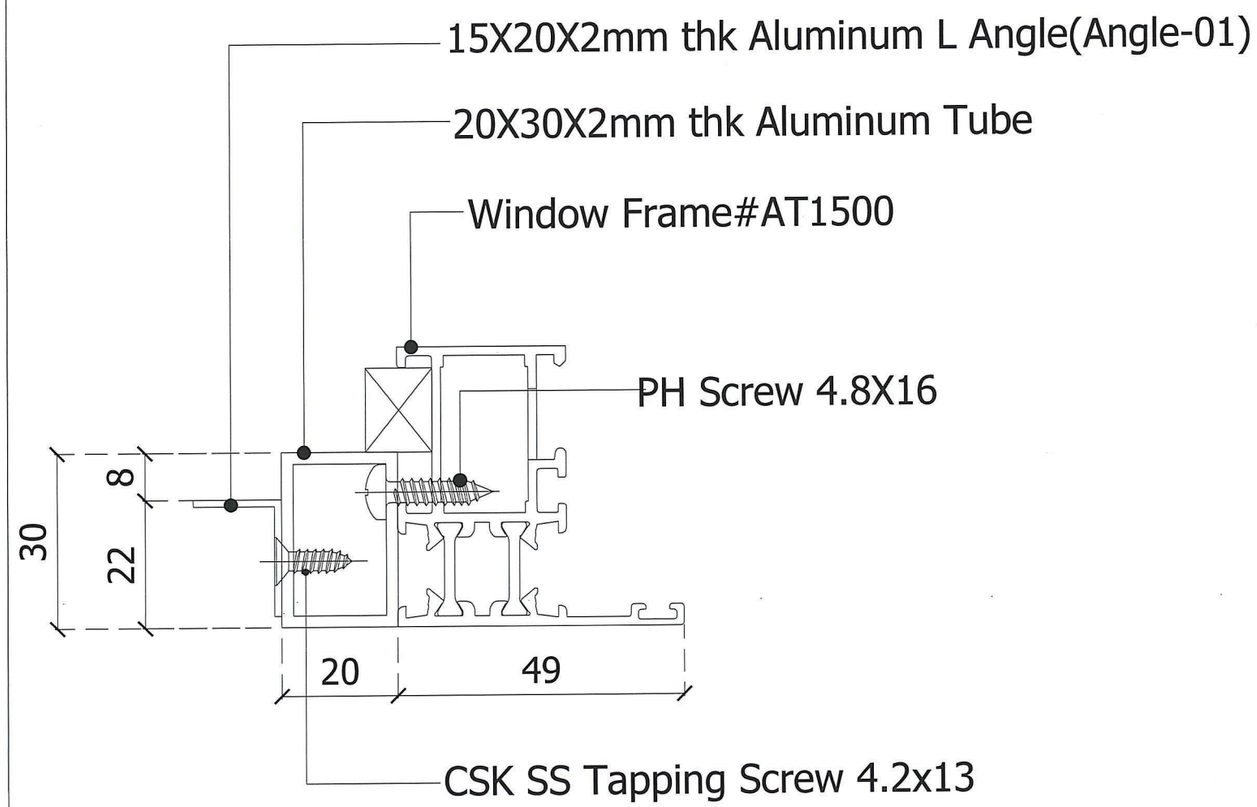

29/35

Rev.	Date	Amendment
00	09/02/23	ISSUED FOR PRODUCTION

X 1ST ANGLE PROJECTION

3RD ANGLE PROJECTION

Standard Tolerances XX. = ± 1, XXX. = ± 0.5

Angle ± 1, Squareness ± 1

ALUSYSTEMS
ALUMINUM CONSTRUCTION SYSTEMS FACTORY
MOBILE No: 0567233335, 0564444805
E-MAIL: s.alusystems@yahoo.comsales
sales@alusystems.com.sa

Holes: AS SHOWN	W / CENTRE / MACH / SUBA /	Date : 09/02/23	Post Paint X	Part X	
	Material :	Scale : N.T.S	Pre Paint	Sub Assem.	
Project : Sulaiman Al Fakkeeh Hospital		Finish :		Drawn : AJMAL	
				Checked : HISHAM	
Work Order No. :	Drawing Title : FABRICATION DRAWING	Drawing No. :		Sheet :	Rev. : 0

Rev.	CHECKED	PART NUMBER	DIM 'A'	DIM 'B'	DIM 'C'	DIM 'D'	DIM 'E'	DIM 'F'	Qty.	REMARKS	Bar drawing X / Part drawing

ASSEMBLY DRAWING FOR 20X15X2mm ALUMINUM L ANGLE

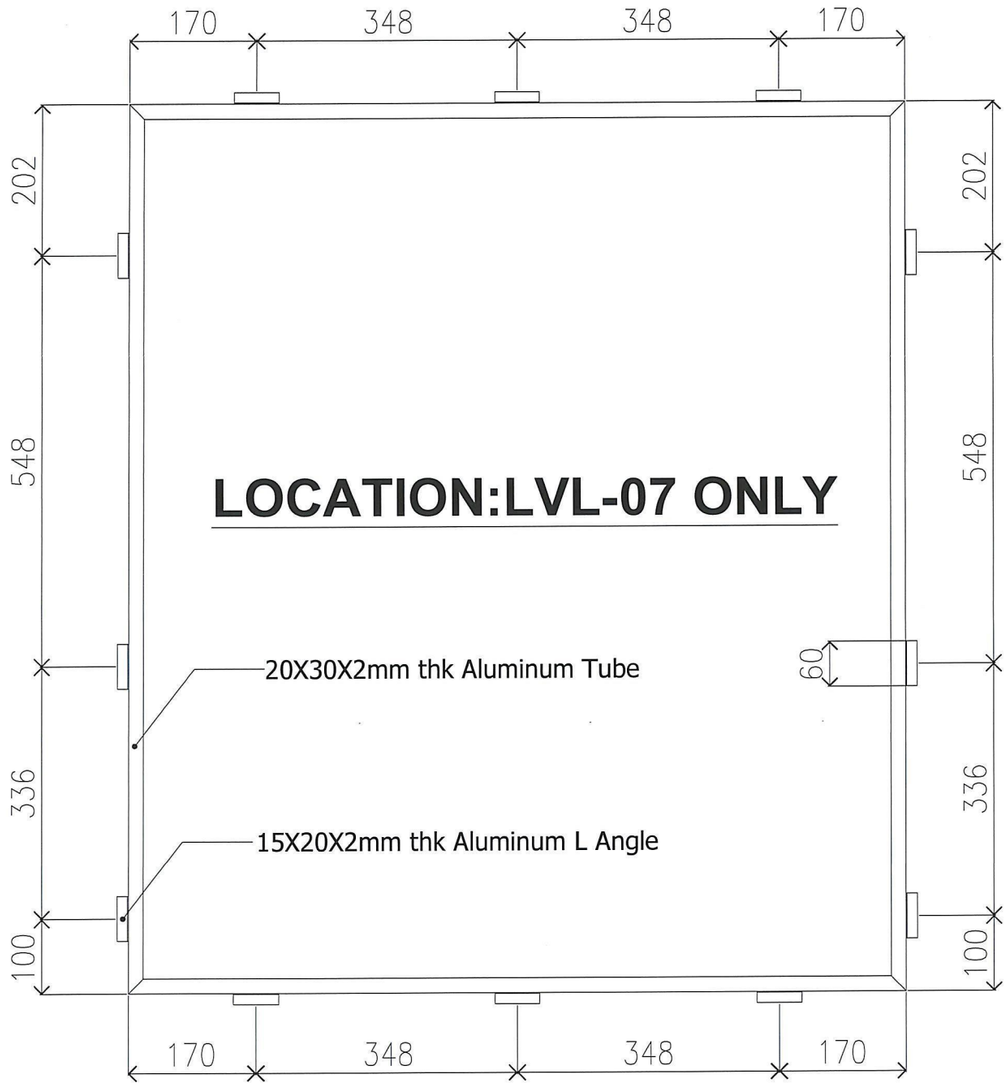

ELEVATION VIEW

TOTAL QTY-33
MARK AS W01-02

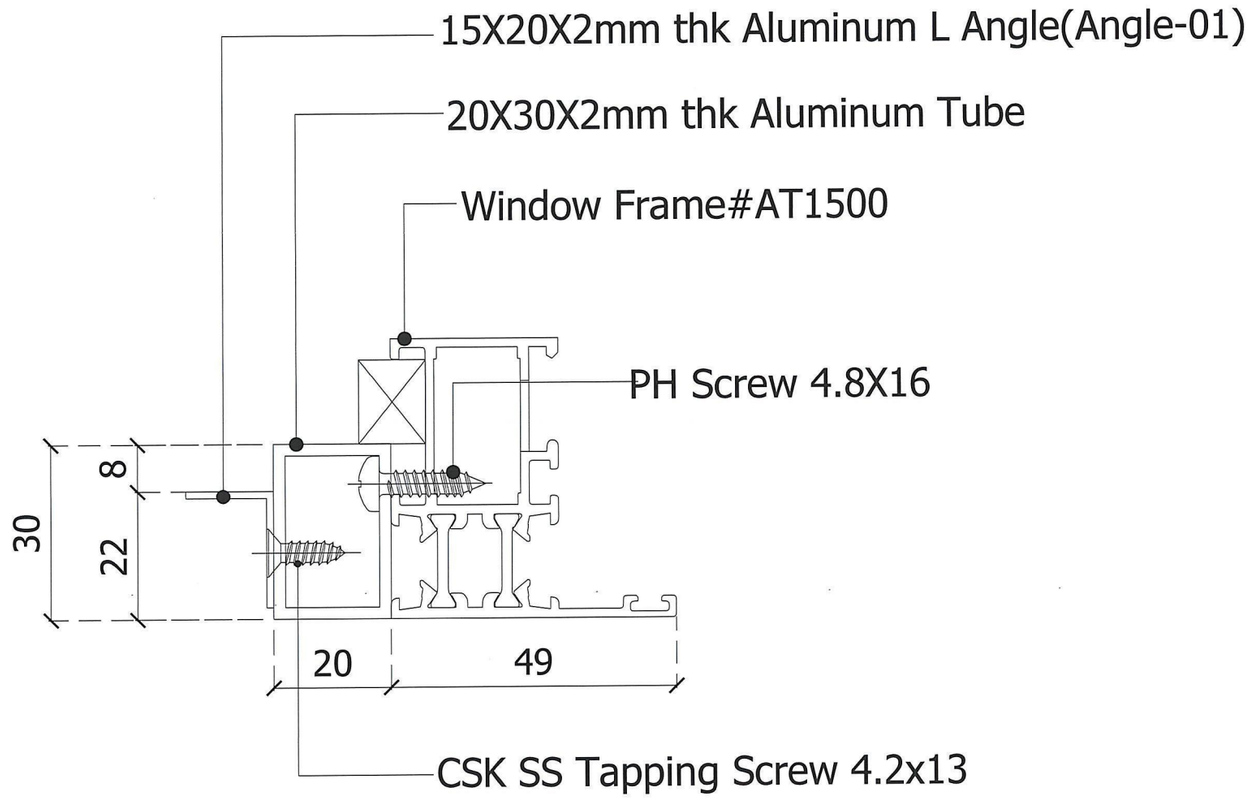

FIXATION DETAIL
20X15X2mm ALUMINUM L ANGLE

29/35

Rev.	Date	Amendment
00	09/02/23	ISSUED FOR PRODUCTION

X 1ST ANGLE PROJECTION
3RD ANGLE PROJECTION

Standard Tolerances XX. = ± 1, XXX. = ± 0.5
Angle ± 1, Squareness ± 1

ALUSYSTEMS
ALUMINUM CONSTRUCTION SYSTEMS FACTORY
MOBILE No: 0567233335, 0564444805
E-MAIL: s.alusystems@yahoo.comsales
sales@alusystems.com.sa

Holes: AS SHOWN	W / CENTRE / MACH / SUBA /	Date : 09/02/23	Post Paint X	Part X	
	Material :	Scale : N.T.S	Pre Paint	Sub Assem.	
Project : Sulaiman Al Fakkeeh Hospital		Finish :		Drawn : AJMAL	
				Checked : HISHAM	
Work Order No. :	Drawing Title : FABRICATION DRAWING	Drawing No. :		Sheet :	Rev. : 0

A | **Partial Elevation Without GRC Panel**
2006 Scale: 1:100

B | **Partial Section**
2006 Scale: 1:100

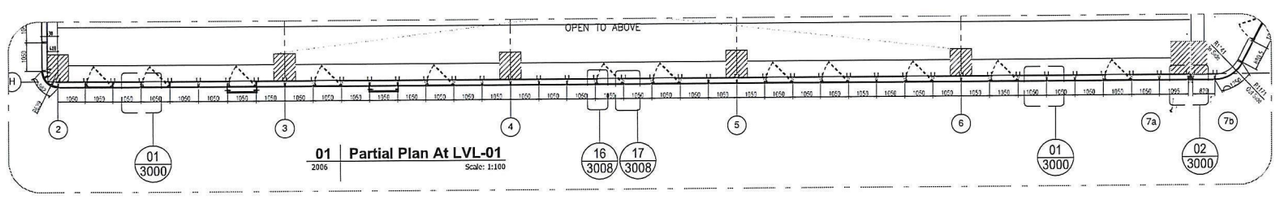

01 | **Partial Plan At LVL-01**
2006 Scale: 1:100

CURTAINWALL SCHEDULE

ITEM REF #	LEVEL	ELEVATION	ZONE	GLASS TYPE	QTY
A-FR-CW-01	1st To 8th	Front	A	As Shown	01

WINDOW SCHEDULE(ALUPCO 56W HINGED WINDOW)

ITEM REF #	Opening Width	Opening Height	ZONE	GLASS TYPE	QTY
CW-01-OP-W	1000	1150	A	GL01C	60

W01-01-50 NOS

W01-1-02 - 10 NOS

30/35

KEYPLAN: NORTH:

GENERAL NOTES:

1. DO NOT SCALE THE DRAWINGS, USE FIGURED DIMENSIONS ONLY.
2. ALL DIMENSIONS ARE IN MILLIMETERS AND ALL LEVELS ARE IN METERS UNLESS OTHERWISE NOTED.
3. ALL DIMENSIONS SHALL BE VERIFIED ON SITE BEFORE PROCEEDING WITH THE WORK.

GL01A — 30mm thk Vision Glass Panel-As Approved; 8mm thk Sunguard SN 40T Tempered Glass; 16mm AIR Space With U Insert; 6mm Clear Tempered

GL01B — 30mm thk Spandrel Glass Panel-As Approved; 8mm thk Sunguard SN 40T Tempered Glass; 16mm AIR Space With U Insert; 6mm thk Clear Tempered With Ceramic Back Painted RAL 7024 Grey (100%)

GL03(CU) — Laminated Curve Glass-As Per Approval; 6mm thk Guardian Light Blue 57+Annealed Glass; 1.52mm thk PVB; 6mm thk Clear Annealed Glass

GL01A(CU) — Curve Glass-As Per Approval; 8mm thk SunGuard® SN 40 T Fully Tempered; 16mm Air Space With 'U' Insert; 6mm thk Clear Glass Fully Tempered

CL01 — Aluminum Cladding(As Approved) ALCOBOND FR Class(A2-s1-d0) Pure White ALC 016

Finish: RAL-SDF-7046 With 50% Gloss (As Approved)

MTS SUBMITAL REFERENCES:

Document Ref.	DESCRIPTION
SF-ALU-MT-ARC-GEN-001-R02	MTS FOR 4-SIDED STRL GLAZED CURTAIN WALL
SF-ALU-MT-ARC-GEN-002-R02	MTS FOR GLAZING
SF-ALU-STR-ARC-GEN-001	STRL CALCULATION FOR DOUBLE HEIGHT WITH GRC
SF-ALU-STR-ARC-GEN-003	STRL CALCULATION FOR FRONTALLEFT ELEVATION

SUBMITTAL REVISIONS:

NO.	DATE	BY	DESCRIPTION
02	15-06-2023	AJM	SUBMITTAL FOR APPROVAL
01	18-05-2023	AJM	SUBMITTAL FOR APPROVAL
00	28-03-2023	AJM	SUBMITTAL FOR APPROVAL

CONSULTANT APPROVAL

APPROVAL STATUS

A	B	C	D
APPROVED	APPROVED AS NOTED	AMMEND AND RESUBMIT	DISAPPROVED

ENGINEER	NAME	SIGNATURE
ARCHITECT & PROJECT COORDINATOR		
STRUCTURE		
ELECTRICAL		
MECHANICAL		
SURVEYOR		
PROJECT MANAGER		

OWNER

EXECUTIVE MANAGER	ENG/ Amr Gomaa
PROJECT MANAGER	ENG/ Ahmad Basyouni
PROJECT DIRECTOR	ENG/ Osama Hussaiwa

PROJECT NAME: مستشفى الدكتور سليمان الفقية
مبنى وقف الاستاذ عبد الباري الشاوي

CLIENT: شركة الطور للخدمات الطبية — فقيه

DESIGNER: الدار الدولية للهندسة DAR ENGINEERING
Olaya Street 7552, 13326 Riyadh, Saudi Arabia

CONSULTANT: مكتب عبد الرزاق حكيم للاستشارات الهندسية
ABDULRAZAK HAKEEM CONSULTING ENGINEERS
AL HEZAM ROAD, MADWAH K.S.A
TEL: 048486449
P.O. BOX: 20317 FAX: 048486449
Email:hakeemarch@hotmail.com

MAIN CONTRACTOR: شركة الخريجي للتجارة والمقاولات — ELKHEREIJI
Elkhereiji Commerce & Contracting Co.
mail@elkhereiji.com www.elkhereiji.com
P.O.Box 31728, Jeddah 21497, Kingdom of Saudi Arabia

SUB CONTRACTOR: شركة مصنع الطبة الألومنيوم الإنشائي المحدودة
ALUMINUM CONSTRUCTION SYSTEMS FACTORY CO. LTD.
Riyadh - Al Sahab - Exit 19
Kingdom of Saudi Arabia
Mob: +966 567 213 235
Mob: +966 544 444 495

PROJECT COORDINATOR	ENG/ Hamdi Ahmed
CONSTRUCTION MANAGER	ENG/ Waleed Gamal
PROJECT MANAGER	ENG/ Hany N Sayegh

DRAWING TYPE: SHOP DRAWING

DRAWING TITLE:
Partial Plan,Elevation and Section
CW01-MASTER ELEVATION

DRAWING NO:
SFHM-EK-280-SUP-SD-AL101-**2006**

DRAWING BY:	AJM	SUBMITTAL NO:	SFHM-EK-SUP-AL101		
CHEKED BY:	HM				
VERIFIED BY:	M. SH	SCALE: AS.SH	SIZE: A1	DATE: 15-06-2023	REVISION NO: 02
APPROVED BY:	Eng. Hosny I				

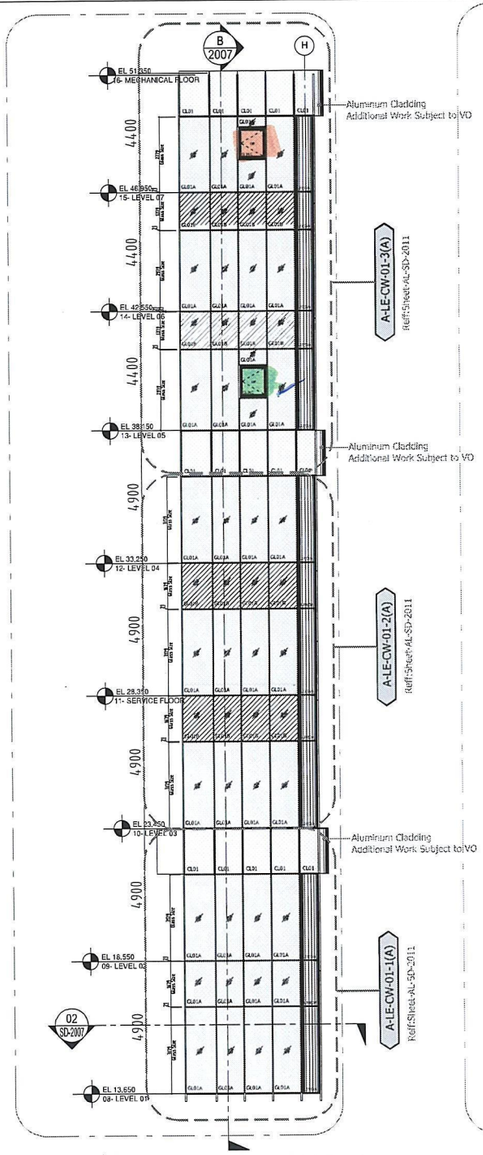

A 2007 **Partial Elevation Without GRC Panel**
Scale: 1:100

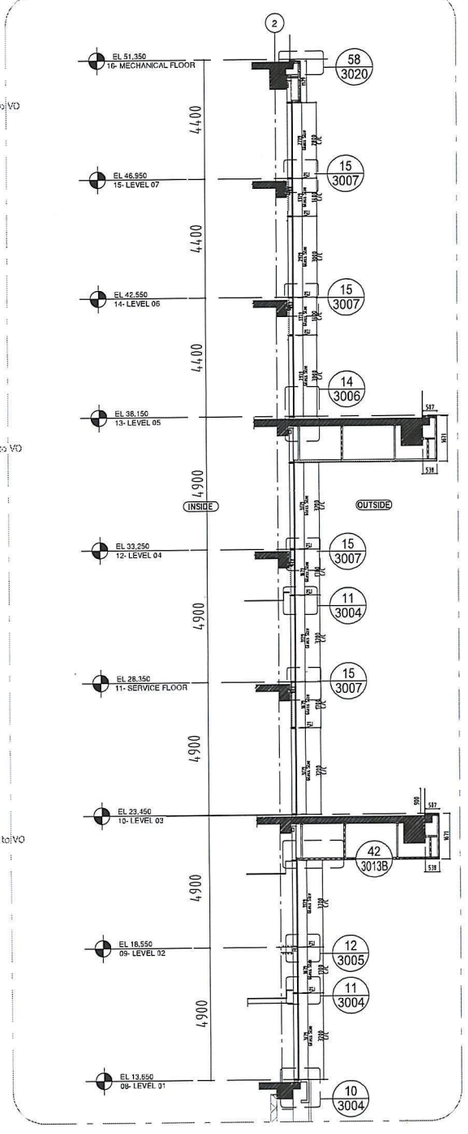

B 2007 **Partial Section**
Scale: 1:100

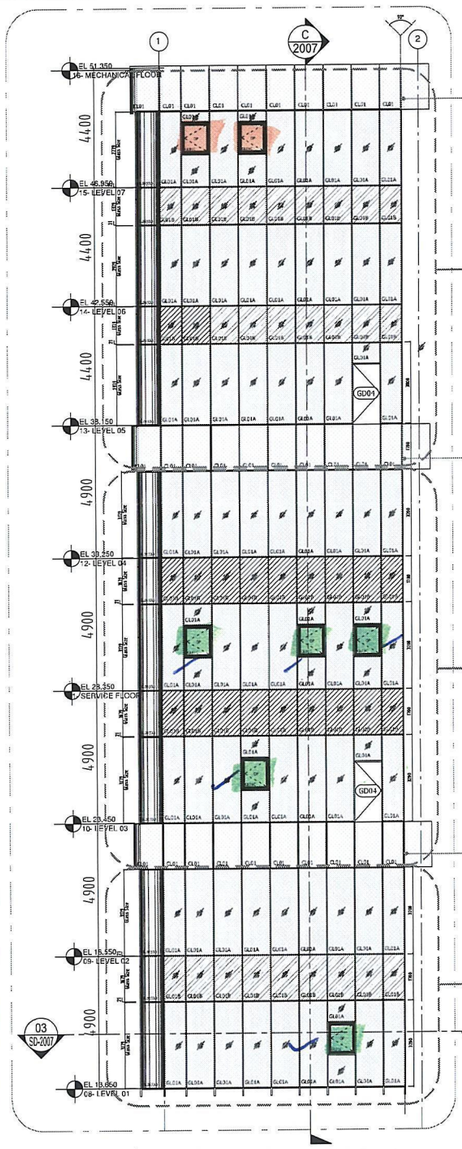

B 2007 **Partial Elevation Without GRC Panel**
Scale: 1:100

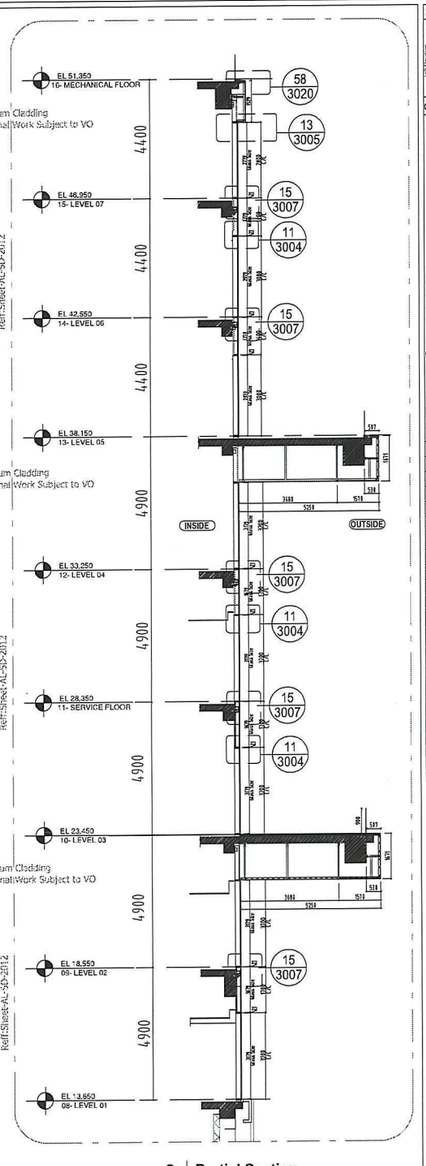

C 2007 **Partial Section**
Scale: 1:100

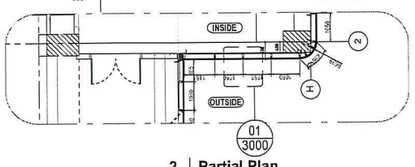

2 2007 **Partial Plan**
Scale: 1:100

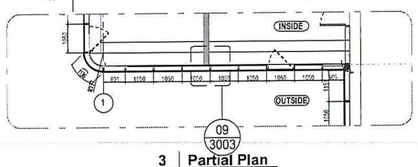

3 2007 **Partial Plan**
Scale: 1:100

No-1-1-6

No 1-2-3

31/35

CURTAINWALL SCHEDULE					
ITEM REF #	LEVEL	ELEVATION	ZONE	GLASS TYPE	QTY
A-LE-CW-01A	1st To 8th	Left	A	As Shown	01

WINDOW SCHEDULE(ALUPCO 56W HINGED WINDOW)					
ITEM REF #	Opening Width	Opening Height	ZONE	GLASS TYPE	QTY
CW-01-A-OP-W	1000	1150	A	GL01C	02

CURTAINWALL SCHEDULE					
ITEM REF #	LEVEL	ELEVATION	ZONE	GLASS TYPE	QTY
A-FR-CW-01B	1st To 8th	Left	A	As Shown	01

WINDOW SCHEDULE(ALUPCO 56W HINGED WINDOW)					
ITEM REF #	Opening Width	Opening Height	ZONE	GLASS TYPE	QTY
CW-01-B-OP-W	1000	1150	A	GL01C	07

KEYPLAN: NORTH:

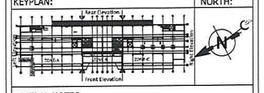

GENERAL NOTES:

1. DO NOT SCALE THE DRAWINGS, USE FIGURED DIMENSIONS ONLY.
2. ALL DIMENSIONS ARE IN MILLIMETERS AND ALL LEVELS ARE IN METERS UNLESS OTHERWISE NOTED.
3. ALL DIMENSIONS SHALL BE VERIFIED ON SITE BEFORE PROCEEDING WITH THE WORK.

GL01A	30mm thk Vision Glass Panel-As Approved 8mm thk Sunguard SN 40T Tempered Glass 16mm AIR Space With U Insert 6mm Clear Tempered
GL01B	30mm thk Spandrel Glass Panel-As Approved 8mm thk Sunguard SN 40T Tempered Glass 16mm AIR Space With U Insert 6mm thk Clear Tempered With Ceramic Back Painted RAL 7024 Grey (100%)
GL03(CU)	Laminated Curve Glass-As Per Approval 6mm thk Guardian Light Blue 52+Annealed Glass 1.52mm thk PVB 6mm thk Clear Annealed Glass
GL01A(CU)	Curve Glass-As Per Approval 8mm thk SunGuard® SN 40 T Fully Tempered 16mm Air Space With 'U' Insert 6mm thk Clear Glass Fully Tempered
CL01	Aluminum Cladding(As Approved) ALCOBOND FR Class(A2-s1-d0) Pure White ALC 016

Finish: RAL-SDF-7046 With 50% Gloss (As Approved)

MTS SUBMITTAL REFERENCES:

Document Ref.	DESCRIPTION
SFH-ALU-MAT-ARC-GEN-001-R02	MTS FOR 4-SIDED STRL GLAZED CURTAIN WALL
SFH-ALU-MAT-ARC-GEN-002-R02	MTS FOR GLAZING
SFH-ALU-STRL-ARC-GEN-001	STRL CALCULATION FOR DOUBLE HEIGHT WITH GRC
SFH-ALU-STRL-ARC-GEN-003	STRL CALCULATION FOR FRONTALLEFT ELEVATION

SUBMITTAL REVISIONS:

NO.	DATE	BY	DESCRIPTION
02	15-05-2023	AJM	SUBMITTAL FOR APPROVAL
01	19-05-2023	AJM	SUBMITTAL FOR APPROVAL
00	28-03-2022	AJM	SUBMITTAL FOR APPROVAL

CONSULTANT APPROVAL

APPROVAL STATUS

A	B	C	D
APPROVED	APPROVED AS NOTED	AMEND AND RESUBMIT	DISAPPROVED

ENGINEER	NAME	SIGNATURE
ARCHITECT & PROJECT COORDINATOR		
STRUCTURE		
ELECTRICAL		
MECHANICAL		
SURVEYOR		
PROJECT MANAGER		

OWNER	
EXECUTIVE MANAGER	ENG/ Amr Gomaa
PROJECT MANAGER	ENG/ Ahmad Bayouni
PROJECT DIRECTOR	ENG/ Osama Mutawee

PROJECT NAME:
مستشفى الدكتور سليمان الفقية
مبنى وقف الاستاذ عبد الباري الشاوي

CLIENT:
شركة الطور للخدمات الطبية
فقيه

DESIGNER:
الدار الدولية للهندسة
DAR ENGINEERING
Olaya Street 7552, 13326 Riyadh, Saudi Arabia
CR: 1010 [illegible]
VAT: 300[illegible]

CONSULTANT:
ABDULRAZAK HAKEEM
مكتب عبد الرزاق حكيم للاستشارات الهندسية
CONSULTING ENGINEERS
AL HEZAM ROAD, MADINAH K.S.A
TEL. 048486449
P.O. BOX. 20337 FAX. 048486449
Email:hakeemarch@hotmail.com

MAIN CONTRACTOR:
الخريجي
ELKHEREIJI
شركة الخريجي للتجارة والمقاولات
Elkhereiji Commerce & Contracting Co.
Riyadh - Al Sahab - Exit 18
Kingdom of Saudi Arabia
Mob: +966 547 272 275
Mob: +966 564 844 095

SUB CONTRACTOR:
شركة مصنع قطعة الألومنيوم الخشبي المحدودة
ALUMINUM GRAVITY SECTION WITH PAINTING CO. LTD.
Riyadh - Al Sahab - Exit 18
Kingdom of Saudi Arabia
Mob: +966 547 272 275
Mob: +966 564 844 095

PROJECT COORDINATOR	ENG/ Hamdi Ahmed
CONSTRUCTION MANAGER	ENG/ Waleed Gamal
PROJECT MANAGER	ENG/ Hany Al Sayegh

DRAWING TYPE:
SHOP DRAWING

DRAWING TITLE:
Partial Plan,Elevation and Section
CW01(A),CW01(B)
Master Elevation

DRAWING NO:
SFHM-EK-280-SUP-SD-AL101-**2007**

DRAWING BY:	AJM	SUBMITTAL NO:			
CHEKED BY:	HM	SFHM-EK-SUP-AL101			
VERIFIED BY:	M. SH	SCALE: AS.SH	SIZE: A1	DATE: 15-05-2023	REVISION NO: 02
APPROVED BY:	Eng. Hanry I				

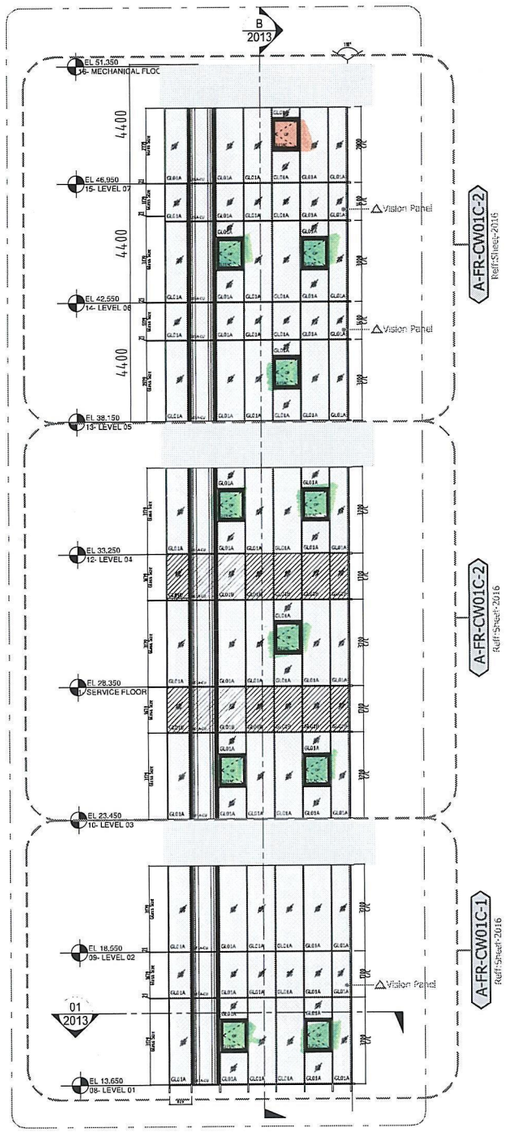

A 2013 **Partial Elevation Without GRC Panel**
Scale: 1:100

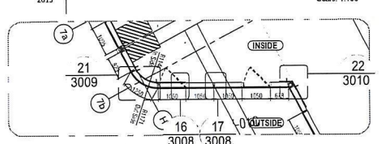

01 2013 **Partial Plan At LVL-01**
Scale: 1:100

CURTAINWALL SCHEDULE					
ITEM REF#	LEVEL	ELEVATION	ZONE	GLASS TYPE	QTY
B-FR-CW-01C	1st To 8th	Front	B	As Shown	01

WINDOW SCHEDULE(ALUPCO 56W HINGED WINDOW)					
ITEM REF#	Opening Width	Opening Height	ZONE	GLASS TYPE	QTY
CW-01C-OP-W	1000	1150	A	GL01AC	11

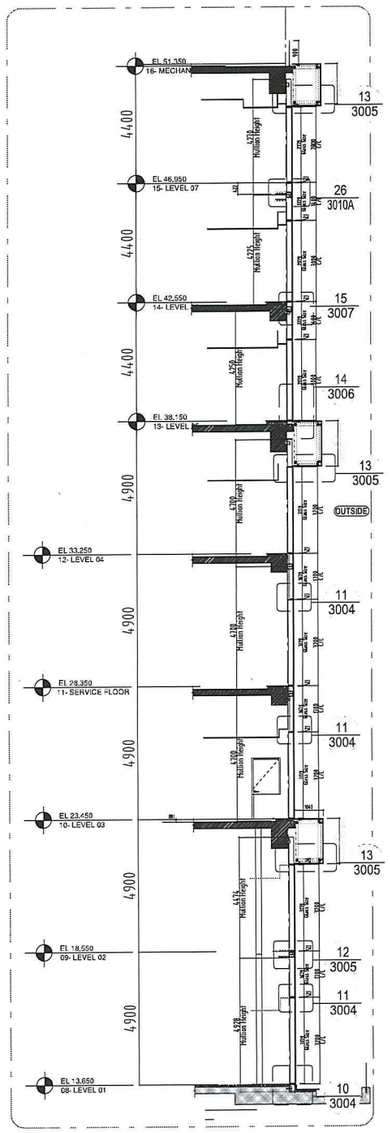

B 2013 **Partial Section**
Scale: 1:100

W01-1 — 19

W01-2 — 3

32/35

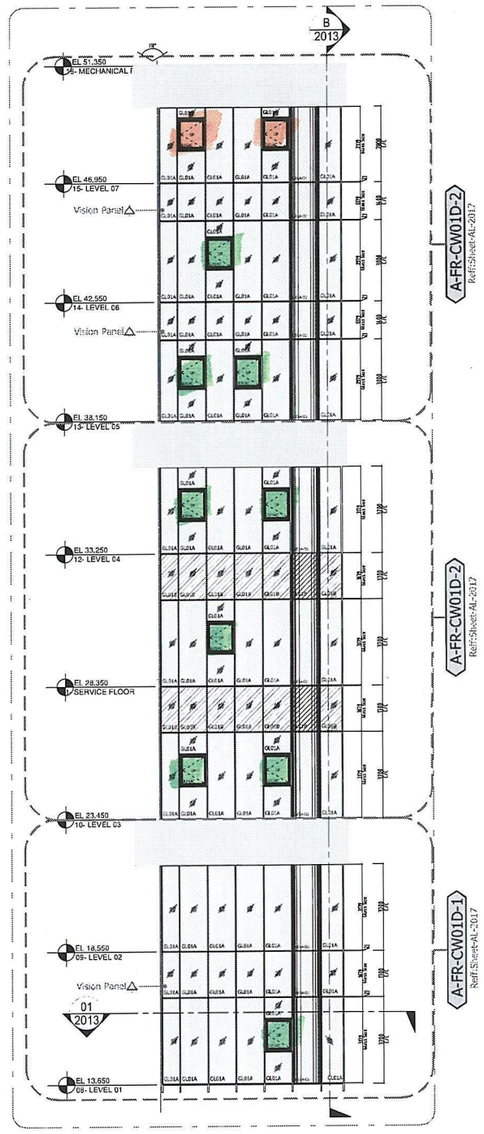

A 2013 **Partial Elevation Without GRC Panel**
Scale: 1:100

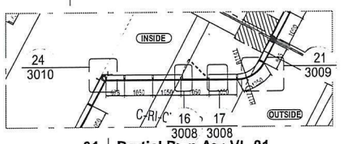

01 2013 **Partial Plan At LVL-01**
Scale: 1:100

CURTAINWALL SCHEDULE					
ITEM REF#	LEVEL	ELEVATION	ZONE	GLASS TYPE	QTY
B-FR-CW-01D	1st To 8th	Front	B	As Shown	01

WINDOW SCHEDULE(ALUPCO 56W HINGED WINDOW)					
ITEM REF#	Opening Width	Opening Height	ZONE	GLASS TYPE	QTY
CW-01D-OP-W	1000	1150	A	GL01AC	11

KEYPLAN: NORTH:

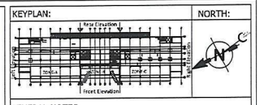

GENERAL NOTES:

1. DO NOT SCALE THE DRAWINGS, USE FIGURED DIMENSIONS ONLY.
2. ALL DIMENSIONS ARE IN MILLIMETERS AND ALL LEVELS ARE IN METERS UNLESS OTHERWISE NOTED.
3. ALL DIMENSIONS SHALL BE VERIFIED ON SITE BEFORE PROCEEDING WITH THE WORK.

GL01A	30mm thk Vision Glass Panel-As Approved 8mm thk Sunguard SN 40T Tempered Glass 16mm AIR Space With U Insert 6mm Clear Tempered
GL01B	30mm thk Spandrel Glass Panel-As Approved 8mm thk Sunguard SN 40T Tempered Glass 16mm AIR Space With U Insert 6mm thk Clear Tempered With Ceramic Back Painted RAL 7024 Grey (100%)
GL03(CU)	Laminated Curve Glass-As Per Approval 6mm thk Guardian Light Blue 52+Annealed Glass 1.52mm thk PVB 6mm thk Clear Annealed Glass
GL01A(CU)	Curve Glass-As Per Approval 8mm thk SunGuard® SN 40 T Fully Tempered 16mm Air Space With 'U' Insert 6mm thk Clear Glass Fully Tempered

Finish: JOTUN SDF As Per Approval

MTS SUBMITTAL REFERENCES:

Document Ref.	DESCRIPTION
SF-ALH-MAT-ARC-GZN-001-R01	MTS FOR 4-SIDED STRL GLAZED CURTAIN WALL
SF-ALH-MAT-ARC-GZN-002-R01	MTS FOR GLAZING
SF-ALH-STRL-ARG-GEN-001	STRL CALCULATION FOR DOUBLE HEIGHT WITH GRC
SF-ALH-STRL-ARG-GEN-001	STRL CALCULATION FOR FRONT/LEFT ELEVATION

SUBMITTAL REVISIONS:

NO.	DATE	BY	DESCRIPTION
04	10-06-2023	AJM	SUBMITTAL FOR APPROVAL
04	07-06-2023	AJM	SUBMITTAL FOR APPROVAL
00	28-03-2023	AJM	SUBMITTAL FOR APPROVAL

CONSULTANT APPROVAL

APPROVAL STATUS

A	B	C	D
APPROVED	APPROVED AS NOTED	AMEND AND RESUBMIT	DISAPPROVED

ENGINEER	NAME	SIGNATURE
ARCHITECT & PROJECT COORDINATOR		
STRUCTURE		
ELECTRICAL		
MECHANICAL		
SURVEYOR		
PROJECT MANAGER		

OWNER

EXECUTIVE MANAGER	ENG/ Amr Gomaa
PROJECT MANAGER	ENG/ Ahmad Bayoumi
PROJECT DIRECTOR	ENG/ Osama Hussein

PROJECT NAME: مستشفى الدكتور سليمان الفقية
مبنى وقف الاستاذ عبد الباري الشاوي

CLIENT: شركة الطور للخدمات الطبية
Fakeeh Care

DESIGNER: الدار الهندسية للهندسة
DAR ENGINEERING
Olaya Street 7552, 13326 Riyadh, Saudi Arabia
AECOM
HOW DAR CRA
ELICO - JEA - A
SAUDI - LEDCO - PORTICAL

CONSULTANT: مكتب عبد الرزاق حكيم للاستشارات الهندسية
ABDULRAZAK HAKEEM
CONSULTING ENGINEERS
AL HEZAM ROAD, MADINAH K.S.A
TEL: 048486649
P.O. BOX: 2032/ FAX: 048486649
Email:hakeemarch@hotmail.com

MAIN CONTRACTOR: شركة الخريجي للتجارة والمقاولات
الخريجي ELKHEREIJI
Elkhereiji Commerce & Contracting Co.
Email:info@elkhereiji.com www.elkhereiji.com
P.O.Box 41726, Jeddah 21561, Kingdom of Saudi Arabia

SUB CONTRACTOR: شركة مصنع الألمنيوم الإنشائي المحدودة
ALUMINUM CONSTRUCTION SYSTEMS FACTORY CO. LTD.
Riyadh - Al Sulai - Exit 19
Kingdom of Saudi Arabia
Mob: +966 567 213 235
Mob: +966 564 044 095

PROJECT COORDINATOR	ENG/ Hamdi Ahmed
CONSTRUCTION MANAGER	ENG/ Waleed Gamal
PROJECT MANAGER	ENG/ Hany Al Sayegh

DRAWING TYPE: SHOP DRAWING

DRAWING TITLE:
Partial Plan,Elevation and Section
CW01C&CW01D-MASTER ELEVATION

DRAWING NO:
SFHM-EK-280-SUP-SD-AL103-**2013**

DRAWING BY:	AJM	SUBMITTAL NO:				
CHECKED BY:	HM	SFHM-EK-SUP-AL103				
VERIFIED BY:	M. SH	SCALE:	SIZE:	DATE:	REVISION NO:	
APPROVED BY:	Eng. Hosny I	AS.SH	A1	10-06-2023	01	

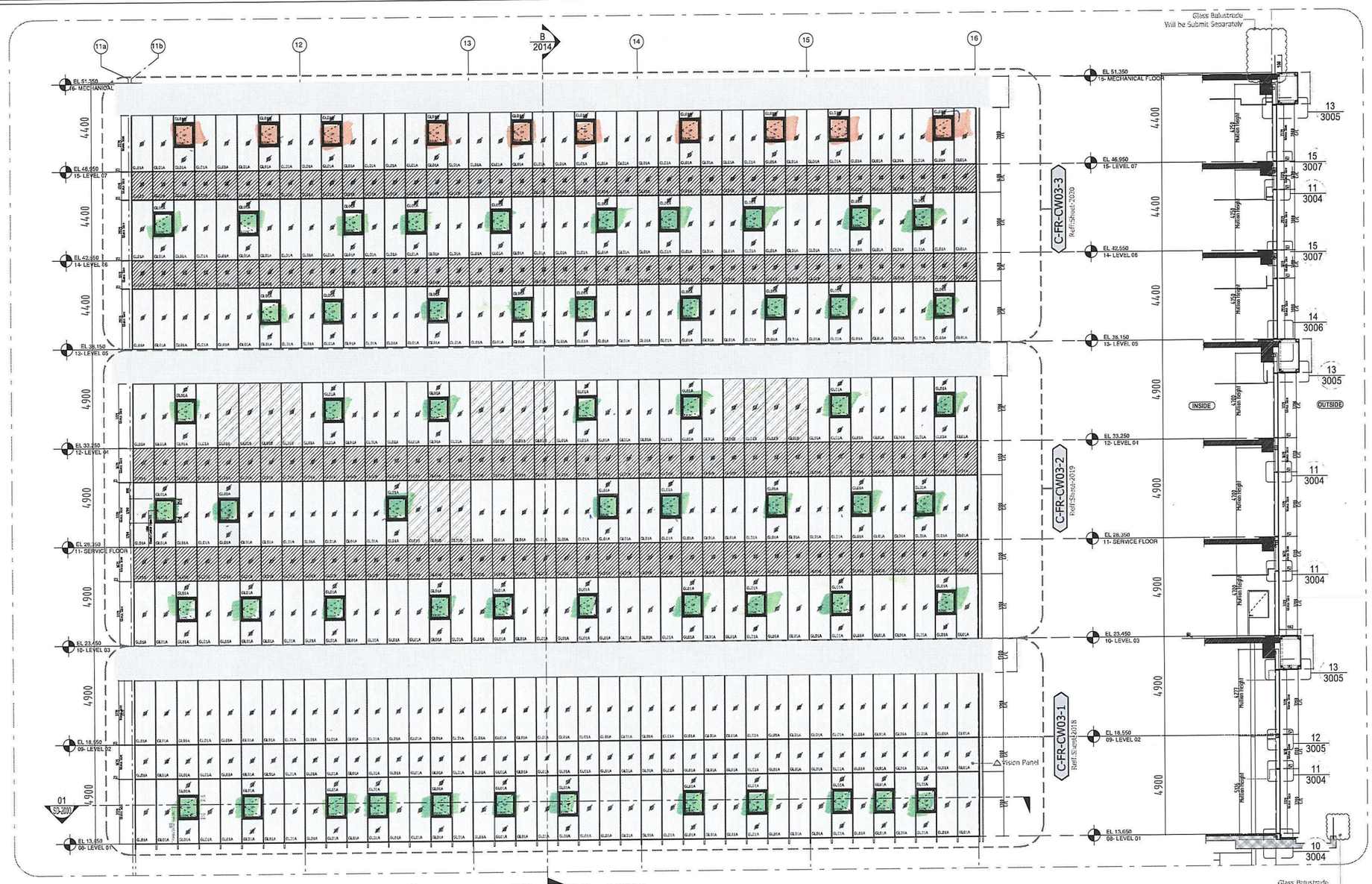

A 2014 | **Partial Elevation Without GRC Panel-CW03**
Scale: 1:100

B 2014 | **Partial Section**
Scale: 1:100

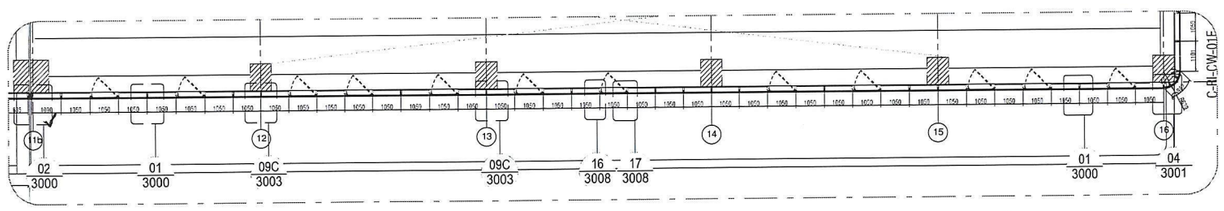

01 2014 | **Partial Plan At LVL-01**
Scale: 1:100

CURTAINWALL SCHEDULE					
ITEM REF #	LEVEL	ELEVATION	ZONE	GLASS TYPE	QTY
C-FR-CW-03	1st To 8th	Front	C	As Shown	01

WINDOW SCHEDULE(ALUPCO 56W HINGED WINDOW)					
ITEM REF #	Opening Width	Opening Height	ZONE	GLASS TYPE	QTY
CW-03-OP-W	1000	1150	C	GL01AC	66

W01-1-56

W01-2-10

KEYPLAN: NORTH:

GENERAL NOTES:

1. DO NOT SCALE THE DRAWINGS, USE FIGURED DIMENSIONS ONLY.
2. ALL DIMENSIONS ARE IN MILLIMETERS AND ALL LEVELS ARE IN METERS UNLESS OTHERWISE NOTED.
3. ALL DIMENSIONS SHALL BE VERIFIED ON SITE BEFORE PROCEEDING WITH THE WORK.

GL01A — 30mm thk Vision Glass Panel-As Approved
8mm thk Sunguard SN 40T Tempered Glass
16mm AIR Space With U Insert
6mm Clear Tempered

GL01B — 30mm thk Spandrel Glass Panel-As Approved
8mm thk Sunguard SN 40T Tempered Glass
16mm AIR Space With U Insert
6mm thk Clear Tempered With Ceramic Back Painted RAL 7004 Grey (100%)

GL03(CU) — Laminated Curve Glass-As Per Approval
6mm thk Guardian Light Blue 57+Annealed Glass
1.52mm thk PVB
6mm thk Clear Annealed Glass

GL01A(CU) — Curve Glass-As Per Approval
8mm thk SunGuard® SN 40 T Fully Tempered
16mm Air Space With 'U' Insert
6mm thk Clear Glass Fully Tempered

Finish: JOTUN SDF As Per Approval

MTS SUBMITTAL REFERENCES:

Document Ref.	DESCRIPTION
SFH-ALU-MAT-ARC-GEN-001-R01	MTS FOR 4-SIDED STRL GLAZED CURTAIN WALL
SFH-ALU-MAT-ARC-GEN-002-R02	MTS FOR GLAZING
SFH-ALU-STRL-ARC-GEN-001	STRL CALCULATION FOR DOUBLE HEIGHT WITH GRC
SFH-ALU-STRL-ARC-GEN-002	STRL CALCULATION FOR FRONT/LEFT ELEVATION

SUBMITTAL REVISIONS:

NO.	DATE	BY	DESCRIPTION
01	10-06-2023	AJM	SUBMITTAL FOR APPROVAL
01	07-06-2023	AJM	SUBMITTAL FOR APPROVAL
00	28-03-2023	AJM	SUBMITTAL FOR APPROVAL

CONSULTANT APPROVAL

APPROVAL STATUS

A	B	C	D
APPROVED	APPROVED AS NOTED	AMMEND AND RESUBMIT	DISAPPROVED

ENGINEER	NAME	SIGNATURE
ARCHITECT & PROJECT COORDINATOR		
STRUCTURE		
ELECTRICAL		
MECHANICAL		
SURVEYOR		
PROJECT MANAGER		

OWNER

EXECUTIVE MANAGER	ENG/ Amr Gomaa
PROJECT MANAGER	ENG/ Ahmad Bayoum
PROJECT DIRECTOR	ENG/ Osama Mujawar

PROJECT NAME: مستشفى الدكتور سليمان الفقية
مبنى وقف الاستاذ عبد الباري الشاوى

CLIENT: شركة الطور للخدمات الطبية — فقيه

DESIGNER: الدار الهندسية للهندسة DAR ENGINEERING
Olaya Street 7552, 13326 Riyadh, Saudi Arabia

CONSULTANT: مكتب عبد الرزاق حكيم للاستشارات الهندسية
ABDULRAZAK HAKEEM CONSULTING ENGINEERS
AL HEZAM ROAD, MADINAH K.S.A
TEL. 048486649
P.O. BOX 2037 FAX. 048486649
Email:hakeemarch@hotmail.com

MAIN CONTRACTOR: الخريجي للتجارة والمقاولات — ELKHEREIJI
Elkhereiji Commerce & Contracting Co.

SUB CONTRACTOR: شركة مصنع قطبة الأمم مقبول الشمري للمقاولة
ALKHEMAH CONSTRUCTION SYSTEMS FACTORY CO. LTD.
Riyadh - Al Sahab - Exit 19
Kingdom of Saudi Arabia
Mob.: +966 567 223 235
Mob.: +966 544 864 895

PROJECT COORDINATOR	ENG/ Hamdi Ahmed
CONSTRUCTION MANAGER	ENG/ Waleed Gamal
PROJECT MANAGER	ENG/ Hany Al Sayegh

DRAWING TYPE: SHOP DRAWING

DRAWING TITLE:
Partial Plan,Elevation and Section
CW03-MASTER ELEVATION

DRAWING NO:
SFHM-EK-280-SUP-SD-AL103-2014

DRAWING BY:	AJM	SUBMITTAL NO: SFHM-EK-SUP-AL103			
CHECKED BY:	HM				
VERIFIED BY:	M. SH	SCALE: AS.SH	SIZE: A1	DATE: 10-06-2023	REVISION NO: 01
APPROVED BY:	Eng. Hosny I				

33/35

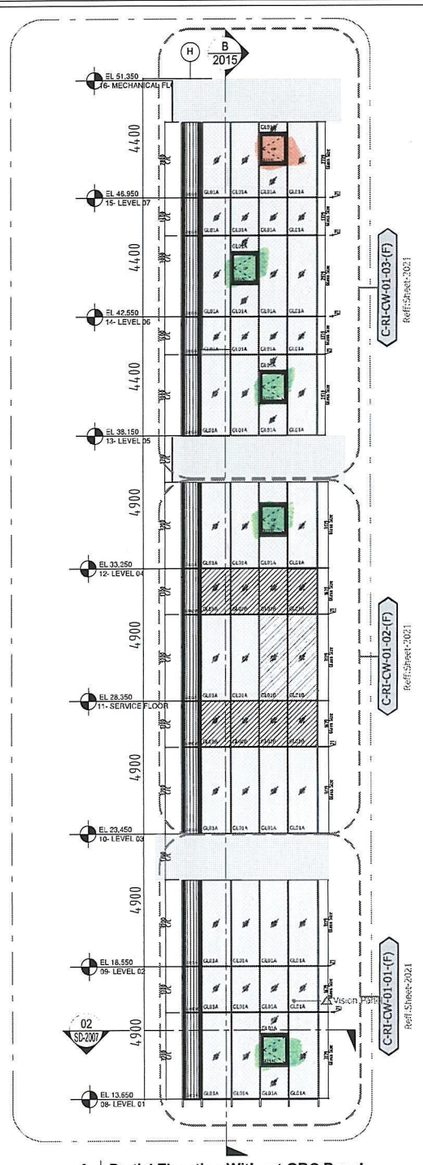

A 2015 | **Partial Elevation Without GRC Panel**
Scale: 1:100

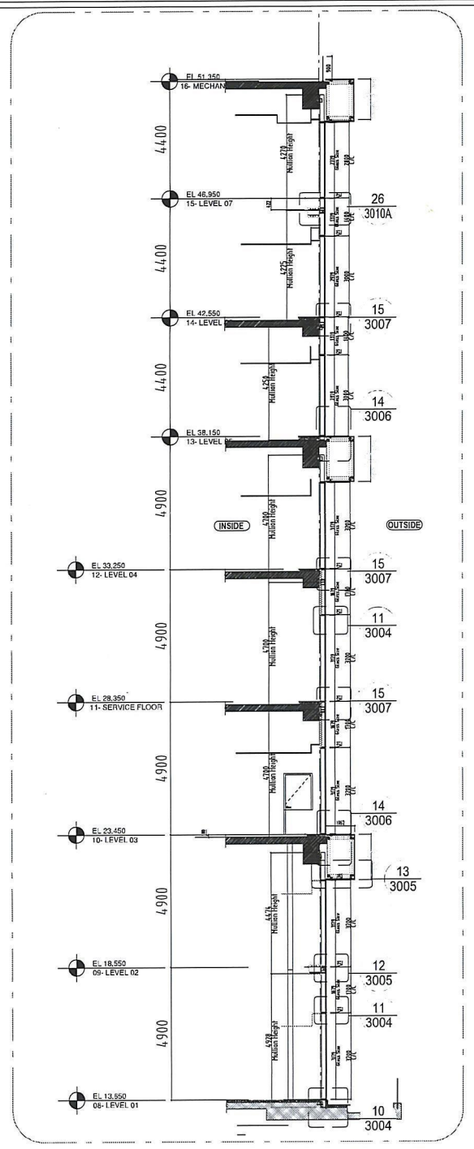

B 2015 | **Partial Section**
Scale: 1:100

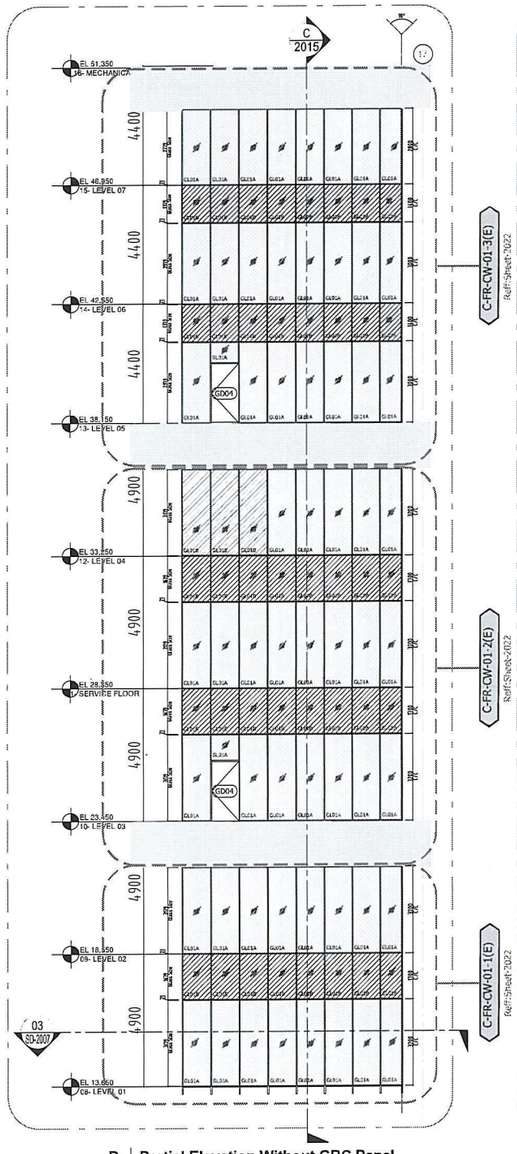

B 2015 | **Partial Elevation Without GRC Panel**
Scale: 1:100

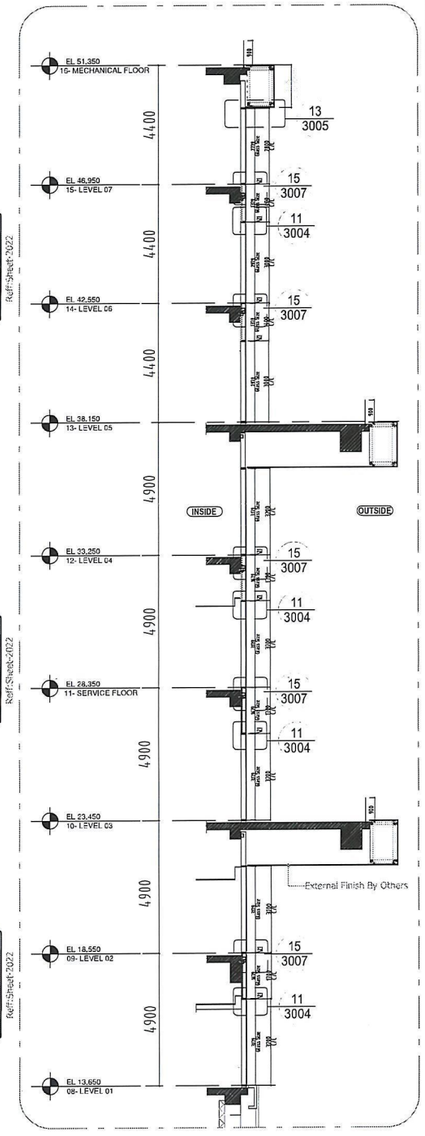

C 2015 | **Partial Section**
Scale: 1:100

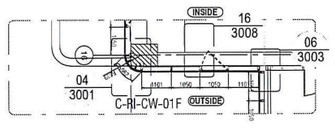

2 2015 | **Partial Plan**
Scale: 1:100

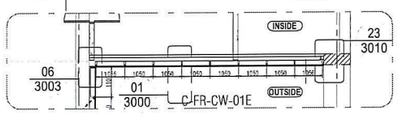

3 2015 | **Partial Plan**
Scale: 1:100

W01-1 — 4

W01-2 — 1

34/35

CURTAINWALL SCHEDULE					
ITEM REF#	LEVEL	ELEVATION	ZONE	GLASS TYPE	QTY
C-RI-CW-01F	1st To 8th	RIGHT	C	As Shown	01

WINDOW SCHEDULE(ALUPCO 56W HINGED WINDOW)					
ITEM REF#	Opening Width	Opening Height	ZONE	GLASS TYPE	QTY
CW-01-F-OP-W	1000	1150	C	GL01AC	05

CURTAINWALL SCHEDULE					
ITEM REF#	LEVEL	ELEVATION	ZONE	GLASS TYPE	QTY
C-FR-CW-01E	1st To 8th	Front	C	As Shown	01

KEYPLAN: NORTH:

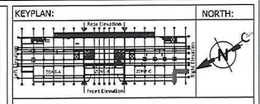

GENERAL NOTES:

1. DO NOT SCALE THE DRAWINGS, USE FIGURED DIMENSIONS ONLY.
2. ALL DIMENSIONS ARE IN MILLIMETERS AND ALL LEVELS ARE IN METERS UNLESS OTHERWISE NOTED.
3. ALL DIMENSIONS SHALL BE VERIFIED ON SITE BEFORE PROCEEDING WITH THE WORK.

GL01A — 30mm thk Vision Glass Panel-As Approved
8mm thk Sunguard SN 40T Tempered Glass
16mm AIR Space With U Insert
6mm Clear Tempered

GL01B — 30mm thk Spandrel Glass Panel-As Approved
8mm thk Sunguard SN 40T Tempered Glass
16mm AIR Space With U Insert
6mm thk Clear Tempered With Ceramic Back Painted RAL 7004 Grey (100%)

GL03(CU) — Laminated Curve Glass-As Per Approval
6mm thk Guardian Light Blue 52+Annealed Glass
1.52mm thk PVB
6mm thk Clear Annealed Glass

GL01A(CU) — Curve Glass-As Per Approval
8mm thk SunGuard® SN 40 T Fully Tempered
16mm Air Space With 'U' Insert
6mm thk Clear Glass Fully Tempered

Finish: JOTUN SDF As Per Approval

MTS SUBMITAL REFERENCES:

Document Ref.	DESCRIPTION
SFH-ALU-MAT-ARC-GEN-001-R00	MTS FOR 4-SIDED STRL GLAZED CURTAIN WALL
SFH-ALU-MAT-ARC-GEN-002-R00	MTS FOR GLAZING
SFH-ALU-STRL-ARC-GEN-001	STRL CALCULATION FOR DOUBLE HEIGHT WITH GLC
SFH-ALU-STRL-ARC-GEN-003	STRL CALCULATION FOR FRONTALEFT ELEVATION

SUBMITTAL REVISIONS:

NO.	DATE	BY	DESCRIPTION
01	13-06-2023	AJM	SUBMITTAL FOR APPROVAL
01	07-06-2023	AJM	SUBMITTAL FOR APPROVAL
00	28-03-2023	AJM	SUBMITTAL FOR APPROVAL

CONSULTANT APPROVAL

APPROVAL STATUS

A	B	C	D
APPROVED	APPROVED AS NOTED	AMEND AND RESUBMIT	DISAPPROVED

ENGINEER	NAME	SIGNATURE
ARCHITECT & PROJECT COORDINATOR		
STRUCTURE		
ELECTRICAL		
MECHANICAL		
SURVEYOR		
PROJECT MANAGER		

OWNER

EXECUTIVE MANAGER	ENG/ Amr Gomaa
PROJECT MANAGER	ENG/ Ahmad Bayouni
PROJECT DIRECTOR	ENG/ Osama Mutawea

PROJECT NAME: مستشفى الدكتور سليمان الفقية
مبنى وقف الاستاذ عبد الباري الشاوي

CLIENT: شركة الطور للخدمات الطبية — فقيه Takeh Care

DESIGNER: الدار الدولية للهندسة DAR ENGINEERING
Olaya Street 7552, 13326 Riyadh, Saudi Arabia
CR: 1010 DAR DESIGN
LICENSE: 2014 A A
SAUDI - UNION - PORTUGAL

CONSULTANT: مكتب عبد الرزاق حكيم للاستشارات الهندسية
ABDULRAZAK HAKEEM CONSULTING ENGINEERS
AL HEZAM ROAD, MADINAH K.S.A
TEL. 048486448
P.O. BOX. 20237 FAX. 048486449
Email:hakeemarch@hotmail.com

MAIN CONTRACTOR: شركة الخريجي للتجارة والمقاولات — Elkhereiji Commerce & Contracting Co. — ELKHEREIJI

SUB CONTRACTOR: شركة مصنع قطعة الألومنيوم الخشبي المحدودة — ALUMINUM WOODPIECE FACTORY CO. LTD.
Riyadh - Al Sahab - Exit 19
Kingdom of Saudi Arabia
Mob: +966 567 223 335
Mob: +966 564 884 095

PROJECT COORDINATOR	ENG/ Hamdi Ahmed
CONSTRUCTION MANAGER	ENG/ Waleed Gamal
PROJECT MANAGER	ENG/ Harry Al Seyagh

DRAWING TYPE: SHOP DRAWING

DRAWING TITLE: **Partial Plan,Elevation and Section CW01-F and CW01-E**

DRAWING NO: SFHM-EK-280-SUP-SD-AL103-**2015**

DRAWING BY:	AJM	SUBMITTAL NO:	SFHM-EK-SUP-AL103		
CHEKED BY:	HM				
VERIFIED BY:	M. SH	SCALE: AS.SH	SIZE: A1	DATE: 10-06-2023	REVISION NO: 01
APPROVED BY:	Eng. Hosny I				

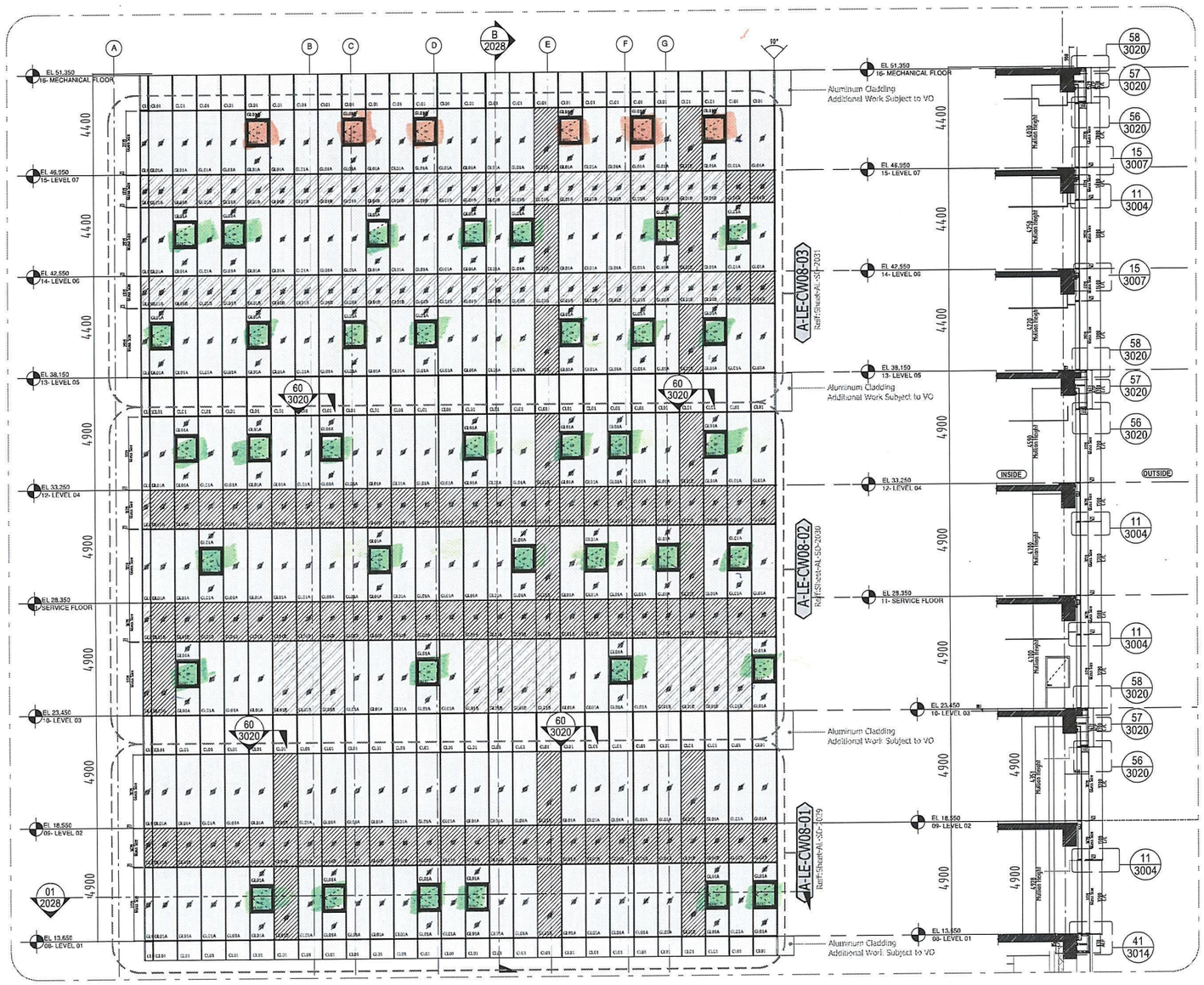

A 2028 | **Partial Elevation Without GRC Panel**
Scale: 1:100

B 2028 | **Partial Section**
Scale: 1:100

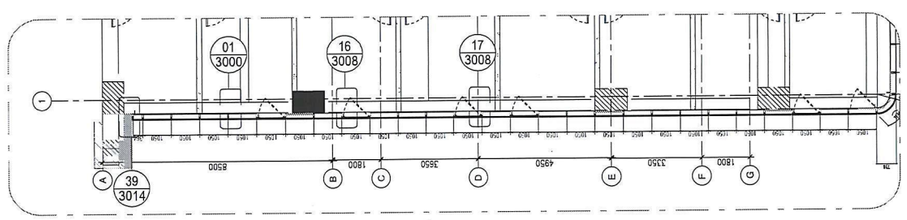

01 2028 | **Partial Plan At LVL-01**
Scale: 1:100

CURTAINWALL SCHEDULE					
ITEM REF #	LEVEL	ELEVATION	ZONE	GLASS TYPE	QTY
A-LE-CW-08	1st To 8th	Left	A	As Shown	01

WINDOW SCHEDULE(ALUPCO 56W HINGED WINDOW)					
ITEM REF #	Opening Width	Opening Height	ZONE	GLASS TYPE	QTY
CW-08-OP-W	1000	1150	A	GL01C	43

W01-1 — 37
W01-2 — 6

35/35

KEYPLAN:

NORTH:

GENERAL NOTES:

1. DO NOT SCALE THE DRAWINGS, USE FIGURED DIMENSIONS ONLY.
2. ALL DIMENSIONS ARE IN MILLIMETERS AND ALL LEVELS ARE IN METERS UNLESS OTHERWISE NOTED.
3. ALL DIMENSIONS SHALL BE VERIFIED ON SITE BEFORE PROCEEDING WITH THE WORK.

GL01A: 30mm thk Vision Glass Panel-As Approved; 8mm thk Sunguard SN 40T Tempered Glass; 16mm AIR Space With U Insert; 6mm Clear Tempered

GL01B: 30mm thk Spandrel Glass Panel-As Approved; 8mm thk Sunguard SN 40T Tempered Glass; 16mm AIR Space With U Insert; 6mm thk Clear Tempered With Ceramic Back Painted RAL 7004 Grey (100%)

CL01: Aluminum Cladding(As Approved) ALCOBOND FR Class(A2-s1-d0) Pure White ALC 016

Finish: RAL-SDF-7046 With 50% Gloss (As Approved)

Anchors: As Per Strc.Calculation Approval

Fastners: As Per Strc.Calculation Approval

REFERENCES:

Document Ref.	DESCRIPTION

SUBMITTAL REVISIONS:

NO.	DATE	BY	DESCRIPTION
01	13-06-2023	AJM	SUBMITTAL FOR APPROVAL
00	13-06-2023	AJM	SUBMITTAL FOR APPROVAL

CONSULTANT APPROVAL

APPROVAL STATUS

A	B	C	D
APPROVED	APPROVED AS NOTED	AMEND AND RESUBMIT	DISAPPROVED

ENGINEER	NAME	SIGNATURE
ARCHITECT & PROJECT COORDINATOR		
STRUCTURE		
ELECTRICAL		
MECHANICAL		
SURVEYOR		
PROJECT MANAGER		

OWNER

EXECUTIVE MANAGER	ENG/ Amr Gomaa
PROJECT MANAGER	ENG/ Ahmad Bayouni
PROJECT DIRECTOR	ENG/ Osama Mutawea

PROJECT NAME: مستشفى الدكتور سليمان الفقية
مبنى وقف الاستاذ عبد الباري الشاوي

CLIENT: شركة الطور للخدمات الطبية — فقيه healthcare

DESIGNER: الدار الهندسية للهندسة — DAR ENGINEERING
Olaya Street 7552, 13326 Riyadh, Saudi Arabia
PAC-DC
P.O.BOX 204 A A
14494-271 LISBON - PORTUGAL

CONSULTANT: ABDULRAZAK HAKEEM — مكتب عبد الرزاق حكيم للاستشارات الهندسية
CONSULTING ENGINEERS
AL HEZAM ROAD, MADINAH K.S.A
TEL: 04948649
P.O. BOX. 20237 FAX: 04948649
Email:hakeemarch@hotmail.com

MAIN CONTRACTOR: الخريجي للتجارة والمقاولات — ELKHEREIJI
Elkhereiji Commerce & Contracting Co.
mail@elkhereiji.com www.elkhereiji.com
P.O.Box 11138, Jeddah 21460, Kingdom of Saudi Arabia

SUB CONTRACTOR: شركة مصنع أنظمة الألومنيوم الخشبي المحدودة
ALUMINUM CONSTRUCTION SYSTEMS FACTORY CO. LTD.
Riyadh - Al Rabik - East Ring
Kingdom of Saudi Arabia
Mob.: +966 567 212 235
Mob.: +966 564 884 095

PROJECT COORDINATOR	ENG/ Hamdi Ahmed
CONSTRUCTION MANAGER	ENG/ Waleed Gamal
PROJECT MANAGER	ENG/ Hany Al Sayegh

DRAWING TYPE: SHOP DRAWING

DRAWING TITLE:
Partial Plan,Elevation and Section
CW08-MASTER ELEVATION

DRAWING NO: SFHM-EK-280-SUP-SD-AL105-**2028**

DRAWING BY:	AJM	SUBMITTAL NO:			
CHEKED BY:	HM	SFHM-EK-SUP-AL102			
VERIFIED BY:	M. SH	SCALE: AS.SH	SIZE: A1	DATE: 13-06-23	REVISION NO: 01
APPROVED BY:	Eng. Hosny I				