ALUSYSTEMS
Aluminum Construction Systems Factory Co.

ACL-COVER PAGE

TECHNICAL DEPARTMENT
QR 7.3.0.8 Rev A 2019

PROJECT NAME : KAP5 SITES 12, 69 & 157

PROJECT CODE : 10225

ITEM REF. No. : CW09 & CW08

QUANTITY OF UNITS : 2

SYSTEM-ALUCAP

Complete	Partial	Additional	Sample
X	YES	X	X

Aluminum Color:	RALL-7022
SITE 120 TUMP-MAIN & PRAYER BUILDING	

ACL No : 26

E.M. Name. : W.H.

DATE : 07.08.2023

CC: Prod / QC / Eng'g / Proj.

REV. 00

Total No. of Sheets : 00

SN.	MATERIAL	SYSTEM	CODE	DESCRIPTION	QTY	AREA	Use Bar Length	Remarks
1	ALUMINUM	ALUCAP	CW09	CONVENTIONAL CURTAIN WALL	1	156.8		AS PER DRAWING
2	ALUMINUM	ALUCAP	CW08	CONVENTIONAL CURTAIN WALL	1	29.8		AS PER DRAWING
				TOTAL :	2	186.6		

NOTES :

REFERENCE :	MTO-10225-15	GCL # 22	SCL# 07	
Prepared By :	Checked By:	Checked By :	Approved By :	Received By :
Eng.Walid Hassan		Eng. Osama Abu Halima	Engr. Ahmed Hilal	Eng. Hamed
Project Engineer.		Technical Manager	Technical Manager	Operation Manager

ALUSYSTEMS
CONTROLLED COPY
DATE: 8/Aug/23
SIGN:

ACL-ALUMINUM CUTTING LIST

	PROJECT NAME: KAP5 SITES 12, 69 & 157								ACL No : 26
	PROJECT CODE : **10225**								
	ITEM REF. No. : CW09 & CW08								
	QUANTITY OF UNITS: 02	Width	Height						
	SYSTEM-ALUCAP	W	H						
	Sizes as per site verification								
	Actual frame sizes					Aluminum Color:	RALL-7022		
						SITE 120 TUMP-MAIN & PRAYER BUILDING			
Aluminum Profiles.		CONVENTIONAL CURTAIN WALL							
SN.	Alum. Profile/ Desc	Code/Die	Dimension (mm)	Qty.	Cut Angle	Ref W/H	Use Bar Lenth	Remarks	
01	FULL MULLION (195mm) M1	2730	5594	2	90-90	H	6000	(Ref to attached DWG.)	
02	FULL MULLION (195mm) M2	2730	5594	21	90-90	H	6000		
03	FULL MULLION (195mm) M3	2730	5594	1	90-90	H	6000		
04	FULL MULLION (195mm) M4	2730	1417	4	90-90	H	6000		
05	FULL MULLION (195mm) M5	2730	5594	1	90-90	H	6000		
06	FULL MULLION (195mm) M6	2730	5594	2	90-90	H	6000		
07	FULLTRANSOM (192mm) T1	2633	1022.4	4	90-90	W	6000	SEE ATTACHED DRAWING	
08	FULLTRANSOM (192mm) T1A	2633	1022.4	1	90-90	W	6000	SEE ATTACHED DRAWING (W/ NOTCHING)	
09	FULLTRANSOM (192mm) T2	2633	1172.4	84	90-90	W	6000	SEE ATTACHED DRAWING	
10	FULLTRANSOM (192mm) T2A	2633	1172.4	21	90-90	W	6000	SEE ATTACHED DRAWING (W/ NOTCHING)	
11	FULLTRANSOM (192mm) T3	2633	1186.4	5	90-90	W	6000	SEE ATTACHED DRAWING	
12	FULLTRANSOM (192mm) T3A	2633	1186.4	5	90-90	W	6000	SEE ATTACHED DRAWING (W/ NOTCHING)	
13	FULLTRANSOM (192mm) T4	2633	1022.4	4	90-90	W	6000	SEE ATTACHED DRAWING	
14	FULLTRANSOM (192mm) T4A	2633	1022.4	1	90-90	W	6000	SEE ATTACHED DRAWING (W/ NOTCHING)	
15	FULLTRANSOM (192mm) T5	2633	1022.4	4	90-90	W	6000	SEE ATTACHED DRAWING	
16	FULLTRANSOM (192mm) T5A	2633	1022.4	1	90-90	W	6000	SEE ATTACHED DRAWING (W/ NOTCHING)	
17	PRESSURE PLATE	32374	5594	27	90-90	H	6000	M.F	
18	PRESSURE PLATE	32374	1417	4	90-90	H	6000	M.F	
19	PRESSURE PLATE T1	32374	995	5	90-90	W	6000	M.F	
20	PRESSURE PLATE T2	32374	1145	105	90-90	W	6000	M.F	
21	PRESSURE PLATE T3	32374	1159	10	90-90	W	6000	M.F	
22	PRESSURE PLATE T4	32374	995	5	90-90	W	6000	M.F	

23	PRESSURE PLATE T5	32374	995	5	90-90	W	**6000**	**M.F**
24	MULLION COVER CAP	32372	5594	27	90-90	H	**6000**	
25	MULLION COVER CAP	32372	1417	4	90-90	H	**6000**	
26	TRANSOM COVER CAP T1	32373	1000	5	90-90	W	**6000**	
27	TRANSOM COVER CAP T2	32373	1150	105	90-90	W	**6000**	
28	TRANSOM COVER CAP T3	32373	1164	10	90-90	W	**6000**	
29	TRANSOM COVER CAP T4	32373	1000	5	90-90	W	**6000**	
30	TRANSOM COVER CAP T5	32373	1000	5	90-90	W	**6000**	
31	NOSE ADAPTOR	35447	5594	27	90-90	H	**6000**	**M.F**
32	NOSE ADAPTOR	35447	1417	5	90-90	W	**6000**	**M.F**
33	NOSE ADAPTOR	35447	1022.4	5	90-90	W	**6000**	**M.F**
34	NOSE ADAPTOR	35447	1172.4	105	90-90	W	**6000**	**M.F**
35	NOSE ADAPTOR	35447	1186.4	5	90-90	W	**6000**	**M.F**
36	NOSE ADAPTOR	35447	1022.4	5	90-90	W	**6000**	**M.F**
37	NOSE ADAPTOR	35447	1022.4	5	90-90	W	**6000**	**M.F**
38	ADAPTOR M	35405	5594	6	90-90	H	**6000**	
39	ADAPTOR T	35405	1000	6	90-90	W	**6000**	
40	ADAPTOR T	35405	1150	24	90-90	W	**6000**	
41	ADAPTOR T	35405	1164	5	90-90	W	**6000**	
42	SHOE BRACKET (SB-01)	32877	172	30	90-90	W	**6000**	**M.F**
43	SHOE BRACKET (SB-02)	32877	172	10	90-90	W	**6000**	**M.F**
TOTAL CUTTED PCS.				**711**				

3/37

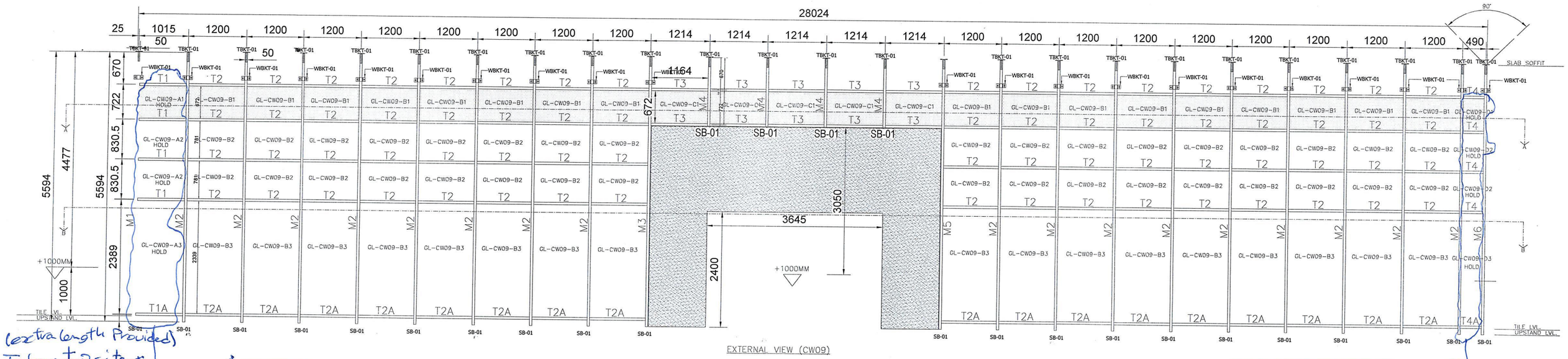

(extra length Provided)
To be cut @ site as per site conditions

EXTERNAL VIEW (CW09)

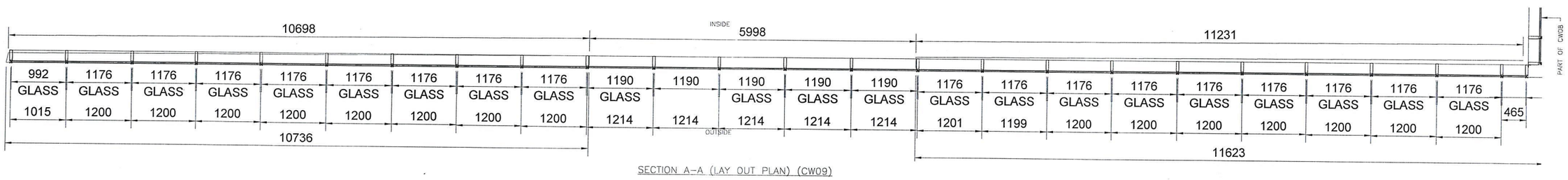

SECTION A–A (LAY OUT PLAN) (CW09)

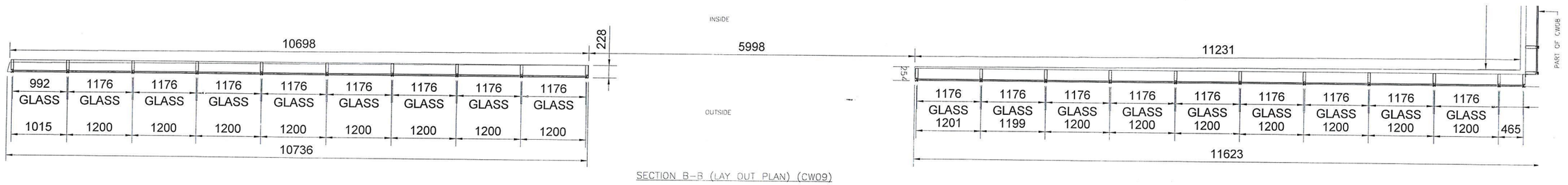

SECTION B–B (LAY OUT PLAN) (CW09)

4/37

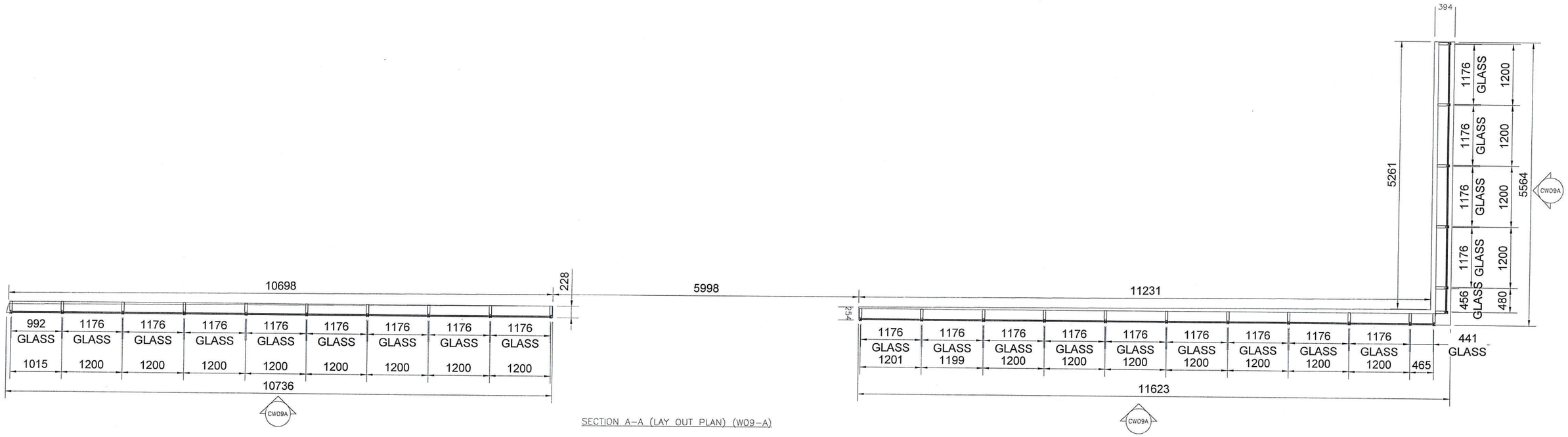

SECTION A–A (LAY OUT PLAN) (W09–A)

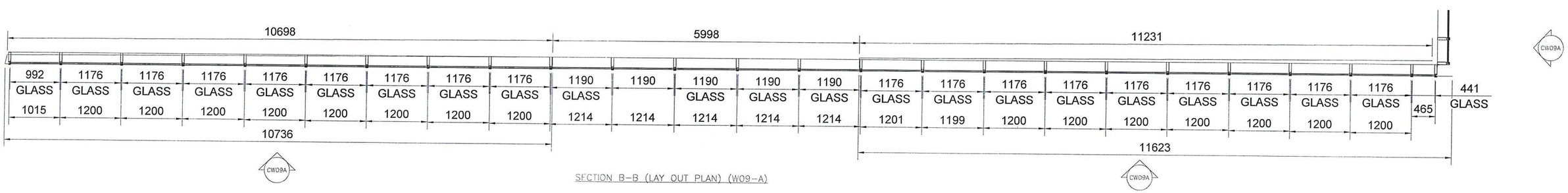

SECTION B–B (LAY OUT PLAN) (W09–A)

5/37

extra length Provided
To be cut @ site
as Per site conditions

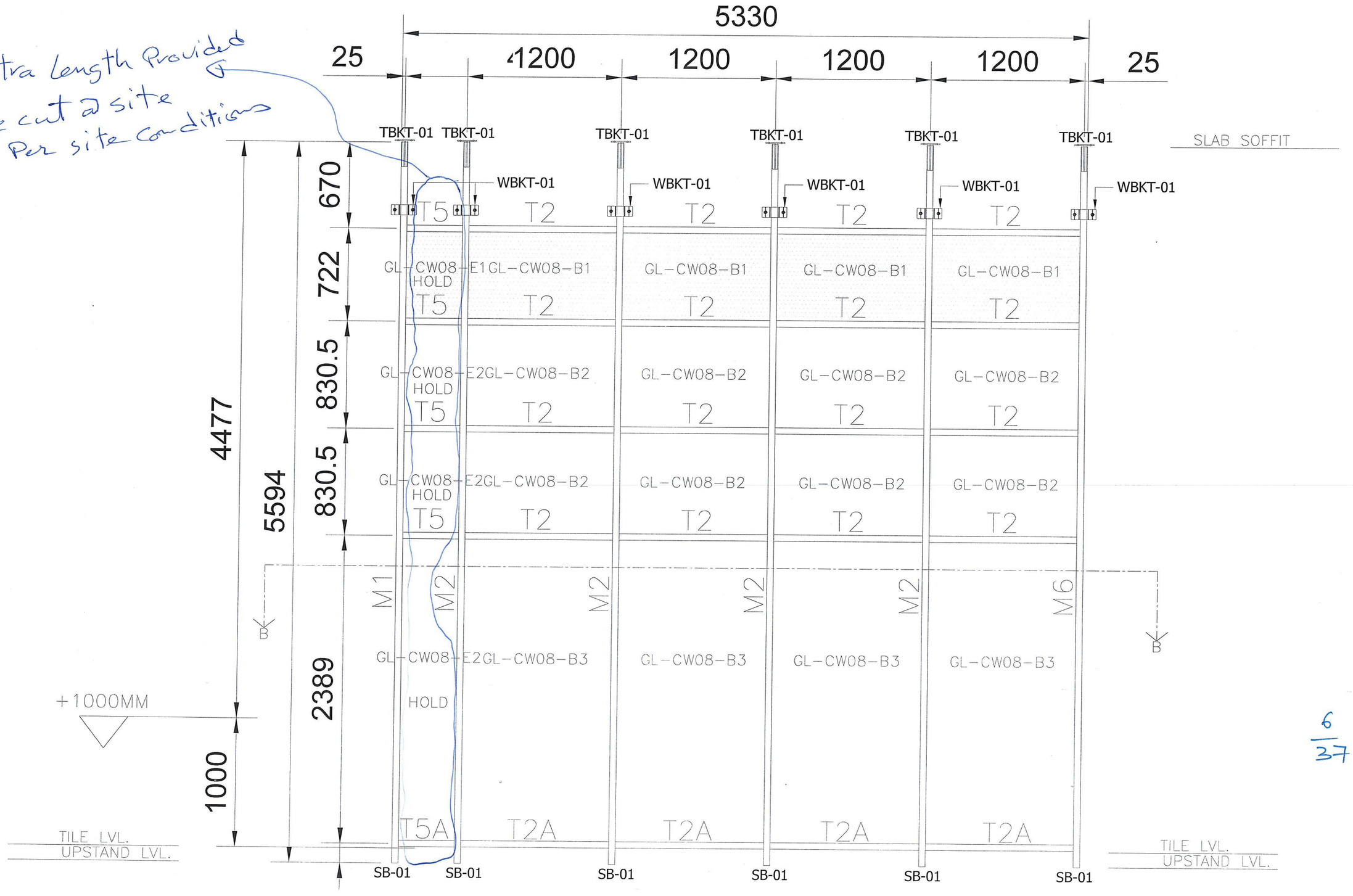

6/37

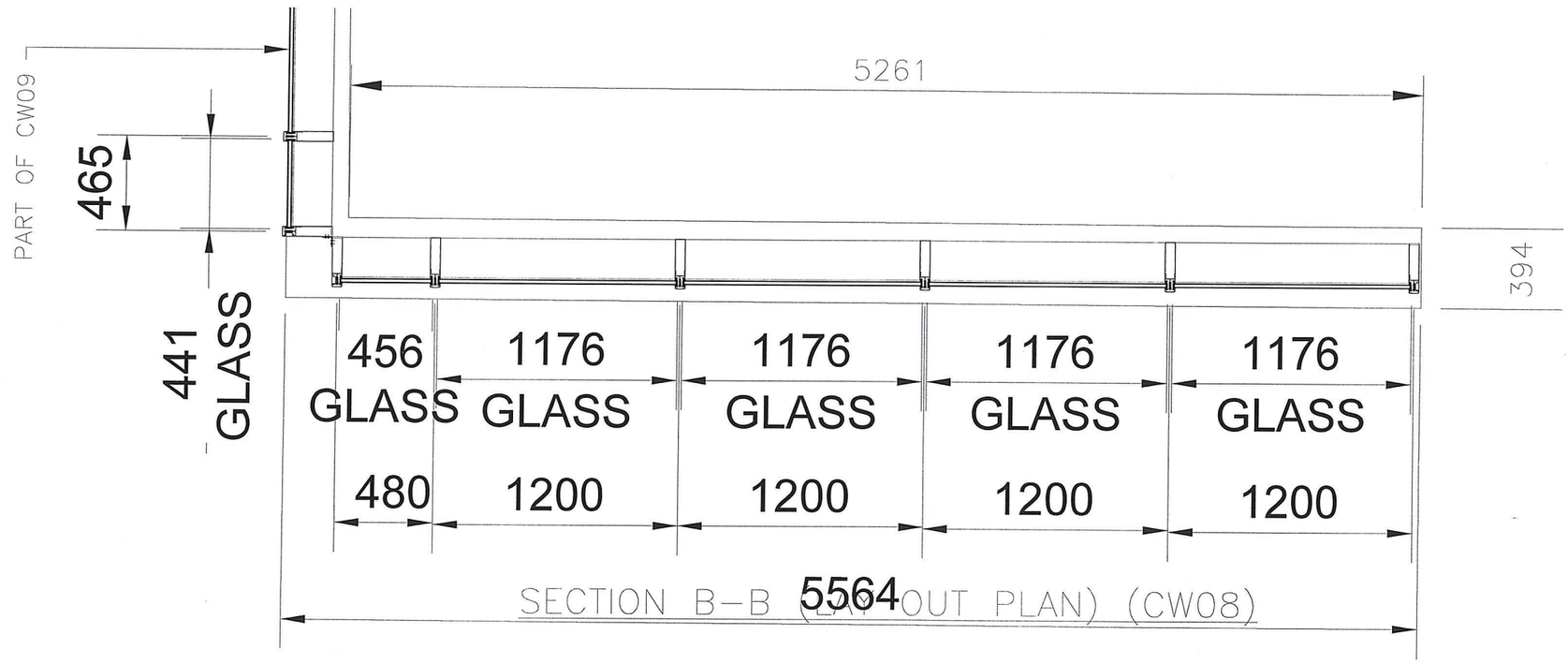
PART OF CW09
465
441
GLASS
5261
394
456
GLASS
1176
GLASS
1176
GLASS
1176
GLASS
1176
GLASS
480
1200
1200
1200
1200
5564
SECTION B-B (LAYOUT PLAN) (CW08)

7/37

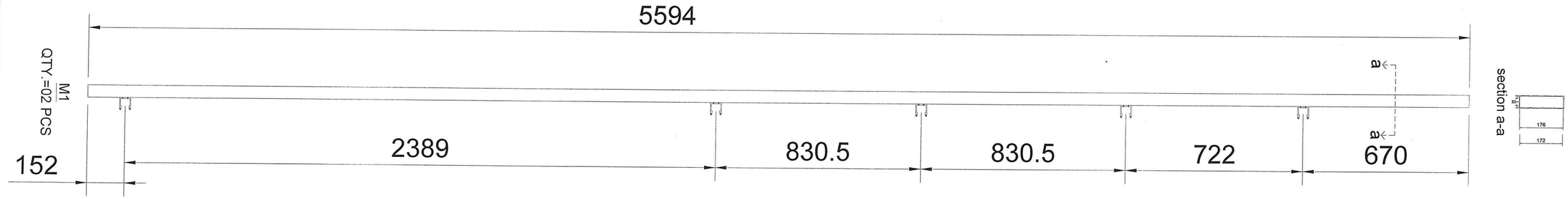
5594
M1
QTY.=02 PCS
152
2389
830.5
830.5
722
670
a
a
section a-a
176
172

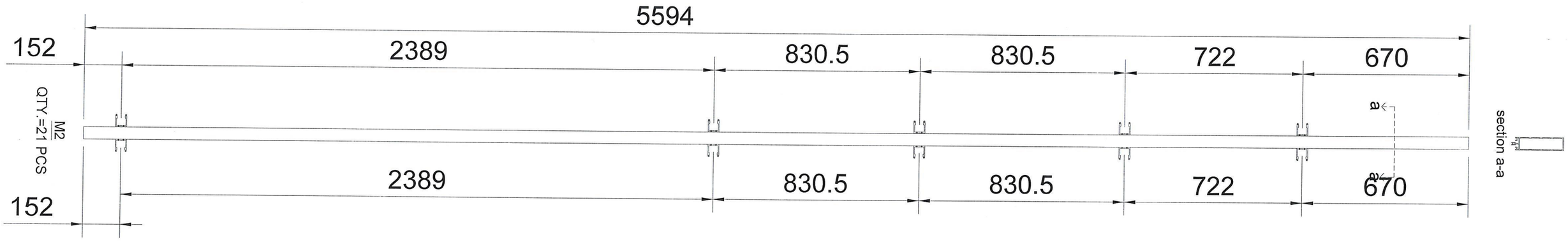
5594
152
2389
830.5
830.5
722
670
M2
QTY.=21 PCS
a
a
section a-a
2389
830.5
830.5
722
670
152

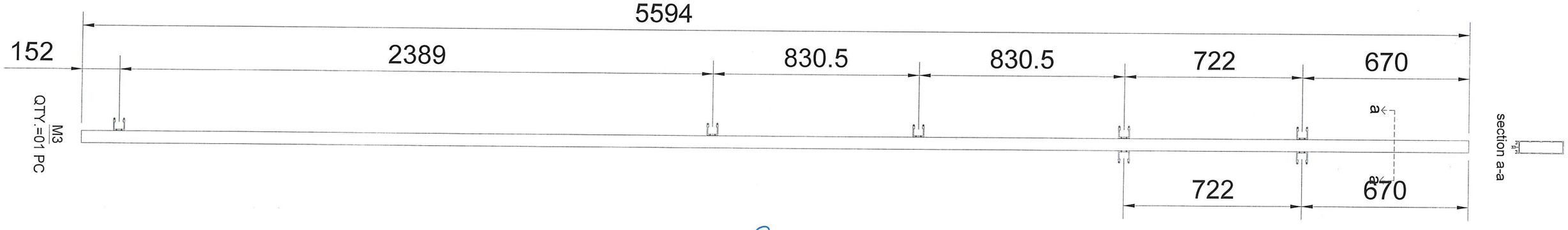
5594
152
2389
830.5
830.5
722
670
M3
QTY.=01 PC
a
a
section a-a
722
670

8/37

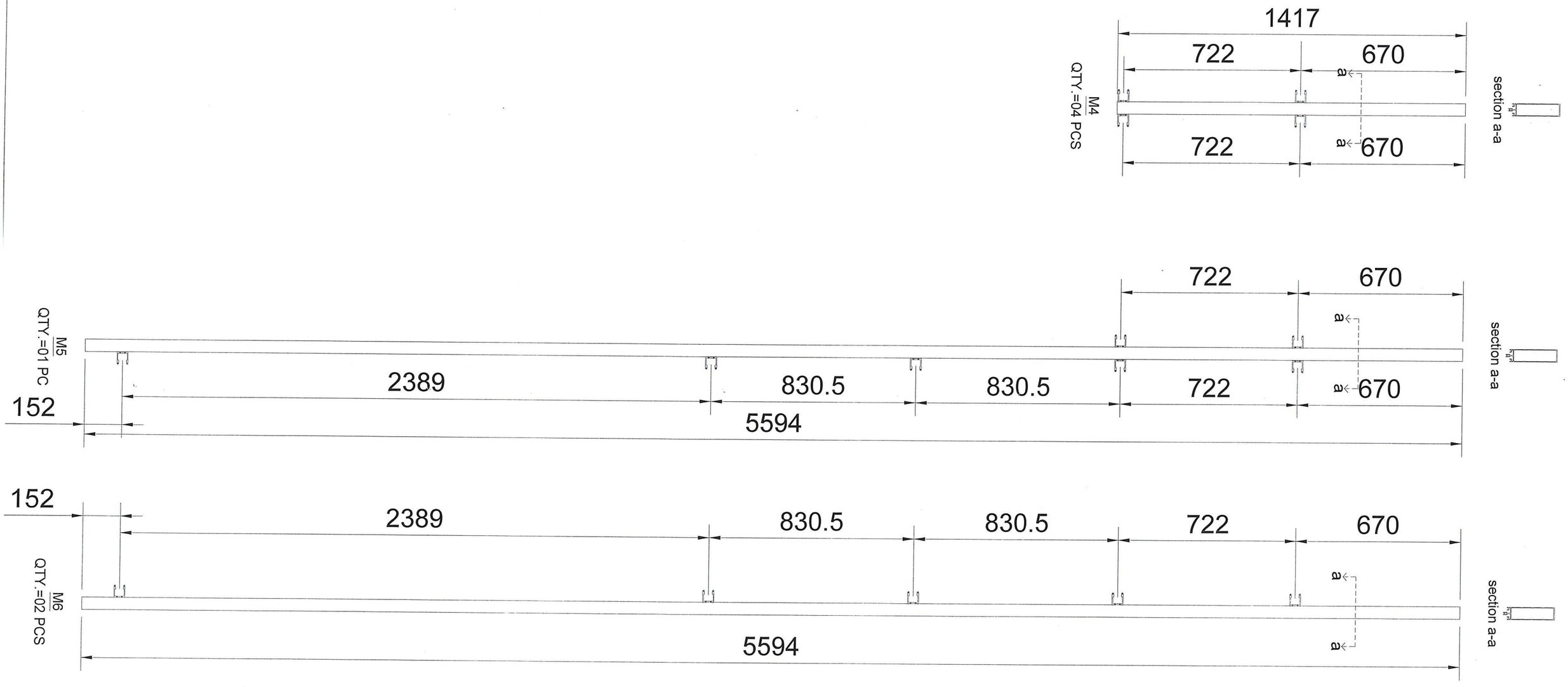
1417
722
670
a
a
722
670
M4
QTY.=04 PCS
section a-a
722
670
a
a
722
670
M5
QTY.=01 PC
section a-a
152
2389
830.5
830.5
722
670
5594
152
2389
830.5
830.5
722
670
a
a
M6
QTY.=02 PCS
section a-a
5594

9/37

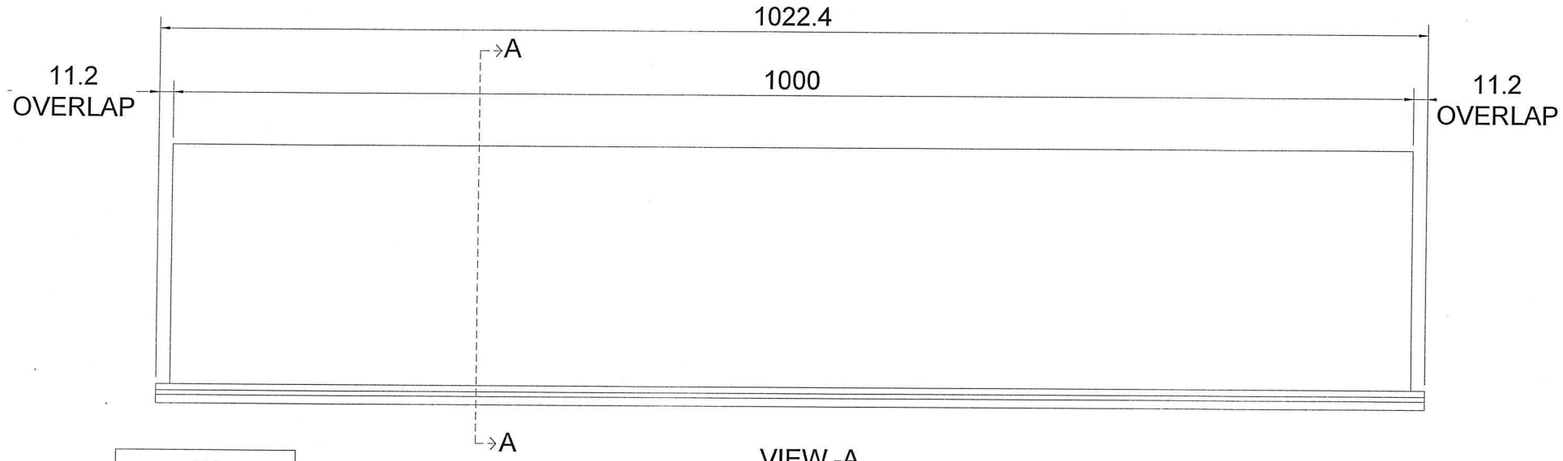

VIEW -A

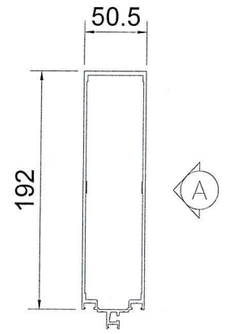

SECTION A-A

T1
QTY.=5 PCS

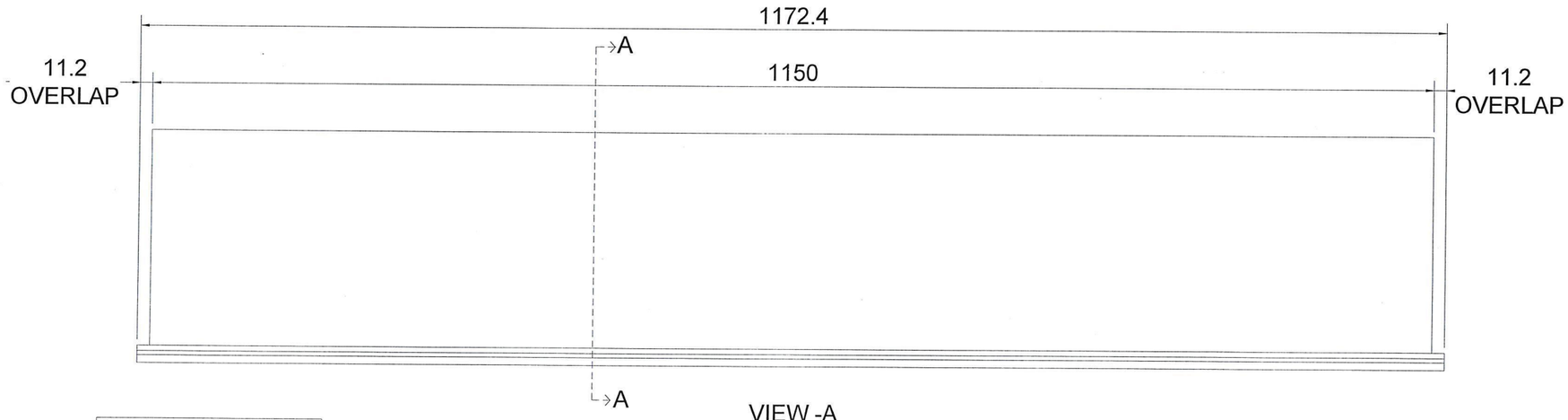

VIEW -A

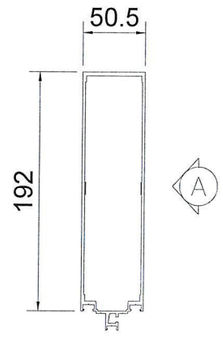

SECTION A-A

T2
QTY.=105 PCS

10/37

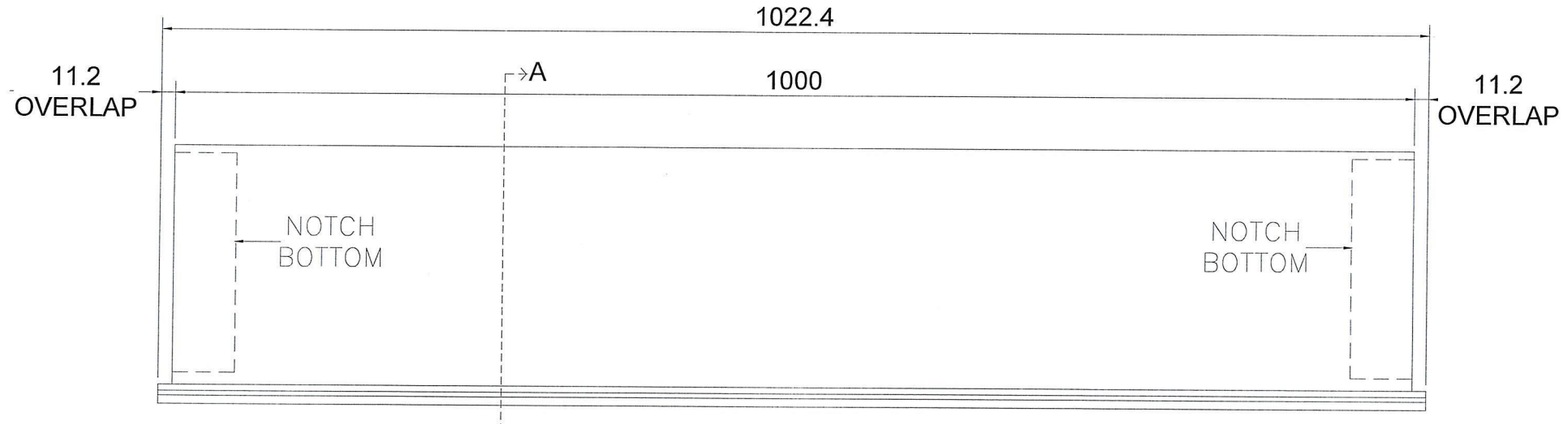

VIEW -A

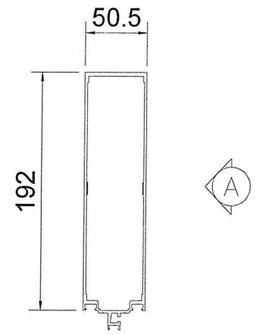

SECTION A-A

T1A
QTY.=1 PC

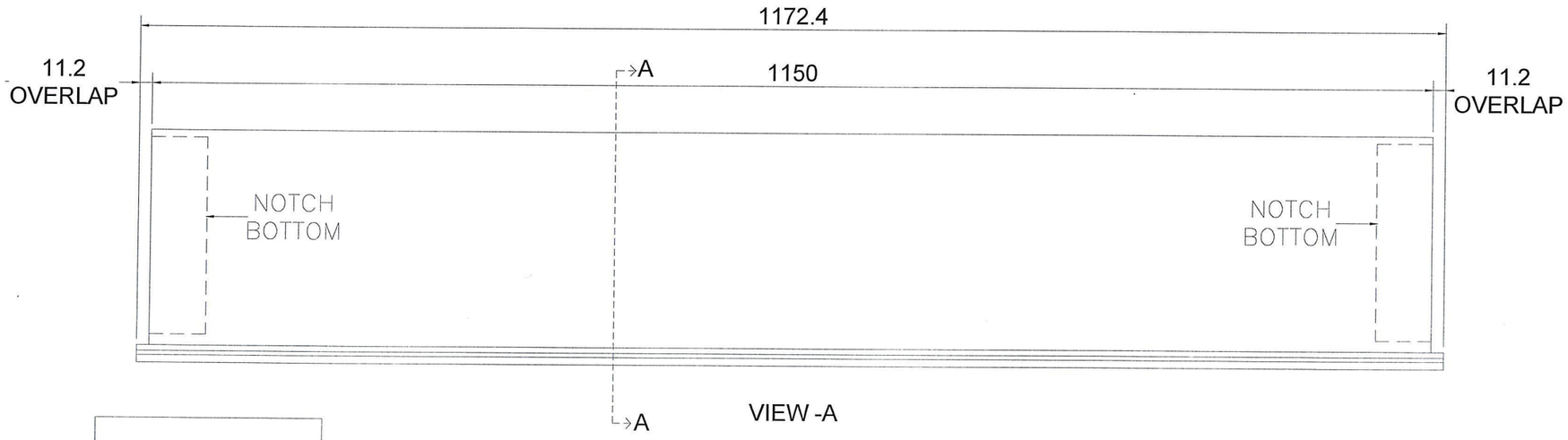

VIEW -A

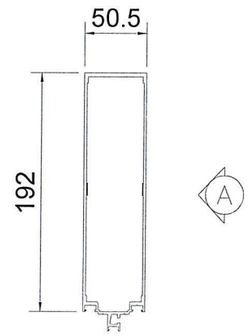

SECTION A-A

T2A
QTY.=21 PCS

11/37

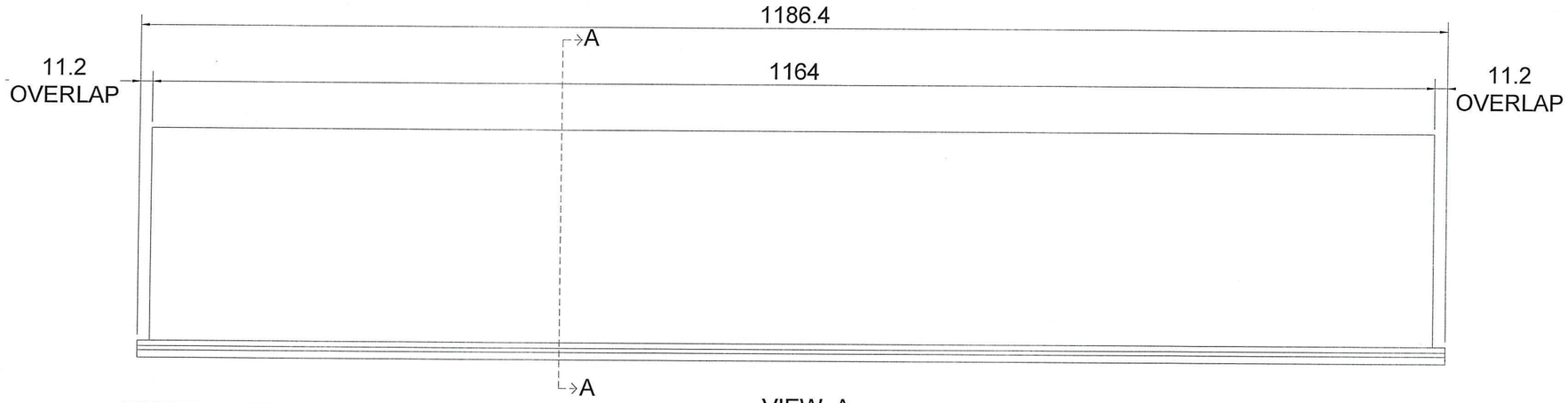

VIEW -A

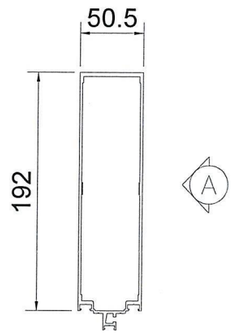

SECTION A-A

T3
QTY.=10 PCS

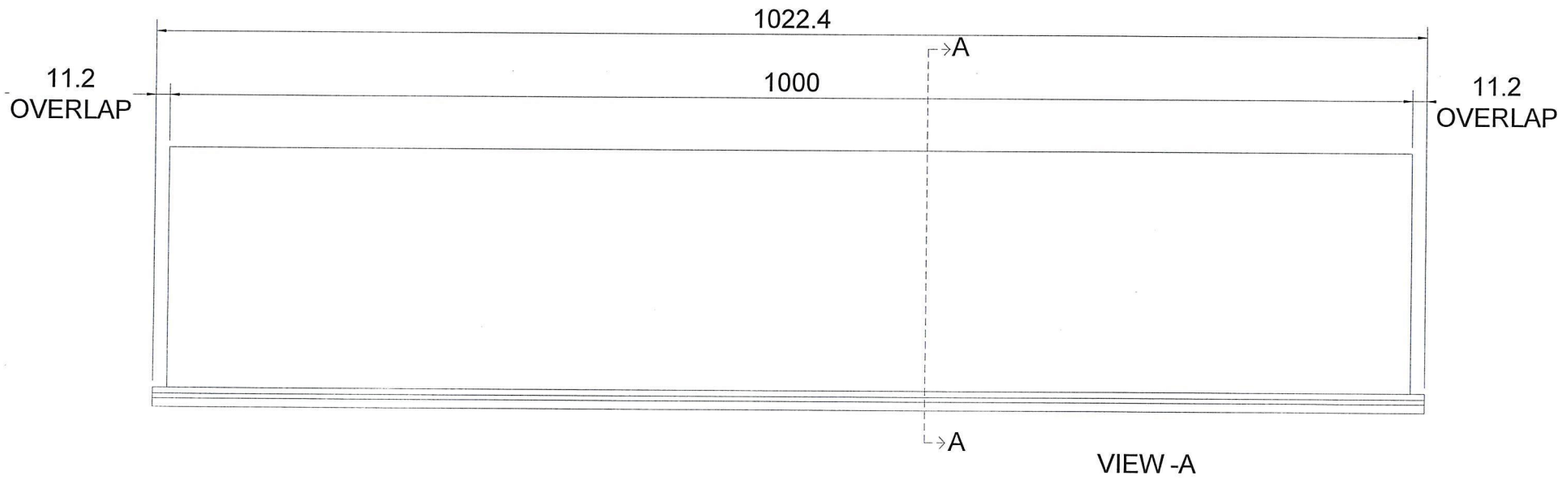

VIEW -A

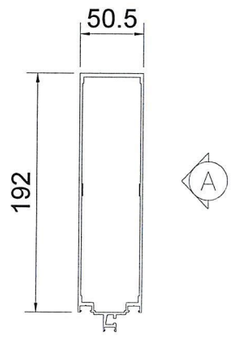

SECTION A-A

T4
QTY.= 5 PCS

12/37

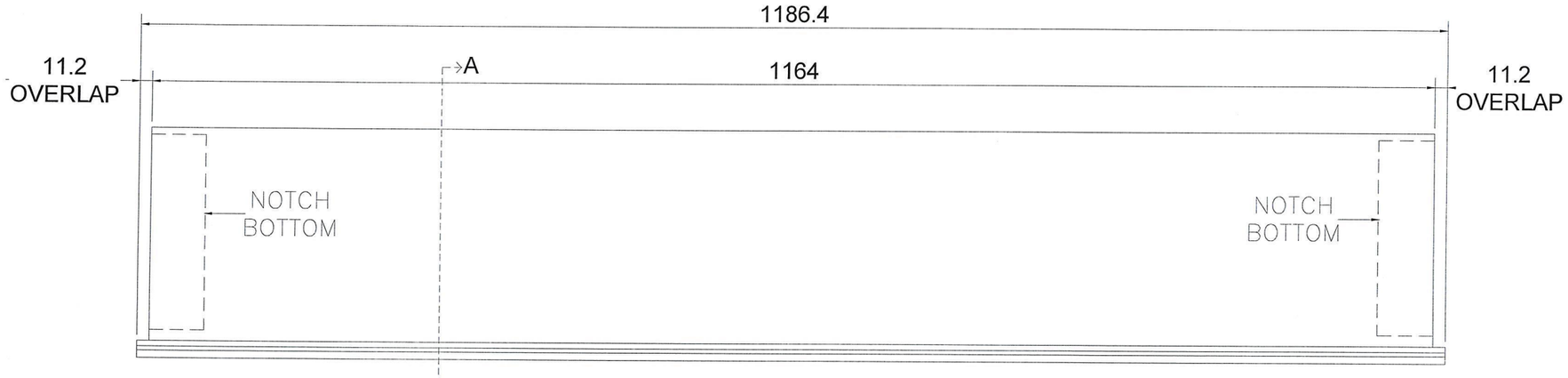

VIEW -A

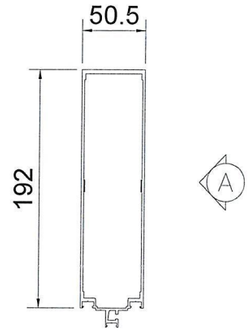

SECTION A-A

T3A
QTY.=1 PC

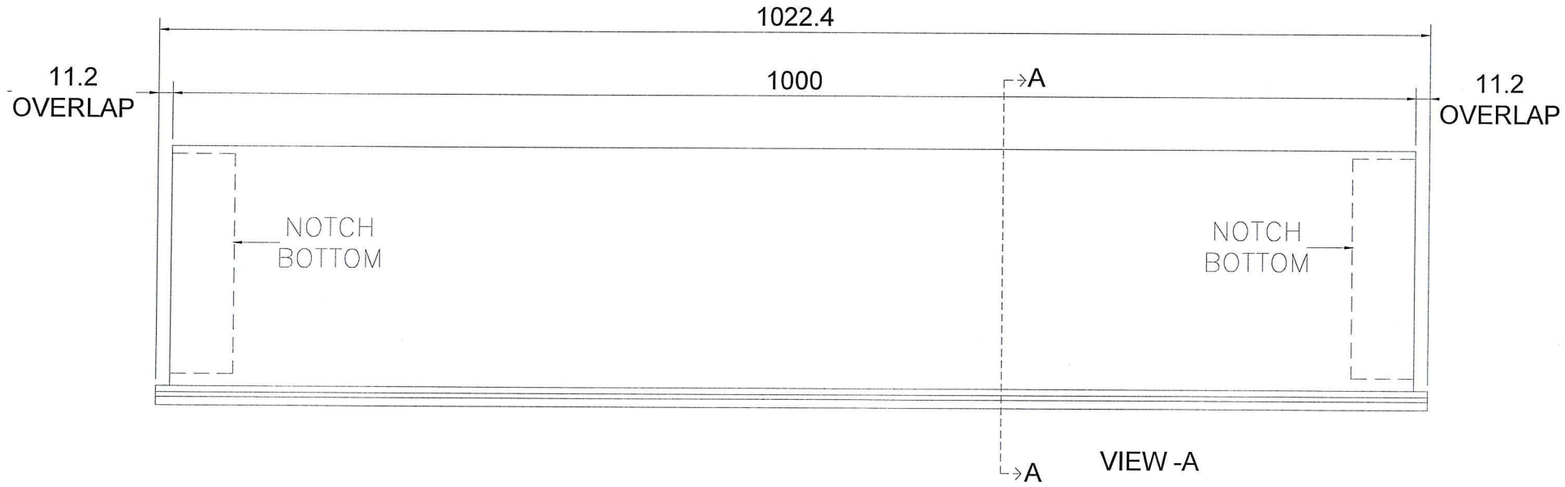

VIEW -A

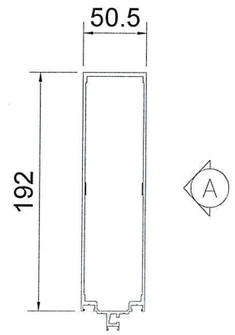

SECTION A-A

T4A
QTY.= 1 PC

13/37

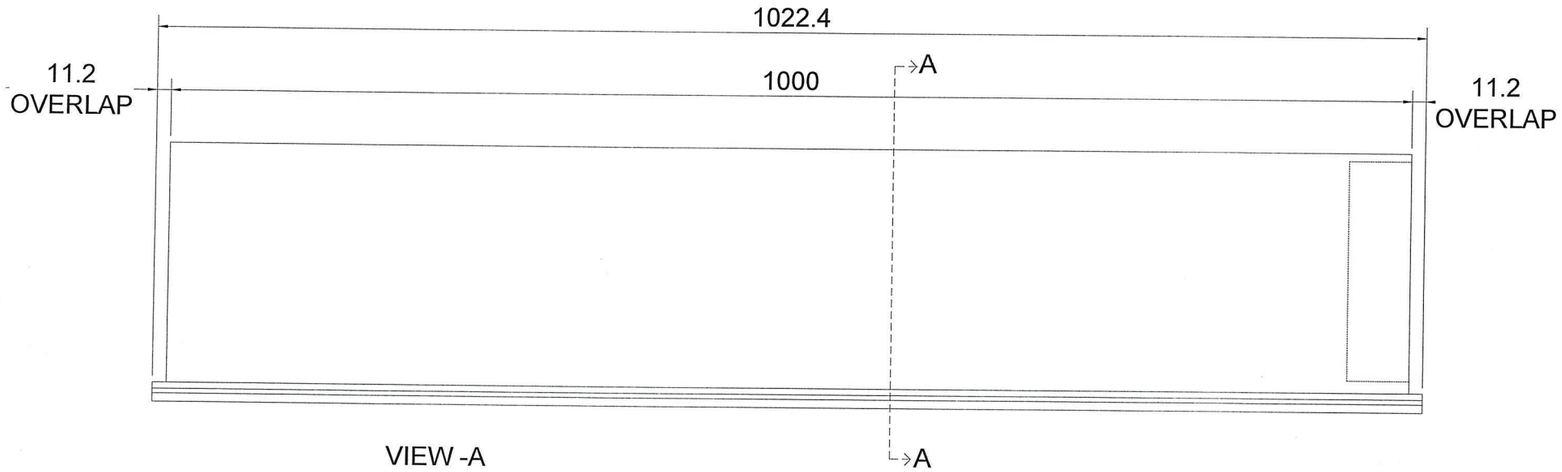

VIEW -A

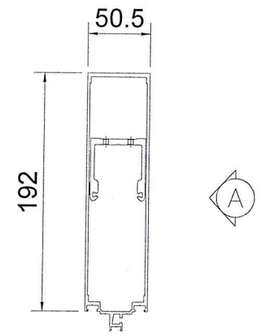

SECTION A-A

T5
QTY.= 5 PCS

14
37

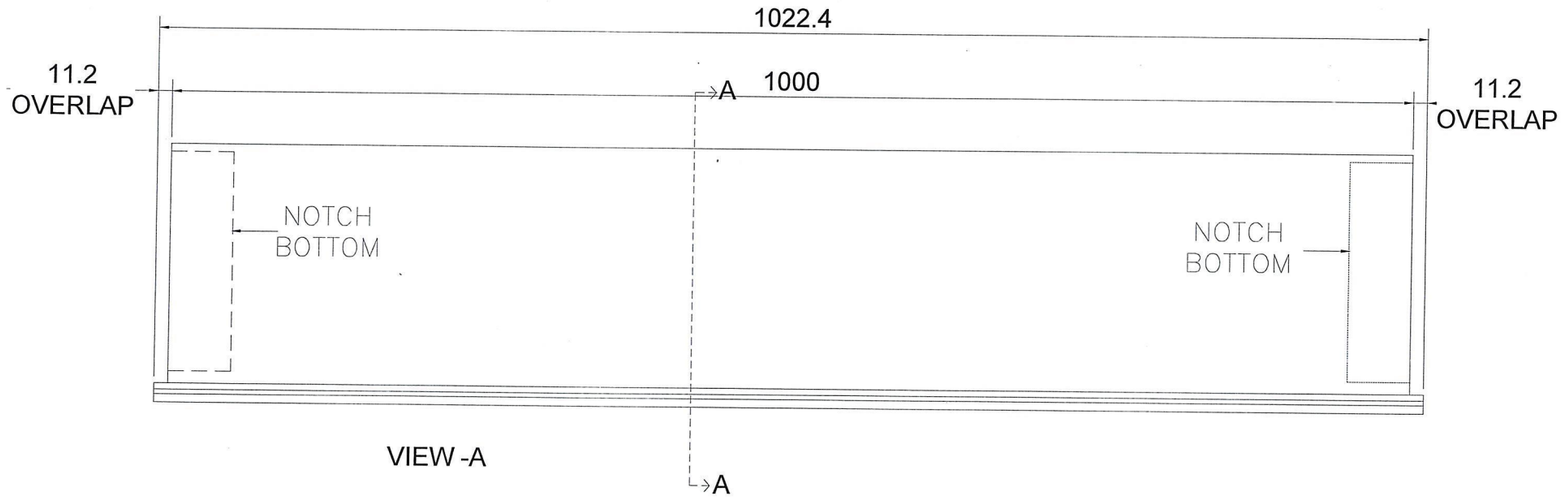

VIEW -A

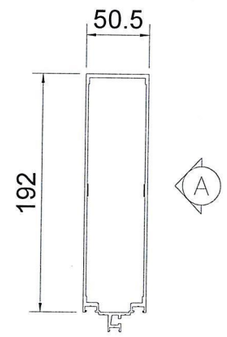

SECTION A-A

T5A
QTY.= 1 PC

15/37

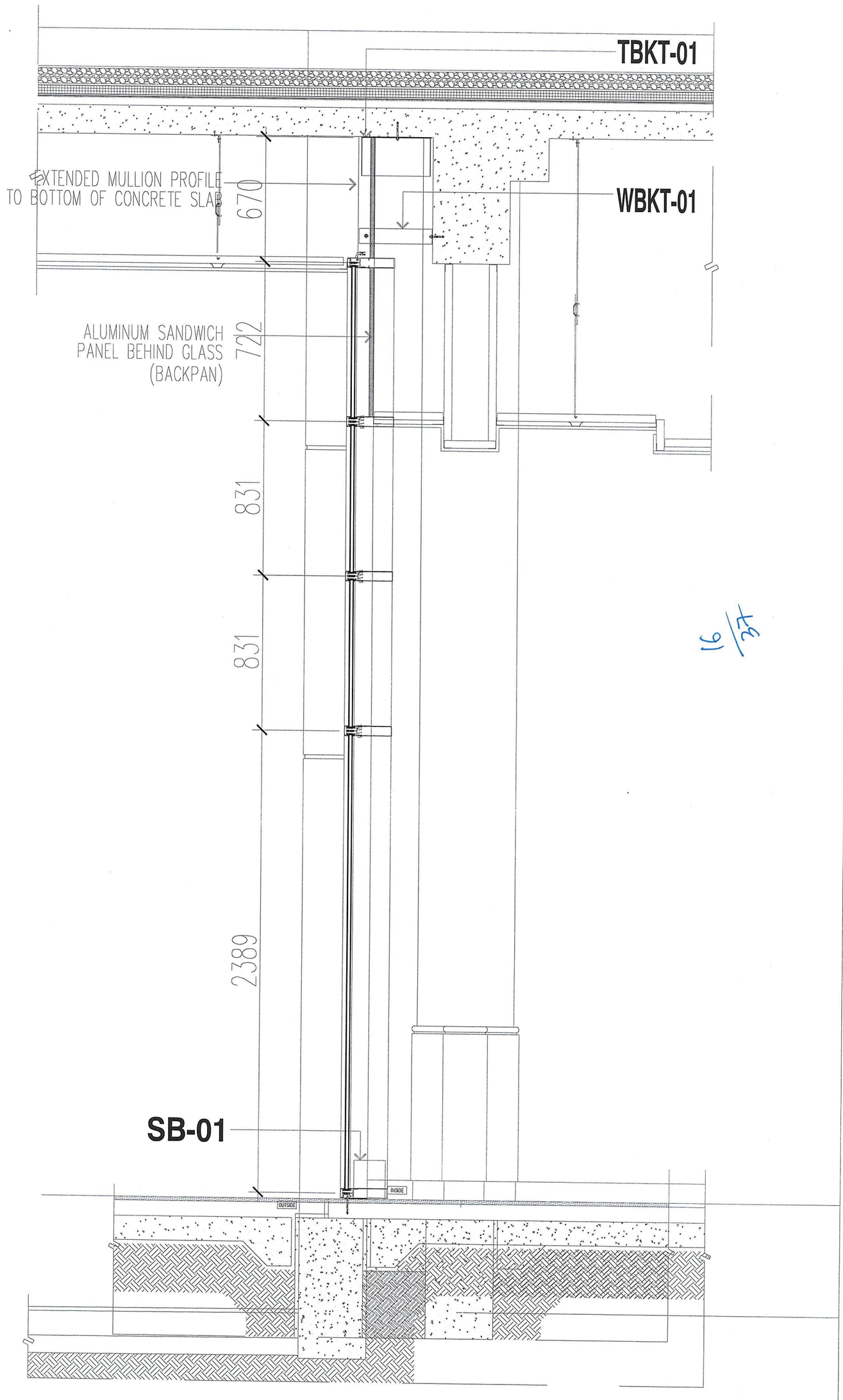

SECTION C-C

Rev.	CHECKED	PART NUMBER	DIM 'A'	DIM 'B'	DIM 'C'	DIM 'D'	DIM 'E'	DIM 'F'	DIM 'G'	Qty.
0	-		-	-	-	-	-	-	-	

ELEVATION

Ass. drawing
Part drawing

Drawn by: A.RANADA
Checked by:
Approved by:
Date Approved:
Project Name:
Title:
SECTION
Sheet #:
Date:

16/37

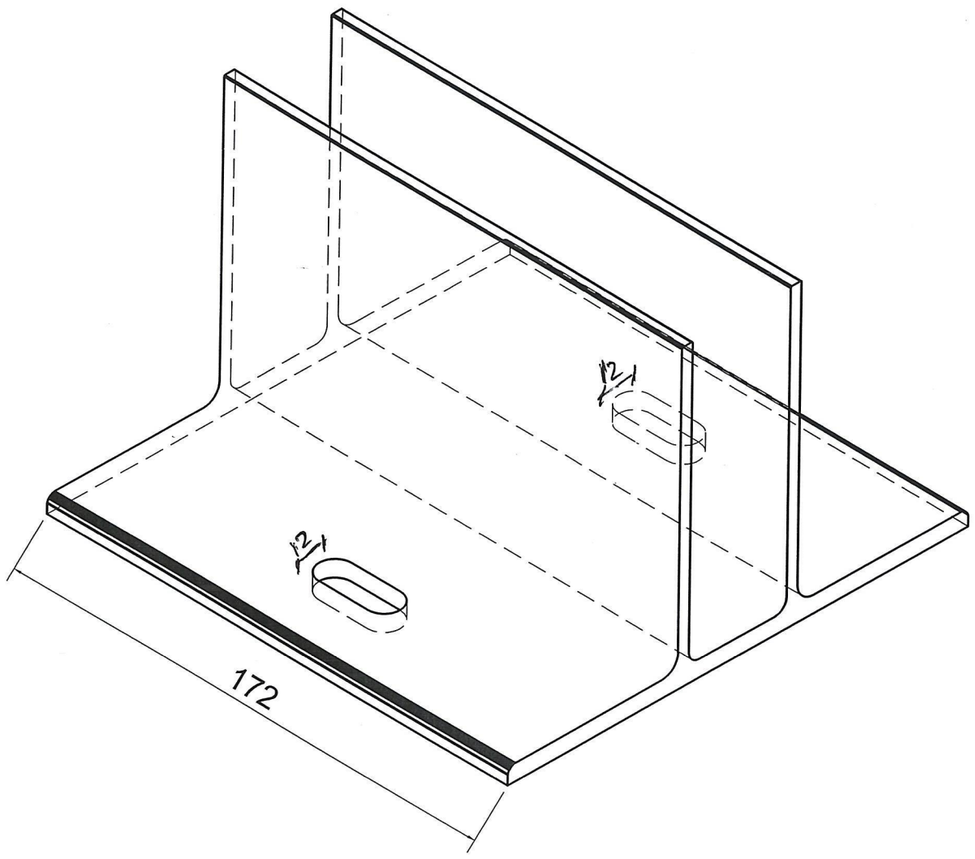

SB-01

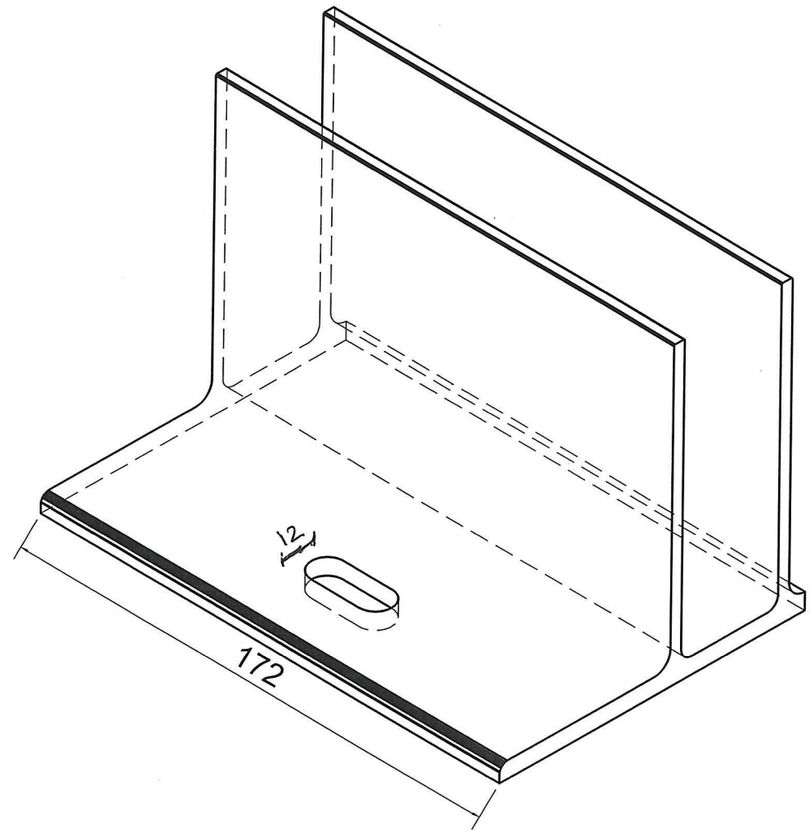

SB-02

Length	Material	Quantity	Label	Waste	Graphic: 1D
5960	2730	1	FULL MULLION (195mm)	272	1417 FULL MULLION (195mm); 1417 FULL MULLION (195mm); 1417 FULL MULLION (195mm); 1417 FULL MULLION (195mm)
5960	2730	27	FULL MULLION (195mm)	361	5594 FULL MULLION (195mm)
5960	2633	2	FULLTRANSOM (192mm)	3	1186.4 FULLTRANSOM (192mm); 1186.4 FULLTRANSOM (192mm); 1186.4 FULLTRANSOM (192mm); 1186.4 FULLTRANSOM (192mm); 1186.4 FULLTRANSOM (192mm)
5960	2633	21	FULLTRANSOM (192mm)	73	1172.4 FULLTRANSOM (192mm); 1172.4 FULLTRANSOM (192mm); 1172.4 FULLTRANSOM (192mm); 1172.4 FULLTRANSOM (192mm); 1172.4 FULLTRANSOM (192mm)
5960	2633	3	FULLTRANSOM (192mm)	823	1022.4 FULLTRANSOM (192mm); 1022.4 FULLTRANSOM (192mm); 1022.4 FULLTRANSOM (192mm); 1022.4 FULLTRANSOM (192mm); 1022.4 FULLTRANSOM (192mm)
5960	32374	3	PRESSURE PLATE	46	1417 PRESSURE PLATE; 1159 PRESSURE PLATE; 1159 PRESSURE PLATE; 1159 PRESSURE PLATE; 995 PRESSURE PLATE
5960	32374	1	PRESSURE PLATE	74	1417 PRESSURE PLATE; 1159 PRESSURE PLATE; 1145 PRESSURE PLATE; 1145 PRESSURE PLATE; 995 PRESSURE PLATE
5960	32374	20	PRESSURE PLATE	210	1145 PRESSURE PLATE; 1145 PRESSURE PLATE; 1145 PRESSURE PLATE; 1145 PRESSURE PLATE; 1145 PRESSURE PLATE
5960	32374	27	PRESSURE PLATE	361	5594 PRESSURE PLATE
5960	32374	1	PRESSURE PLATE	510	1145 PRESSURE PLATE; 1145 PRESSURE PLATE; 1145 PRESSURE PLATE; 995 PRESSURE PLATE; 995 PRESSURE PLATE
5960	32374	1	PRESSURE PLATE	960	995 PRESSURE PLATE; 995 PRESSURE PLATE; 995 PRESSURE PLATE; 995 PRESSURE PLATE; 995 PRESSURE PLATE
5960	32374	1	PRESSURE PLATE	1960	995 PRESSURE PLATE; 995 PRESSURE PLATE; 995 PRESSURE PLATE; 995 PRESSURE PLATE
5960	32372	1	MULLION COVER CAP	272	1417 MULLION COVER CAP; 1417 MULLION COVER CAP; 1417 MULLION COVER CAP; 1417 MULLION COVER CAP
5960	32372	27	MULLION COVER CAP	361	5594 MULLION COVER CAP
5960	32373	2	TRANSOM COVER CAP	115	1164 TRANSOM COVER CAP; 1164 TRANSOM COVER CAP; 1164 TRANSOM COVER CAP; 1164 TRANSOM COVER CAP; 1164 TRANSOM COVER CAP
5960	32373	21	TRANSOM COVER CAP	185	1150 TRANSOM COVER CAP; 1150 TRANSOM COVER CAP; 1150 TRANSOM COVER CAP; 1150 TRANSOM COVER CAP; 1150 TRANSOM COVER CAP
5960	32373	3	TRANSOM COVER CAP	935	1000 TRANSOM COVER CAP; 1000 TRANSOM COVER CAP; 1000 TRANSOM COVER CAP; 1000 TRANSOM COVER CAP; 1000 TRANSOM COVER CAP
5960	35447	1	NOSE ADAPTOR	3	1186.4 NOSE ADAPTOR; 1186.4 NOSE ADAPTOR; 1186.4 NOSE ADAPTOR; 1186.4 NOSE ADAPTOR; 1186.4 NOSE ADAPTOR
5960	35447	2	NOSE ADAPTOR	33.799999999997	1417 NOSE ADAPTOR; 1417 NOSE ADAPTOR; 1022.4 NOSE ADAPTOR; 1022.4 NOSE ADAPTOR; 1022.4 NOSE ADAPTOR
5960	35447	21	NOSE ADAPTOR	73	1172.4 NOSE ADAPTOR; 1172.4 NOSE ADAPTOR; 1172.4 NOSE ADAPTOR; 1172.4 NOSE ADAPTOR; 1172.4 NOSE ADAPTOR
5960	35447	27	NOSE ADAPTOR	361	5594 NOSE ADAPTOR
5960	35447	1	NOSE ADAPTOR	428.4	1417 NOSE ADAPTOR; 1022.4 NOSE ADAPTOR; 1022.4 NOSE ADAPTOR; 1022.4 NOSE ADAPTOR; 1022.4 NOSE ADAPTOR
5960	35447	1	NOSE ADAPTOR	823	1022.4 NOSE ADAPTOR; 1022.4 NOSE ADAPTOR; 1022.4 NOSE ADAPTOR; 1022.4 NOSE ADAPTOR; 1022.4 NOSE ADAPTOR
5960	35405	1	ADAPTOR	115	1164 ADAPTOR; 1164 ADAPTOR; 1164 ADAPTOR; 1164 ADAPTOR; 1164 ADAPTOR
5960	35405	4	ADAPTOR	185	1150 ADAPTOR; 1150 ADAPTOR; 1150 ADAPTOR; 1150 ADAPTOR; 1150 ADAPTOR
5960	35405	1	ADAPTOR	335	1150 ADAPTOR; 1150 ADAPTOR; 1150 ADAPTOR; 1150 ADAPTOR; 1000 ADAPTOR
5960	35405	6	ADAPTOR	361	5594 ADAPTOR
5960	35405	1	ADAPTOR	935	1000 ADAPTOR; 1000 ADAPTOR; 1000 ADAPTOR; 1000 ADAPTOR; 1000 ADAPTOR
6000	32877	1	SHOE BRACKET	159	172 172 172

Utilized parts

Length	Material	Quantity	Label
1417	2730	4	FULL MULLION (195mm)
5594	2730	27	FULL MULLION (195mm)
1186.4	2633	10	FULLTRANSOM (192mm)
1172.4	2633	105	FULLTRANSOM (192mm)
1022.4	2633	15	FULLTRANSOM (192mm)
1417	32374	4	PRESSURE PLATE
1159	32374	10	PRESSURE PLATE
995	32374	15	PRESSURE PLATE
1145	32374	105	PRESSURE PLATE
5594	32374	27	PRESSURE PLATE
1417	32372	4	MULLION COVER CAP
5594	32372	27	MULLION COVER CAP
1164	32373	10	TRANSOM COVER CAP
1150	32373	105	TRANSOM COVER CAP
1000	32373	15	TRANSOM COVER CAP
1186.4	35447	5	NOSE ADAPTOR
1417	35447	5	NOSE ADAPTOR
1022.4	35447	15	NOSE ADAPTOR
1172.4	35447	105	NOSE ADAPTOR
5594	35447	27	NOSE ADAPTOR
1164	35405	5	ADAPTOR
1150	35405	24	ADAPTOR

1000	35405	6	ADAPTOR
5594	35405	6	ADAPTOR
172	32877	40	SHOE BRACKET

Utilized bars

Length	Material	Quantity	Label
5960	2730	28	FULL MULLION (195mm)
5960	2633	26	FULLTRANSOM (192mm)
5960	32374	54	PRESSURE PLATE
5960	32372	28	MULLION COVER CAP
5960	32373	26	TRANSOM COVER CAP
5960	35447	53	NOSE ADAPTOR
5960	35405	13	ADAPTOR
6000	32877	2	SHOE BRACKET

Reused waste

Length	Material	Quantity
272	2730	1
361	2730	27
3	2633	2
73	2633	21
823	2633	3
46	32374	3
74	32374	1
210	32374	20
361	32374	27
510	32374	1
960	32374	1
1960	32374	1
272	32372	1
361	32372	27
115	32373	2
185	32373	21
935	32373	3
3	35447	1

20/37

33.7999999999997	35447	2
73	35447	21
361	35447	27
428.4	35447	1
823	35447	1
115	35405	1
185	35405	4
335	35405	1
361	35405	6
935	35405	1
159	32877	1
4761	32877	1

Disposed wastes

Length	Material	Quantity

Statistics for each type of material: 1D

Material	Total used length	Reused waste	Disposed wastes	Size of used bars	Price	
2730	156706	9747	272	166880	0	5
2633	150302	2469	1533	154960	0	15
32374	303446	1960	960	321840	0	30
32372	156706	9747	272	166880	0	5
32373	147390	2805	3885	154960	0	15
35447	302493	823	428.4	315880	0	26
35405	72984	935	2166	77480	0	21
32877	6880	4761	159	12000	0	40

Cuts

Length	Material	Quantity	Label	Waste	Cuts

21/37

5960	2730	1	FULL MULLION (195mm)	272	(1417; FULL MULLION (195mm))+(1417; FULL MULLION (195mm))+(1417; FULL MULLION (195mm))+(1417; FULL MULLION (195mm))
5960	2730	27	FULL MULLION (195mm)	361	(5594; FULL MULLION (195mm))
5960	2633	2	FULLTRANSOM (192mm)	3	(1186.4; FULLTRANSOM (192mm))+(1186.4; FULLTRANSOM (192mm))+(1186.4; FULLTRANSOM (192mm))+(1186.4; FULLTRANSOM (192mm))+(1186.4; FU...

5960	2633	21	FULLTRANSOM (192mm)	73	(1172.4; FULLTRANSOM (192mm))+(1172.4; FULLTRANSOM (192mm))+(1172.4; FULLTRANSOM (192mm))+(1172.4; FULLTRANSOM (192mm))+(1172.4; FU...
5960	2633	3	FULLTRANSOM (192mm)	823	(1022.4; FULLTRANSOM (192mm))+(1022.4; FULLTRANSOM (192mm))+(1022.4; FULLTRANSOM (192mm))+(1022.4; FULLTRANSOM (192mm))+(1022.4; FU...

5960	32374	3	PRESSURE PLATE	46	(1417; PRESSURE PLATE) +(1159; PRESSURE PLATE) +(1159; PRESSURE PLATE) +(1159; PRESSURE PLATE) +(995; PRESSURE PLATE)
5960	32374	1	PRESSURE PLATE	74	(1417; PRESSURE PLATE) +(1159; PRESSURE PLATE) +(1145; PRESSURE PLATE) +(1145; PRESSURE PLATE) +(995; PRESSURE PLATE)

5960	32374	20	PRESSURE PLATE	210	(1145; PRESSURE PLATE) +(1145; PRESSURE PLATE) +(1145; PRESSURE PLATE) +(1145; PRESSURE PLATE) +(1145; PRESSURE PLATE)
5960	32374	27	PRESSURE PLATE	361	(5594; PRESSURE PLATE)
5960	32374	1	PRESSURE PLATE	510	(1145; PRESSURE PLATE) +(1145; PRESSURE PLATE) +(1145; PRESSURE PLATE) +(995; PRESSURE PLATE) +(995; PRESSURE PLATE)

5960	32374	1	PRESSURE PLATE	960	(995; PRESSURE PLATE) +(995; PRESSURE PLATE) +(995; PRESSURE PLATE) +(995; PRESSURE PLATE) +(995; PRESSURE PLATE)
5960	32374	1	PRESSURE PLATE	1960	(995; PRESSURE PLATE) +(995; PRESSURE PLATE) +(995; PRESSURE PLATE) +(995; PRESSURE PLATE)
5960	32372	1	MULLION COVER CAP	272	(1417; MULLION COVER CAP)+(1417; MULLION COVER CAP)+(1417; MULLION COVER CAP)+(1417; MULLION COVER CAP)

5960	32372	27	MULLI ON COVER CAP	361	(5594; MULLIO N COVER CAP)
5960	32373	2	TRANS OM COVER CAP	115	(1164; TRANS OM COVER CAP)+(1 164; TRANS OM COVER CAP)+(1 164; TRANS OM COVER CAP)+(1 164; TRANS OM COVER CAP)+(1 164; TRANS OM COVER CAP)
5960	32373	21	TRANS OM COVER CAP	185	(1150; TRANS OM COVER CAP)+(1 150; TRANS OM COVER CAP)+(1 150; TRANS OM COVER CAP)+(1 150; TRANS OM COVER CAP)+(1 150; TRANS OM COVER CAP)

27/37

5960	32373	3	TRANS OM COVER CAP	935	(1000; TRANS OM COVER CAP)+(1 000; TRANS OM COVER CAP)+(1 000; TRANS OM COVER CAP)+(1 000; TRANS OM COVER CAP)+(1 000; TRANS OM COVER CAP)
5960	35447	1	NOSE ADAPT OR	3	(1186.4; NOSE ADAPT OR)+(11 86.4; NOSE ADAPT OR)+(11 86.4; NOSE ADAPT OR)+(11 86.4; NOSE ADAPT OR)+(11 86.4; NOSE ADAPT OR)

5960	35447	2	NOSE ADAPTOR	33.7999999999997	(1417; NOSE ADAPTOR)+(1417; NOSE ADAPTOR)+(1022.4; NOSE ADAPTOR)+(1022.4; NOSE ADAPTOR)+(1022.4; NOSE ADAPTOR)
5960	35447	21	NOSE ADAPTOR	73	(1172.4; NOSE ADAPTOR)+(1172.4; NOSE ADAPTOR)+(1172.4; NOSE ADAPTOR)+(1172.4; NOSE ADAPTOR)+(1172.4; NOSE ADAPTOR)
5960	35447	27	NOSE ADAPTOR	361	(5594; NOSE ADAPTOR)

5960	35447	1	NOSE ADAPTOR	428.4	(1417; NOSE ADAPTOR)+(1022.4; NOSE ADAPTOR)+(1022.4; NOSE ADAPTOR)+(1022.4; NOSE ADAPTOR)+(1022.4; NOSE ADAPTOR)
5960	35447	1	NOSE ADAPTOR	823	(1022.4; NOSE ADAPTOR)+(1022.4; NOSE ADAPTOR)+(1022.4; NOSE ADAPTOR)+(1022.4; NOSE ADAPTOR)+(1022.4; NOSE ADAPTOR)
5960	35405	1	ADAPTOR	115	(1164; ADAPTOR)+(1164; ADAPTOR)+(1164; ADAPTOR)+(1164; ADAPTOR)+(1164; ADAPTOR)

5960	35405	4	ADAPTOR	185	(1150; ADAPTOR)+(1150; ADAPTOR)+(1150; ADAPTOR)+(1150; ADAPTOR)+(1150; ADAPTOR)
5960	35405	1	ADAPTOR	335	(1150; ADAPTOR)+(1150; ADAPTOR)+(1150; ADAPTOR)+(1150; ADAPTOR)+(1000; ADAPTOR)
5960	35405	6	ADAPTOR	361	(5594; ADAPTOR)
5960	35405	1	ADAPTOR	935	(1000; ADAPTOR)+(1000; ADAPTOR)+(1000; ADAPTOR)+(1000; ADAPTOR)+(1000; ADAPTOR)

6000	32877	1	SHOE BRACKET	159	(172; SHOE BRACKET)+(172; SHOE BRACKET)+(172; SHOE BRACKET)+(172; SHOE BRACKET)+(172; SHOE BRACKET)+(172; SHOE BRACKET)+(172; SHOE BRACKET)+(172; SHOE BRACKET)+(172; SHOE BRACKET)+(172; SHOE BRACKET)+(172; SHOE BRACKET)+(172; SHOE BRACKET)+(172; SHOE BRACKET)+(172; SHOE BRACKET)+(172; SHOE BRACKET)+(172; SHOE BRACK

32/37

6000	32877	1	SHOE BRACKET	4761	(172; SHOE BRACKET)+(172; SHOE BRACKET)+(172; SHOE BRACKET)+(172; SHOE BRACKET)+(172; SHOE BRACKET)+(172; SHOE BRACKET)

Miscellaneous

Parameter	Value
Total used length	1296907
All recycled waste.	33247
All discarded waste.	9675.4
Total stock waste.	1370880
Price	0
	157
running time	0h:0m:0s:177ms

DETAIL 02

SD-2001

SCALE 1:2 MTS

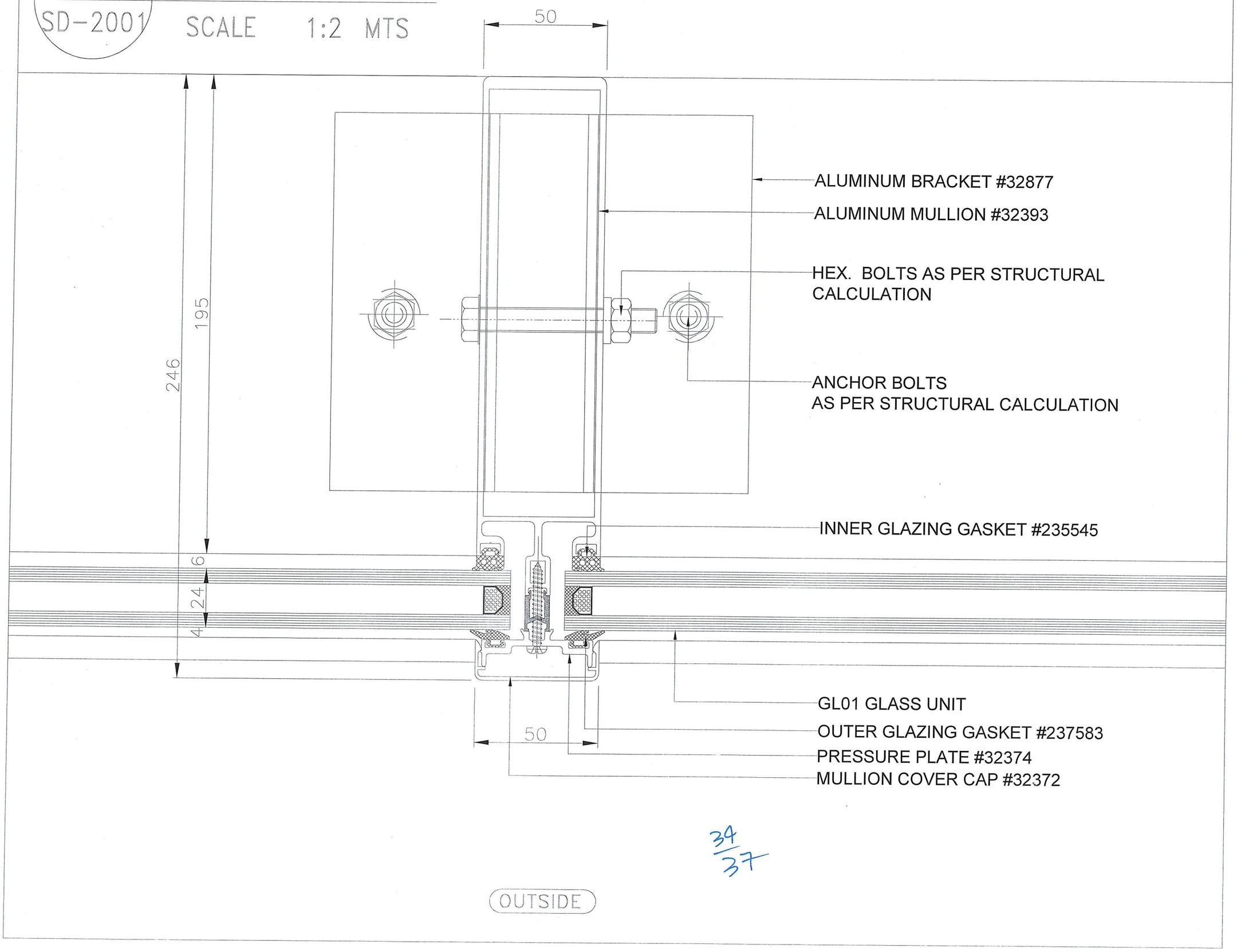

34/37

DETAIL 03

SD-2001

SCALE 1:2 MTS

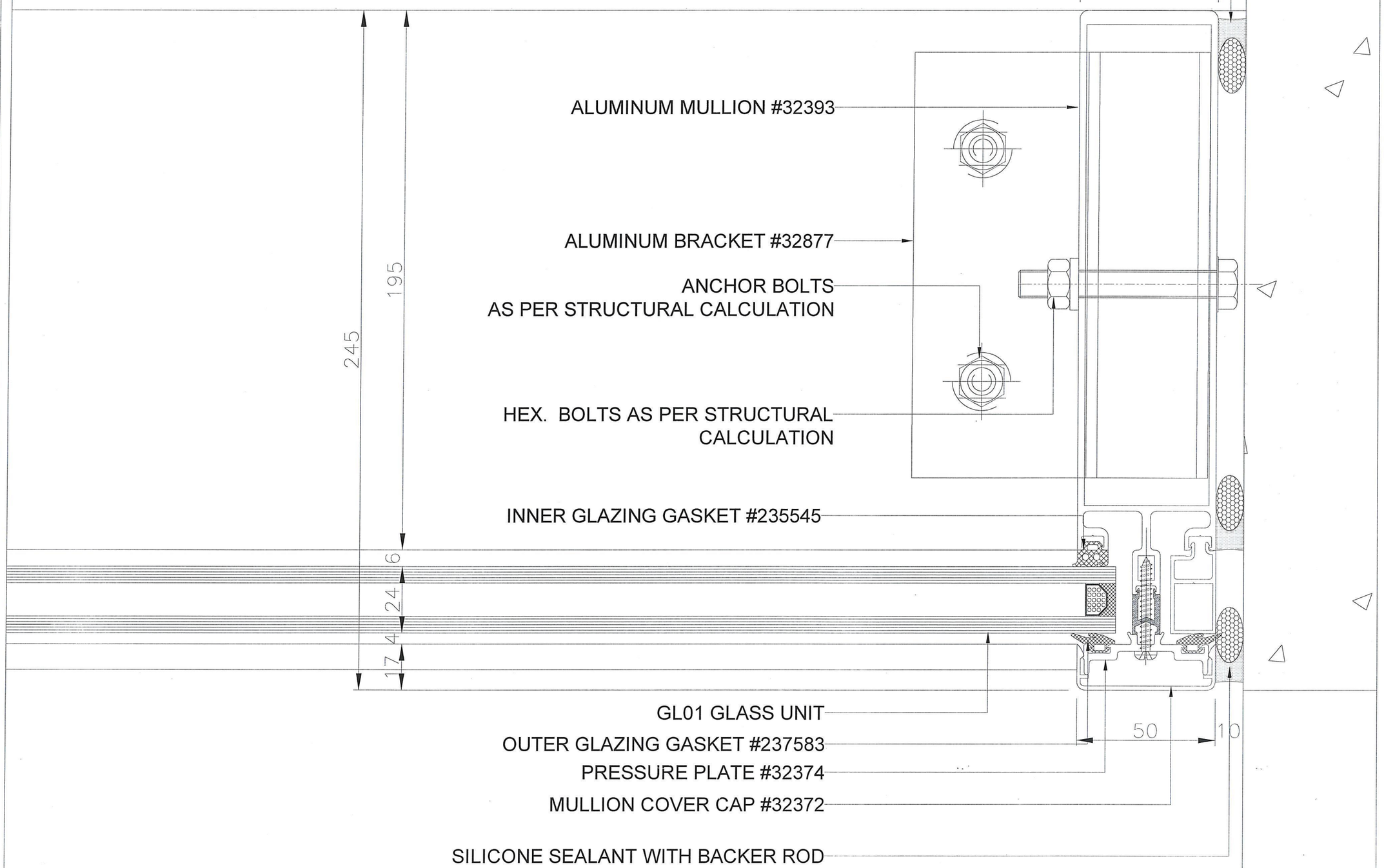

35/37

DETAIL 05

SD-2001 SCALE 1:2 MTS

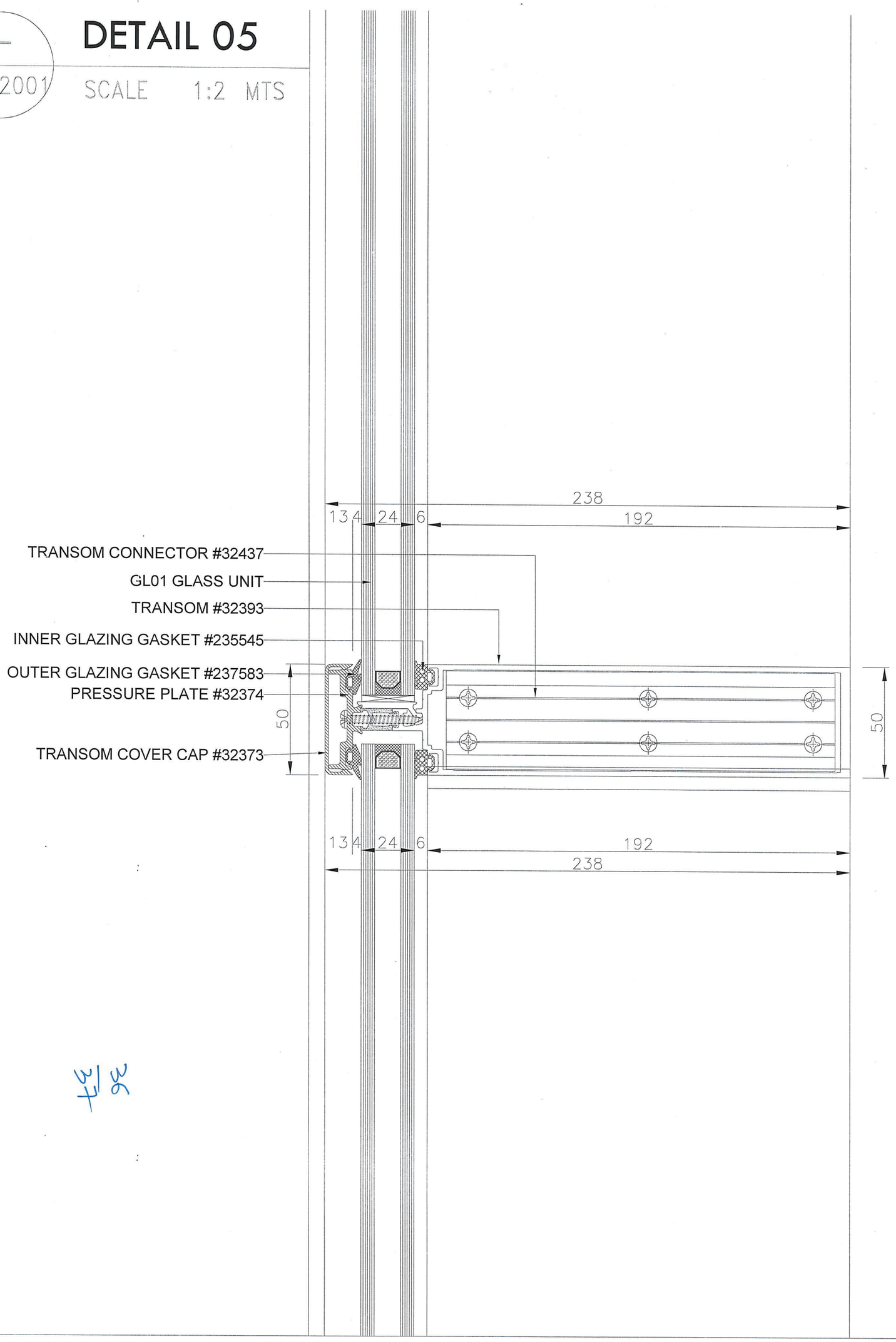

DETAIL 06

SD-2001

SCALE 1:2 MTS

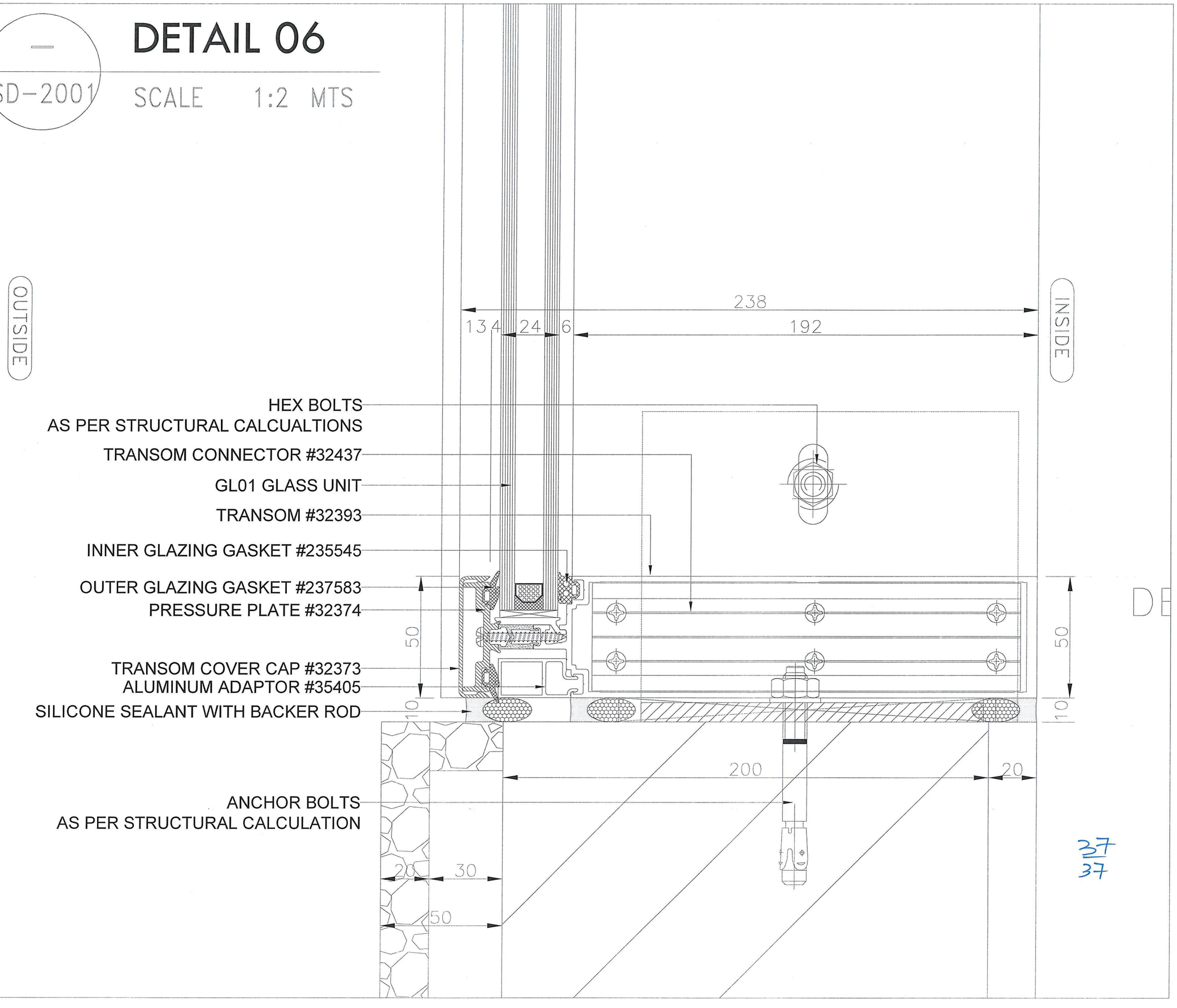

37
37