ACL-COVER PAGE

TECHNICAL DEPARTMENT
QR 7.3.0.8 Rev A 2019

PROJECT NAME : KAP5 SITES 12, 69 & 157
PROJECT CODE : 10225
ITEM REF. No. : W01-MAIN BUILDING
QUANTITY OF UNITS: 38 UNITS
SYSTEM- ALUPCO SYSTEM

Complete	Partial	Additional	Sample
YES	X	X	X

SITE 120
MAIN BUILDING

Aluminum Color : **7022**

ACL No : 023
E.M. Name. : W.H.
DATE : 08.07.2023
CC: Prod / QC / Eng'g / Proj.
REV. 00
Total No. of Pages 02

SN.	MATERIAL	SYSTEM	CODE	DESCRIPTION	QTY	AREA	Use Bar Length	Remarks
1	ALUMINUM	ALUPCO	W01	HINGED WINDOW	36	30.89	6000 6100	
2	ALUMINUM	ALUPCO	W01-1	HINGED WINDOW	1	0.86	6000 6100	
3	ALUMINUM	ALUPCO	W01-33	HINGED WINDOW	1	0.75	6000 6100	
				TOTAL.	38	32.49 SQM		

NOTES : SEE ATTACHED DRAWING AND DETAILS. GCL-019 MTO-012&014

Prepared By :	Approved By :	Approved By :	Approved By :	Received By :
Engr. Walid Hassan.		Eng. Osama Abu-Halima.	Eng. Ahmed Helal.	Eng. Hamed.
Project Engineer.		Technical Manager.	Technical Director.	Operation Manager.

10/6/2023

ALUSYSTEMS
CONTROLLED COPY
DATE: 10/6/23
SIGN:

10/6/2023

1/25

NO.REV.ACL-CL-01

ALUMINIUM CONSTRUCTION SYSTEMS FACTORY CORP.

CUTTING LIST CHECKLIST

Project No:	10225
Project Name:	del - 23
Client/Company Name:	
Drawings NO & REV.:	KAP-05

Date: 8 / 06 / 2023

P

S/N	V	YES	NO	ACTION
*	Project Name, Date and Production Order Number are correctly mentioned?	✓		
*	Site measurements checked and confirmed with Site Manager / SURVEYOR?	✓		
*		✓		
*	Shop Drawings & Sectional Details are correct & approved and attached to Cutting List?	✓		
*	Opening Directions, Inside / Outside, Left / Right are correctly mentioned?	✓		
*	Elevation is looking from the Outside of the Unit as it always should be?	✓		
*	Total Quantity for each unit is correct as in the shop drawings?	✓		
*	Powder Coating Ral Colors are correctly mentioned?(powder coating / anodized....)	✓		
*	Main Profile Sections are as per approved shop drawings?	✓		
*	Profile Section Code Numbers are Correct?	✓		
*	Profile Section Lengths are Correct?	✓		
*	Profile Section Cutting Degrees are Correct? (45 / 90)	✓		
*	Optimized Bars to be cut from, are correctly mentioned?	✓		
*	Accessories are as per approved Shop Drawings, Sample Board and Spec	✓		
*	Accessories Code Numbers are Correct?	✓		
*	Accessories Quantities are Correct?	✓		
*	Did you hold any glass or aluminum or steel	✓		
*	Have you checked the (Glass sizes) ? (Qtys / Specs .....)	✓		
*	Have you finished the (SCL) ? (Qtys / Specs .....)	✓		
*	Have you checked the (MTO) ? (Qtys / Specs .....)	✓		
*	Have you checked the Structural Calculation ?	✓		
*	Need to disscuss with production & projects dept. the method of deliveries for the non standard items	✓		
*	have you considered the extra size for the sheet cutting in order to accommodate with machinaries (10mm is required around all the sheet)	✓		
*	for steel sleeve inside profile: need to consider 3mm clearance between all around the inner sleeve and the profile.	✓		
*	have you considered that the length will be shorter for the steel or aluminum sheets after bending	✓		
*	Need to Have list of material for production	✓		
*	Need to Have list of material for installation	✓		
*	Need to follow the cutting list based on the same agreed optimization with production at the MTO phase (grouping concept for some particular units) in order to facilitate the production process	✓		
*	Need to mention the building No. with the code of each item. (Ex. For item in building # 7: B7-W1)	✓		
*	Need material List for aluminum profiles & accessories for each cutting list (For Main acc. Only)	✓		
*	Need details for the complete fittings to be indicated (Like glass holder size, glass clip size, insulator size, gasket size, No. of screws for cleat for curtain wall // weep holes No. for windows // Muhair for door)	✓		
*	Notching details are indicated?	✓		
*	Need to make sure that installation drawings are very clear	✓		

2/25

*	At steel cutting : for shaped plates or plates over 3 meter length or 10mm plates thickness, please leave extra 5mm or sheet thickness which are greater. - but when non-shaped panel / plates less then 3 mtr / thickness less than 10mm, we can use saw machine please don't consider any extra and no need for optimization.	✓		
*	At steel cutting : for shaped plates or plates over 3 meter length or 10mm plates thickness, need to do the optimization file and the DXF file on CD.			
*	when plates cutting: Distance betweeen plates in the sheet shall be equal to thickness of the plate.			NA
*	Need to show the steel welding type & thickness.			
*	Need to show the splice details like splice size, splice fixation and the cavity between profile and splice.			
*	Steel or aluminum finish (galvanized / liquid paint / powder coated) need to be specified.	✓		
*	Have you saved Files in server ?	✓		
*	Update the status of Cutting list in follow up table ?	✓		

NOTES:

Prepared & Checked By :	Confirmed By :	Approved By :	
Engr.	Engr.	Engr. Osama Abo Halima.	
Project Engineer		Technical Manager.	

10/6/2023

ALUSYSTEMS
Aluminum Construction Systems Factory Co.

ALUMINUM CUTTING LIST

QR 7.3.0.1 Rev A 2019

ACL NO - 023

PROJECT NAME : KAP5 SITES 12, 69 & 157

PROJECT CODE : 10225

ITEM REF. No. : W01

QUANTITY OF UNITS: 36

SYSTEM-TECHNAL

	Width	Height
	W	H
CLEAR OPENING	500	1500

SITE 120
MAIN BUILDING

Aluminum Color: **RAL-7022**

Aluminum Profiles.

SN.	Alum. Profile/ Desc	Code/Die	Dimension (mm)	Qty.	Cut Angle	Ref W/H	Use Bar Lenth	Remarks
01	OUTERT FRAME	11600	550	72	45/45	W	6000	WITH ARCHITREVS REFER ATTACHED DWG. (SIZE FROM ARCHITREVS)
02	OUTERT FRAME	11600	1550	72	45/45	H	6000	
03	SHUTTER	33061	442	72	45/45	W	6100	OPEN IN
04	SHUTTER	33061	1442	72	45/45	H	6100	OPEN IN
05	GLAZING BEAD FOR PANEL	33060	338	72	90/90	W	6000	S.C
06	GLAZING BEAD FOR PANEL	33060	1294	72	90/90	H	6000	S.C
07	FLY SCREEN	11477	432	72	45/45	W	6000	
08	FLY SCREEN	11477	1432	72	45/45	H	6000	
		Cutted pieces.		576				

Production Accessories

SN.	Description	Code/Die	Unit	Qty.	MTO NO.	Remarks
01	WINDOW HANDLE	01024U	Sets	36	MTO-10225-014	GIESSE
02	HINGES FOR HINGED WINDOW	00120U	Pcs.	72		
		TOTAL.		108		

Glazing

SN.	Code	With (mm)	Height (mm)	Qty.	Area	Glass Properties
2	OP.1-W01- MAIN BLDG	324	1324	36	15.443	6mm THK SunGuard® DS Emerald Green T +12 mm A/S + 6MM THK CLEAR GLASS TEMP WITH OBSCURED.

4/25

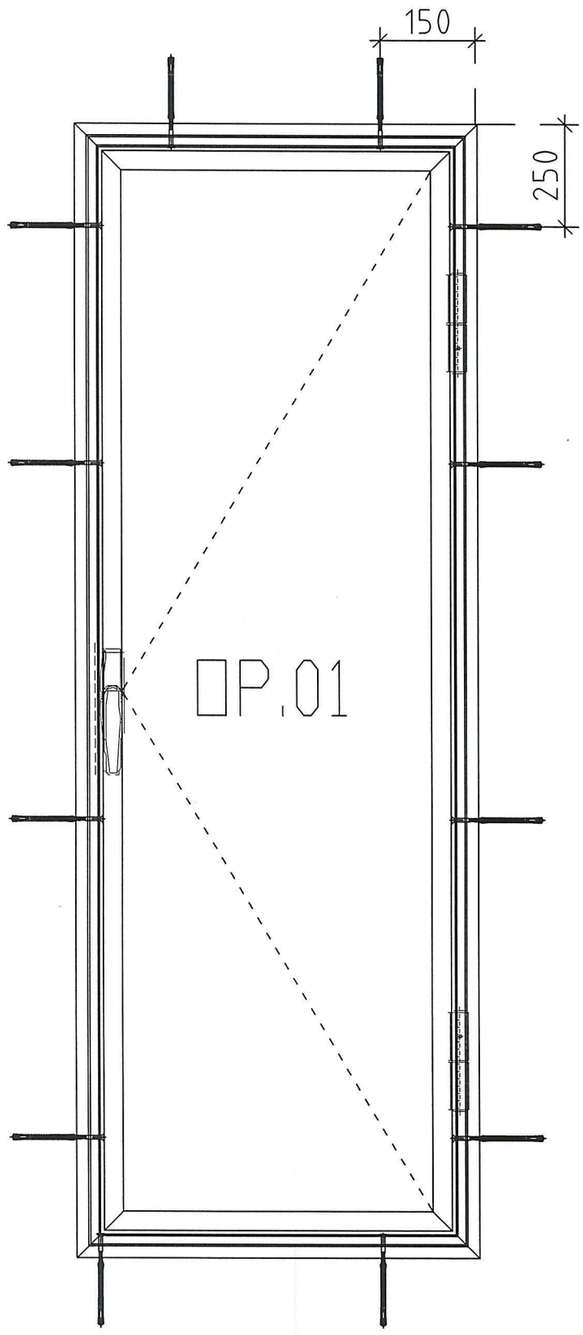

INSIDE ELEVATION

W01

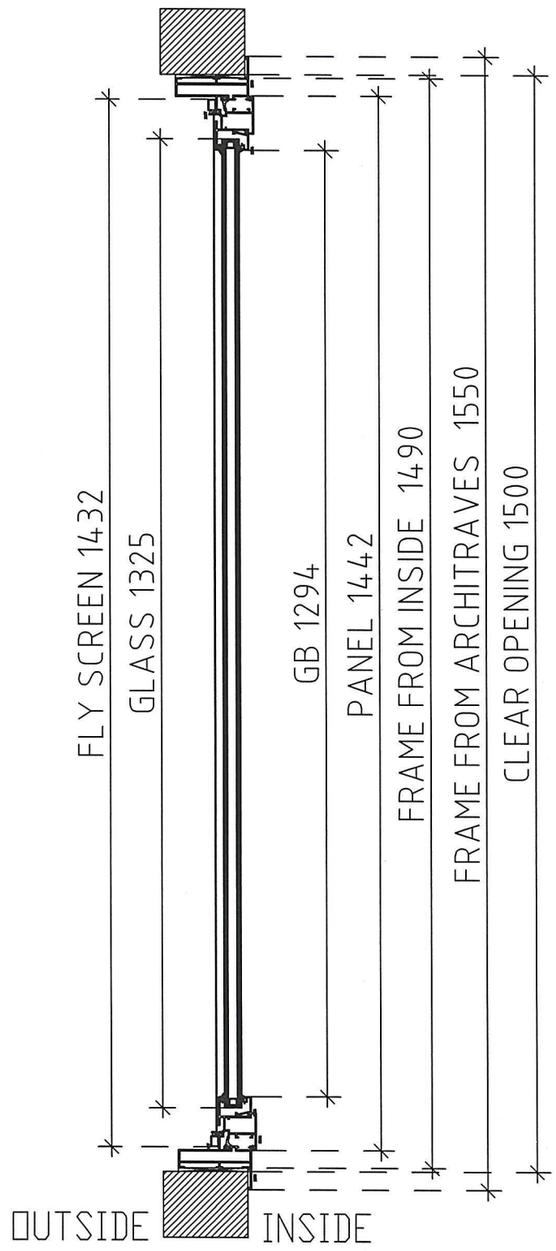

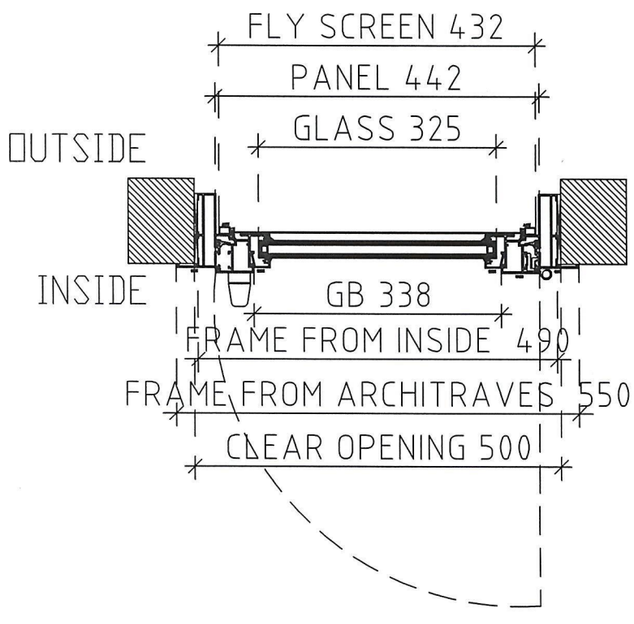

2/5

ALUSYSTEMS
Aluminum Construction Systems Factory Co.

ALUMINUM CUTTING LIST

QR 7.3.0.1 Rev A 2019

ACL NO - 023

PROJECT NAME : KAP5 SITES 12, 69 & 157

PROJECT CODE : 10225

ITEM REF. No. : W01-1

QUANTITY OF UNITS: 1

SYSTEM-TECHNAL

CLEAR OPENING	Width W	Height H
	500	1510

SITE 120
MAIN BUILDING

Aluminum Color: **RAL-7022**

Aluminum Profiles.

SN.	Alum. Profile/ Desc	Code/Die	Dimension (mm)	Qty.	Cut Angle	Ref W/H	Use Bar Lenth	Remarks
01	OUTERT FRAME	11600	550	2	45/45	W	6000	WITH ARCHITREVS REFER ATTACHED DWG. (SIZE FROM ARCHITREVS)
02	OUTERT FRAME	11600	1560	2	45/45	H	6000	
03	SHUTTER	33061	442	2	45/45	W	6100	OPEN IN
04	SHUTTER	33061	1452	2	45/45	H	6100	OPEN IN
05	GLAZING BEAD FOR PANEL	33060	338	2	90/90	W	6000	S.C
06	GLAZING BEAD FOR PANEL	33060	1304	2	90/90	H	6000	S.C
07	FLY SCREEN	11477	432	2	45/45	W	6000	
08	FLY SCREEN	11477	1442	2	45/45	H	6000	
		Cutted pieces.		16				

Production Accessories

SN.	Description	Code/Die	Unit	Qty.	MTO NO.	Remarks
01	WINDOW HANDLE	01024U	Sets	1	MTO-10225-014	GIESSE
02	HINGES FOR HINGED WINDOW	00120U	Pcs.	2		
		TOTAL.		3		

Glazing

SN.	Code	With (mm)	Height (mm)	Qty.	Area	Glass Properties
2	OP.1-W01-1- MAIN BLDG	324	1334	1	0.432	6mm THK SunGuard® DS Emerald Green T +12 mm A/S + 6MM THK CLEAR GLASS TEMP WITH OBSCURED.

6/25

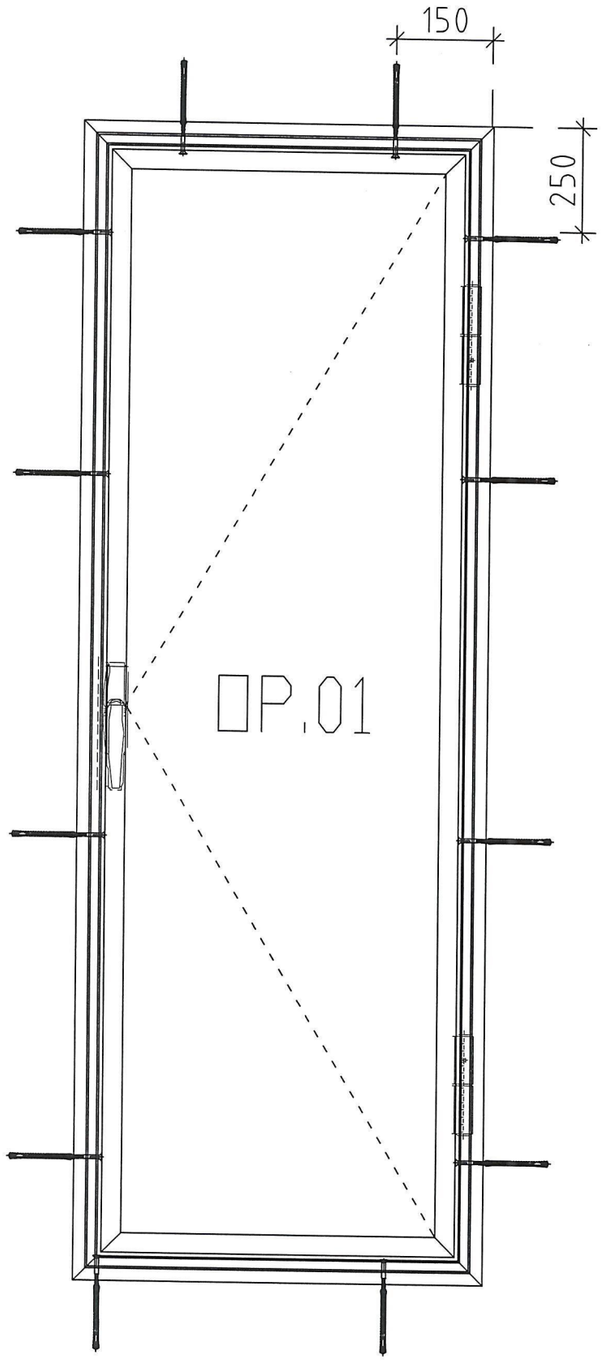

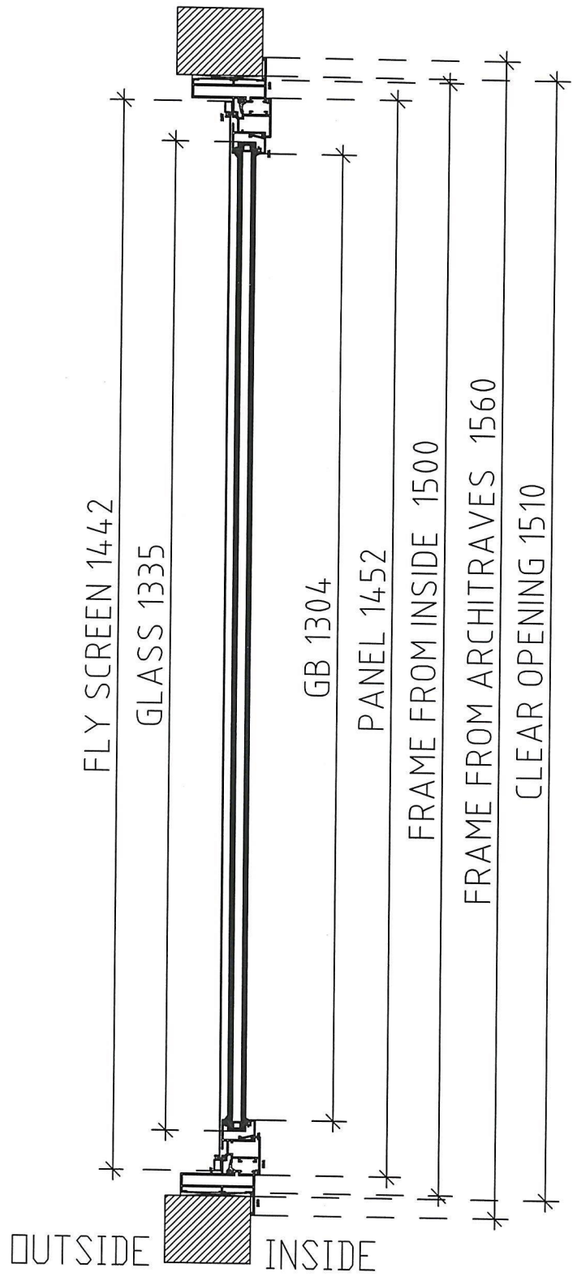

INSIDE ELEVATION

W01-1

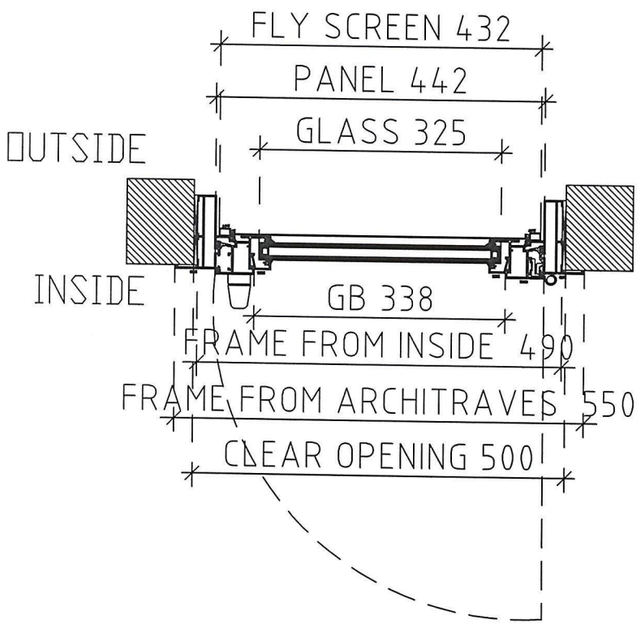

ALUSYSTEMS
Aluminum Construction Systems Factory Co.

ALUMINUM CUTTING LIST

QR 7.3.0.1 Rev A 2019

ACL NO - 023

PROJECT NAME : KAP5 SITES 12, 69 & 157

PROJECT CODE : 10225

ITEM REF. No. : W01-33

QUANTITY OF UNITS: 1

SYSTEM-TECHNAL

	Width	Height
	W	H
CLEAR OPENING	500	1308

SITE 120
MAIN BUILDING

Aluminum Color: RAL-7022

Aluminum Profiles.

SN.	Alum. Profile/ Desc	Code/Die	Dimension (mm)	Qty.	Cut Angle	Ref W/H	Use Bar Lenth	Remarks
01	OUTERT FRAME	11600	550	2	45/45	W	6000	WITH ARCHITREVS REFER ATTACHED DWG. (SIZE FROM ARCHITREVS)
02	OUTERT FRAME	11600	1358	2	45/45	H	6000	
03	SHUTTER	33061	442	2	45/45	W	6100	OPEN IN
04	SHUTTER	33061	1250	2	45/45	H	6100	OPEN IN
05	GLAZING BEAD FOR PANEL	33060	338	2	90/90	W	6000	S.C
06	GLAZING BEAD FOR PANEL	33060	1102	2	90/90	H	6000	S.C
07	FLY SCREEN	11477	432	2	45/45	W	6000	
08	FLY SCREEN	11477	1240	2	45/45	H	6000	
		Cutted pieces.		16				

Production Accessories

SN.	Description	Code/Die	Unit	Qty.	MTO NO.	Remarks
01	WINDOW HANDLE	01024U	Sets	1	MTO-10225-014	GIESSE
02	HINGES FOR HINGED WINDOW	00120U	Pcs.	2		
		TOTAL.		3		

Glazing

SN.	Code	With (mm)	Height (mm)	Qty.	Area	Glass Properties
2	OP.1-W01-33- MAIN BLDG	324	1132	1	0.367	6mm THK SunGuard® DS Emerald Green T +12 mm A/S + 6MM THK CLEAR GLASS TEMP WITH OBSCURED.

B
25

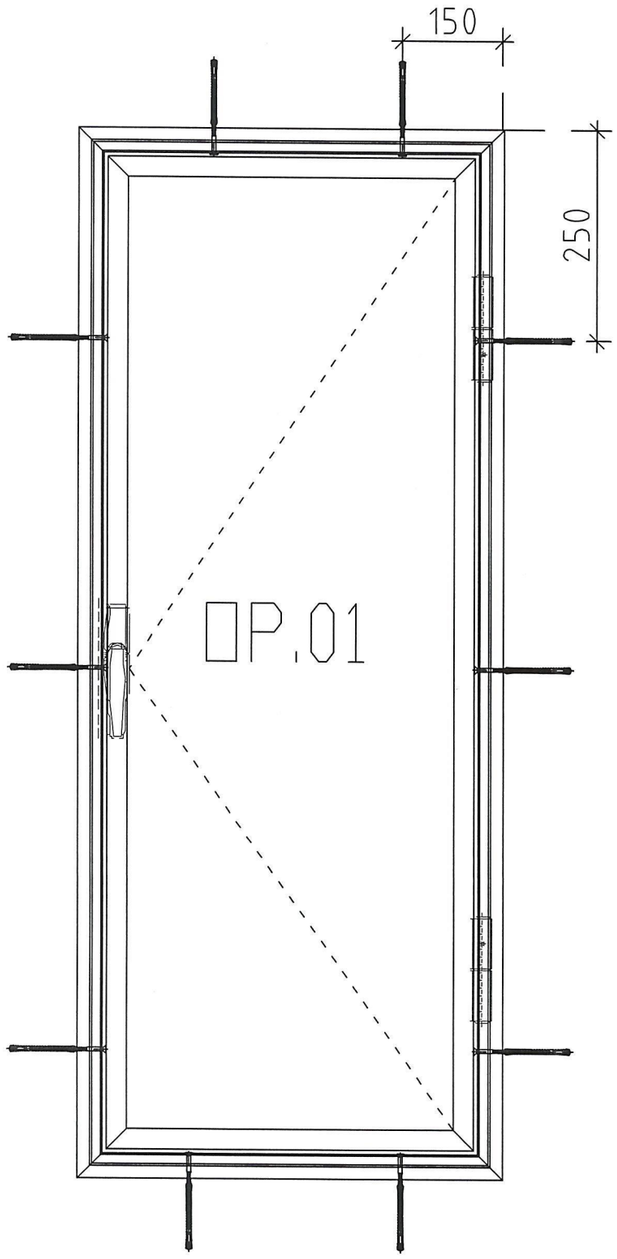

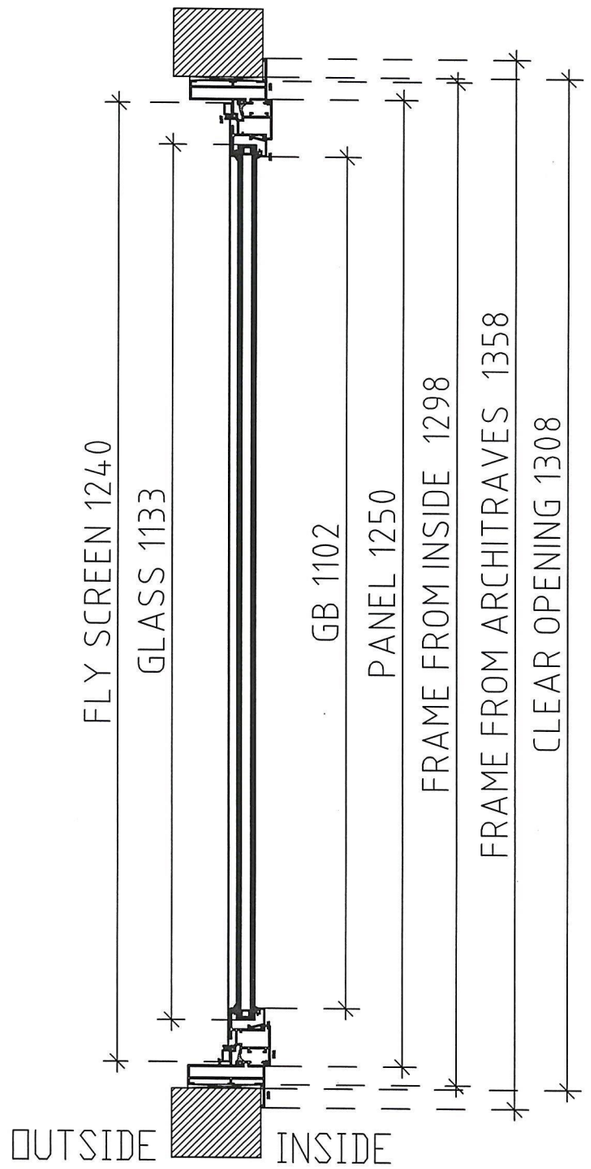

INSIDE ELEVATION

W01-33

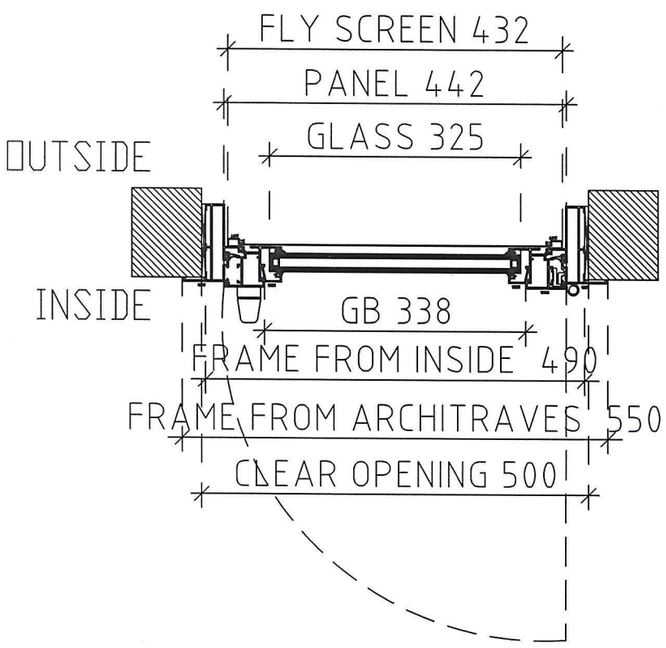

52/6

Length	Material	Quantity	Label	Waste	Graphic: 1D
6000	11600	3	OUTERT FRAME	5	1550 OUTERT FRAME; 550 OUTERT FRAME; 550 OUTERT FRAME; 550 OUTERT FRAME; 550 OUTERT FRAME; 550 OUTERT FRAME; 550 OUTERT FRAME; 550 OUTERT FRAME; 550 OUTERT FRAME
6000	11600	1	OUTERT FRAME	164	1550 OUTERT FRAME; 1550 OUTERT FRAME; 1358 OUTERT FRAME; 1358 OUTERT FRAME
6000	11600	22	OUTERT FRAME	225	1550 OUTERT FRAME; 1550 OUTERT FRAME; 1550 OUTERT FRAME; 550 OUTERT FRAME; 550 OUTERT FRAME
6000	11600	1	OUTERT FRAME	105	1560 OUTERT FRAME; 1550 OUTERT FRAME; 550 OUTERT FRAME; 550 OUTERT FRAME; 550 OUTERT FRAME; 550 OUTERT FRAME; 550 OUTERT FRAME
6000	11600	1	OUTERT FRAME	2770	1560 OUTERT FRAME; 550 OUTERT FRAME; 550 OUTERT FRAME; 550 OUTERT FRAME
6100	33061	10	SHUTTER	77	1442 SHUTTER; 1442 SHUTTER; 442 SHUTTER; 442 SHUTTER; 442 SHUTTER; 442 SHUTTER; 442 SHUTTER; 442 SHUTTER; 442 SHUTTER
6100	33061	2	SHUTTER	57	1442 SHUTTER; 1442 SHUTTER; 1442 SHUTTER; 1250 SHUTTER; 442 SHUTTER
6100	33061	11	SHUTTER	312	1442 SHUTTER; 1442 SHUTTER; 1442 SHUTTER; 1442 SHUTTER
6100	33061	1	SHUTTER	398	1452 SHUTTER; 1452 SHUTTER; 1442 SHUTTER; 442 SHUTTER; 442 SHUTTER; 442 SHUTTER
6100	33061	1	SHUTTER	4206	1442 SHUTTER; 442 SHUTTER
6000	33060	8	GLAZING BEAD FOR PANEL	45	1294 GLAZING BEAD FOR PANEL; 1294 GLAZING BEAD FOR PANEL; 1294 GLAZING BEAD FOR PA; 338 GLAZING I; 338 GLAZING I; 338 GLAZING I; 338 GLAZING I; 338 GLAZING BEAD FOR PA; 338
6000	33060	11	GLAZING BEAD FOR PANEL	118	1294 GLAZING BEAD FOR PANEL; 1294 GLAZING BEAD FOR PANEL; 1294 GLAZING BEAD FOR PANEL; 1294 GLAZING BEAD FOR PA; 338 GLAZING I; 338 GLAZING BEAD FOR PANE; 338
6000	33060	1	GLAZING BEAD FOR PANEL	98	1304 GLAZING BEAD FOR PANEL; 1304 GLAZING BEAD FOR PANEL; 1294 GLAZING BEAD FOR PANEL; 1294 GLAZING BEAD FOR PA; 338 GLAZING I; 338 GLAZING BEAD FOR PAN; 338
6000	33060	1	GLAZING BEAD FOR PANEL	159	1294 GLAZING BEAD FOR PANEL; 1294 GLAZING BEAD FOR PANEL; 1102 GLAZING BEAD FOR PANEL; 1102 GLAZING BEAD FOR F; 338 GLAZING I; 338 GLAZING I; 338 GLAZING BEAD FOR PANEL; 338
6000	33060	1	GLAZING BEAD FOR PANEL	5657	338 IG BEAD FOR PANEL
6000	11477	2	FLY SCREEN	0	1442 FLY SCREEN; 1432 FLY SCREEN; 1432 FLY SCREEN; 1240 FLY SCREEN; 432 FLY SCREEN
6000	11477	10	FLY SCREEN	67	1432 FLY SCREEN; 1432 FLY SCREEN; 432 FLY SCREEN; 432 FLY SCREEN; 432 FLY SCREEN; 432 FLY SCREEN; 432 FLY SCREEN; 432 FLY SCREEN; 432 FLY SCREEN
6000	11477	12	FLY SCREEN	252	1432 FLY SCREEN; 1432 FLY SCREEN; 1432 FLY SCREEN; 1432 FLY SCREEN
6000	11477	1	FLY SCREEN	4252	432 FLY SCREEN; 432 FLY SCREEN; 432 FLY SCREEN; 432 FLY SCREEN

10/25

Utilized parts

Length	Material	Quantity	Label
1550	11600	72	OUTERT FRAME
550	11600	76	OUTERT FRAME
1358	11600	2	OUTERT FRAME
1560	11600	2	OUTERT FRAME
1442	33061	72	SHUTTER
442	33061	76	SHUTTER
1250	33061	2	SHUTTER
1452	33061	2	SHUTTER
1294	33060	72	GLAZING BEAD FOR PANEL
338	33060	76	GLAZING BEAD FOR PANEL
1304	33060	2	GLAZING BEAD FOR PANEL
1102	33060	2	GLAZING BEAD FOR PANEL
1442	11477	2	FLY SCREEN
1432	11477	72	FLY SCREEN
1240	11477	2	FLY SCREEN
432	11477	76	FLY SCREEN

Utilized bars

Length	Material	Quantity	Label
6000	11600	28	OUTERT FRAME
6100	33061	25	SHUTTER
6000	33060	22	GLAZING BEAD FOR PANEL
6000	11477	25	FLY SCREEN

11/25

Reused waste

5	11600	3
164	11600	1
225	11600	22
105	11600	1
2770	11600	1
77	33061	10
57	33061	2
312	33061	11
398	33061	1
4206	33061	1
45	33060	8
118	33060	11
98	33060	1
159	33060	1
5657	33060	1
67	11477	10
252	11477	12
4252	11477	1

Disposed wastes

Length	Material	Quantity

Statistics for each type of material: 1D

Material	Total used length	Reused waste	Disposed wastes	Size of used bars	Price	
11600	159236	2770	105	168000	0	29
33061	142820	4206	398	152500	0	26
33060	123668	5657	159	132000	0	29
11477	141300	4252	3024	150000	0	22

Cuts

Length	Material	Quantity	Label	Waste	Cuts

$\frac{12}{2.5}$

6000	11600	3	OUTER T FRAME	5	(1550; OUTER T FRAME) +(550; OUTER T FRAME) +(550; OUTER T FRAME) +(550; OUTER T FRAME) +(550; OUTER T FRAME) +(550; OUTER T FRAME) +(550; OUTER T FRAME) +(550; OUTER T FRAME) +(550; OUTER T FRAME)
6000	11600	1	OUTER T FRAME	164	(1550; OUTER T FRAME) +(1550; OUTER T FRAME) +(1358; OUTER T FRAME) +(1358; OUTER T FRAME)

6000	11600	22	OUTER T FRAME	225	(1550; OUTER T FRAME) +(1550; OUTER T FRAME) +(1550; OUTER T FRAME) +(550; OUTER T FRAME) +(550; OUTER T FRAME)
6000	11600	1	OUTER T FRAME	105	(1560; OUTER T FRAME) +(1550; OUTER T FRAME) +(550; OUTER T FRAME) +(550; OUTER T FRAME) +(550; OUTER T FRAME) +(550; OUTER T FRAME) +(550; OUTER T FRAME)

6000	11600	1	OUTER T FRAME	2770	(1560; OUTER T FRAME) +(550; OUTER T FRAME) +(550; OUTER T FRAME) +(550; OUTER T FRAME)
6100	33061	10	SHUTT ER	77	(1442; SHUTT ER)+(14 42; SHUTT ER)+(44 2; SHUTT ER)+(44 2; SHUTT ER)+(44 2; SHUTT ER)+(44 2; SHUTT ER)+(44 2; SHUTT ER)+(44 2; SHUTT ER)+(44 2; SHUTT ER)

6100	33061	2	SHUTTER	57	(1442; SHUTTER)+(1442; SHUTTER)+(1442; SHUTTER)+(1250; SHUTTER)+(442; SHUTTER)
6100	33061	11	SHUTTER	312	(1442; SHUTTER)+(1442; SHUTTER)+(1442; SHUTTER)+(1442; SHUTTER)
6100	33061	1	SHUTTER	398	(1452; SHUTTER)+(1452; SHUTTER)+(1442; SHUTTER)+(442; SHUTTER)+(442; SHUTTER)+(442; SHUTTER)
6100	33061	1	SHUTTER	4206	(1442; SHUTTER)+(442; SHUTTER)

6000	33060	8	GLAZING BEAD FOR PANEL	45	(1294; GLAZING BEAD FOR PANEL) +(1294; GLAZING BEAD FOR PANEL) +(1294; GLAZING BEAD FOR PANEL) +(338; GLAZING BEAD FOR PANEL) +(338; GLAZING BEAD FOR PANEL) +(338; GLAZING BEAD FOR PANEL) +(338; GLAZING BEAD FOR PANEL) +(338; GLAZING BEAD FOR PANEL) +(338; GLAZING BEAD FOR PANEL)

6000	33060	11	GLAZING BEAD FOR PANEL	118	(1294; GLAZING BEAD FOR PANEL) +(1294; GLAZING BEAD FOR PANEL) +(1294; GLAZING BEAD FOR PANEL) +(1294; GLAZING BEAD FOR PANEL) +(338; GLAZING BEAD FOR PANEL) +(338; GLAZING BEAD FOR PANEL)

6000	33060	1	GLAZING BEAD FOR PANEL	98	(1304; GLAZING BEAD FOR PANEL) +(1304; GLAZING BEAD FOR PANEL) +(1294; GLAZING BEAD FOR PANEL) +(1294; GLAZING BEAD FOR PANEL) +(338; GLAZING BEAD FOR PANEL) +(338; GLAZING BEAD FOR PANEL)

6000	33060	1	GLAZING BEAD FOR PANEL	159	(1294; GLAZING BEAD FOR PANEL) +(1294; GLAZING BEAD FOR PANEL) +(1102; GLAZING BEAD FOR PANEL) +(1102; GLAZING BEAD FOR PANEL) +(338; GLAZING BEAD FOR PANEL) +(338; GLAZING BEAD FOR PANEL) +(338; GLAZING BEAD FOR PANEL)
6000	33060	1	GLAZING BEAD FOR PANEL	5657	(338; GLAZING BEAD FOR PANEL)
6000	11477	2	FLY SCREEN	0	(1442; FLY SCREEN)+(1432; FLY SCREEN)+(1432; FLY SCREEN)+(1240; FLY SCREEN)+(432; FLY SCREEN)

6000	11477	10	FLY SCREEN	67	(1432; FLY SCREEN)+(1432; FLY SCREEN)+(432; FLY SCREEN)+(432; FLY SCREEN)+(432; FLY SCREEN)+(432; FLY SCREEN)+(432; FLY SCREEN)+(432; FLY SCREEN)
6000	11477	12	FLY SCREEN	252	(1432; FLY SCREEN)+(1432; FLY SCREEN)+(1432; FLY SCREEN)+(1432; FLY SCREEN)
6000	11477	1	FLY SCREEN	4252	(432; FLY SCREEN)+(432; FLY SCREEN)+(432; FLY SCREEN)+(432; FLY SCREEN)

Miscellaneous

Parameter	Value

Total used length	567024
All recycled waste.	16885
All discarded waste.	3686
Total stock waste.	602500
Price	0
	106
running time	0h:0m:0s:88ms

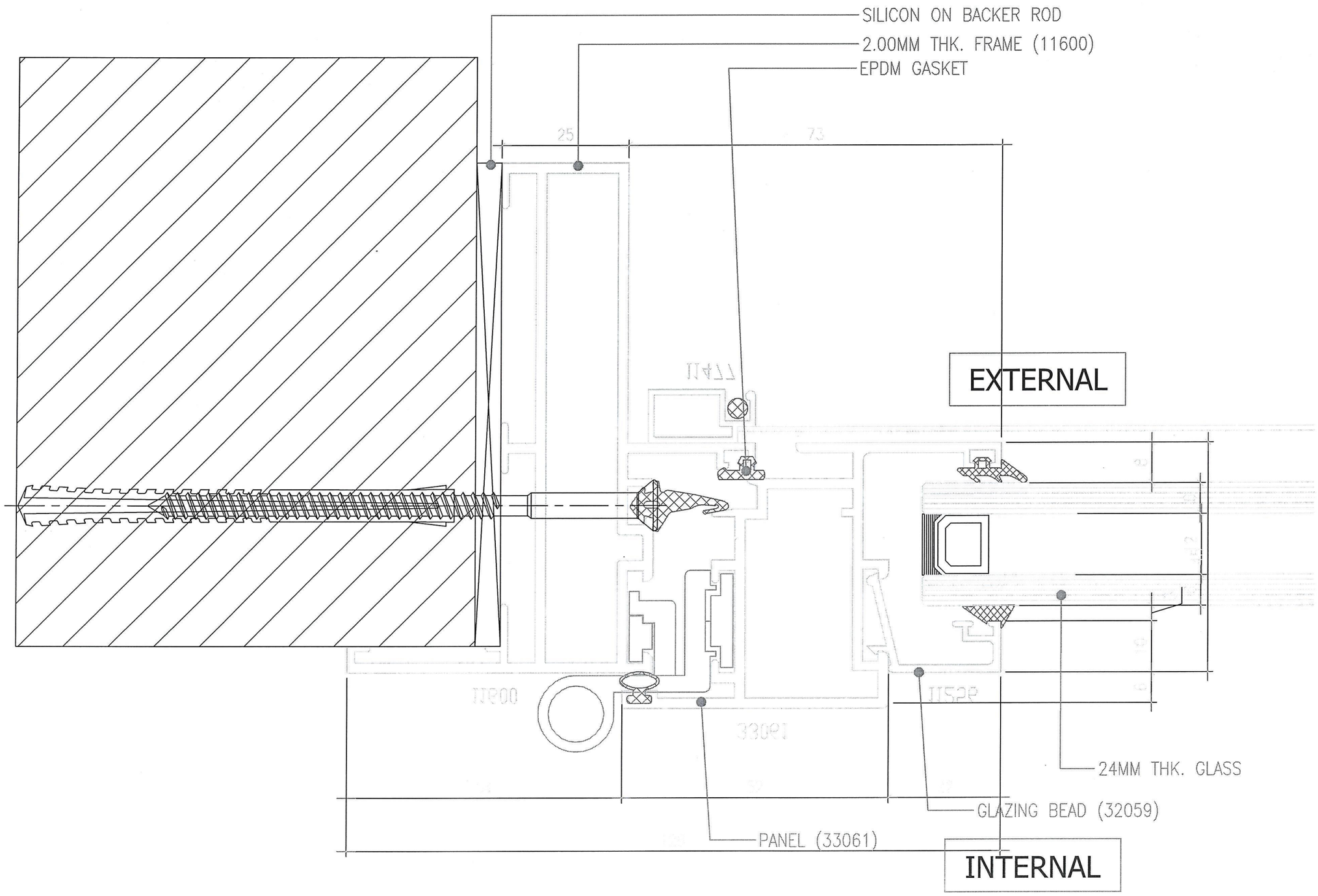
SILICON ON BACKER ROD
2.00MM THK. FRAME (11600)
EPDM GASKET
25
73
EXTERNAL
24MM THK. GLASS
GLAZING BEAD (32059)
PANEL (33061)
INTERNAL

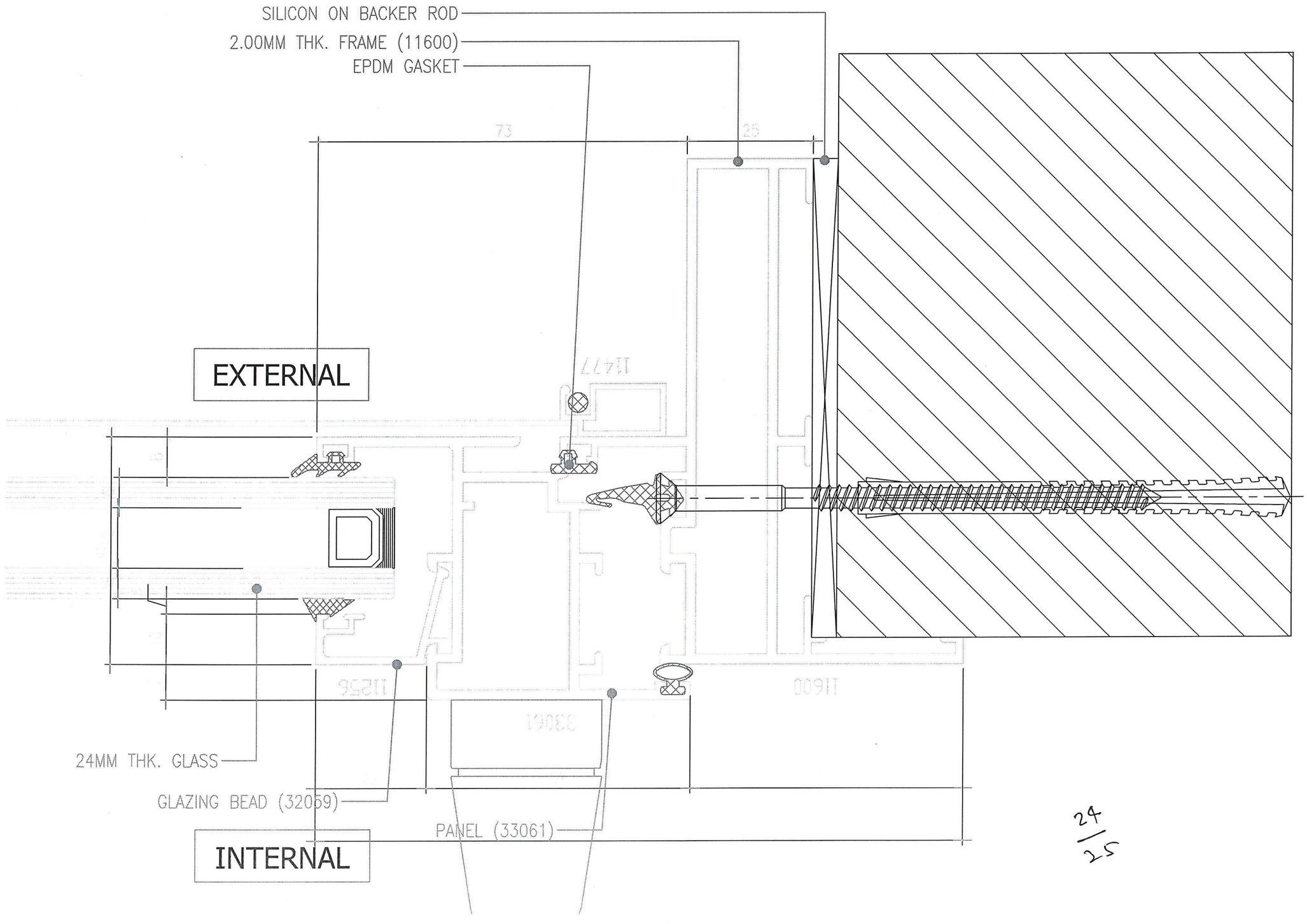
SILICON ON BACKER ROD
2.00MM THK. FRAME (11600)
EPDM GASKET
73
25
EXTERNAL
11477
11256
11600
33061
24MM THK. GLASS
GLAZING BEAD (32059)
PANEL (33061)
INTERNAL

24/25

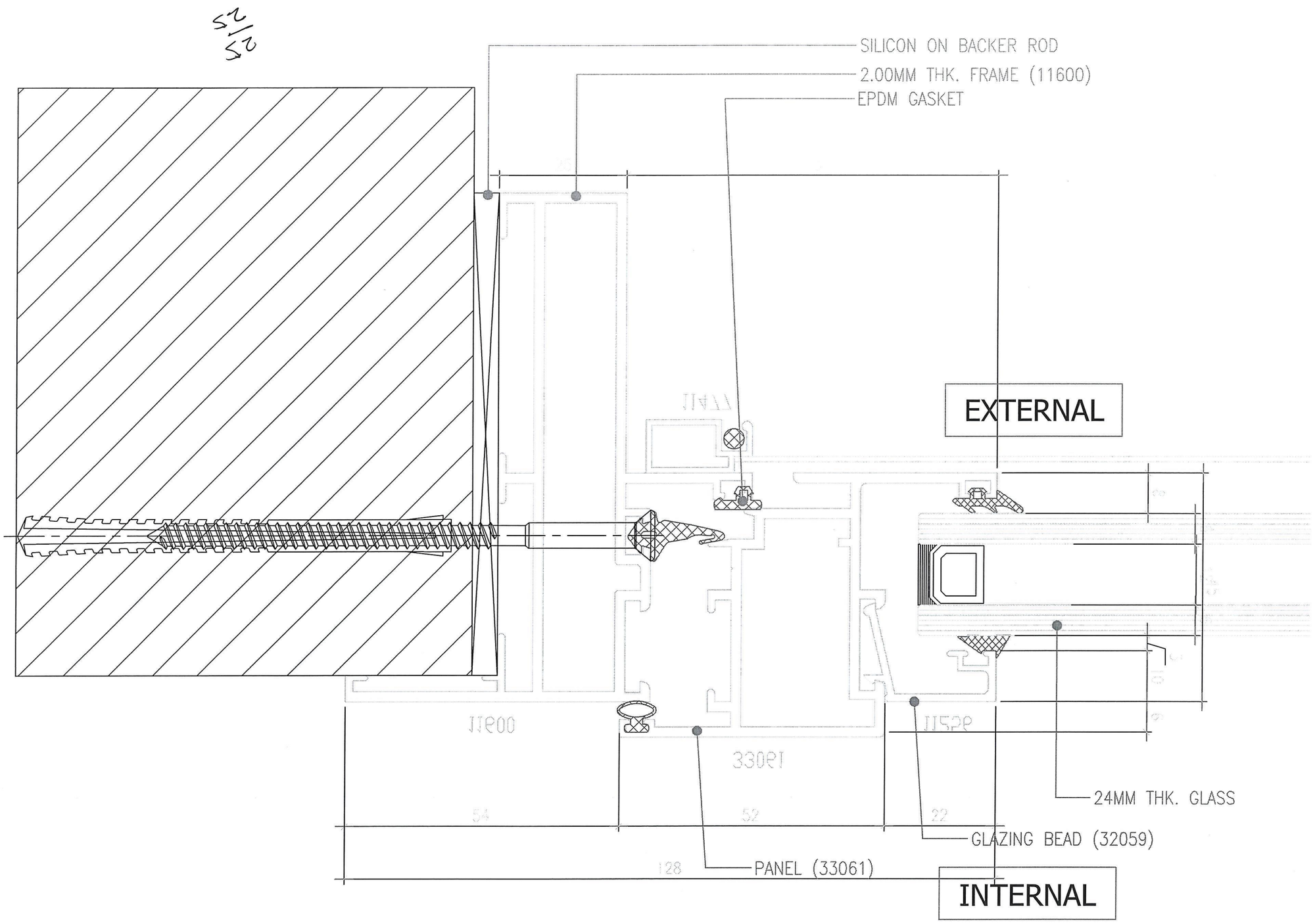
SILICON ON BACKER ROD
2.00MM THK. FRAME (11600)
EPDM GASKET
EXTERNAL
24MM THK. GLASS
GLAZING BEAD (32059)
PANEL (33061)
INTERNAL