SMPBR / Pump_board

Rev 1.0

2025-08-05

Page	Index	Page	Index	Page	Index	Page	Index
1	Cover Page	11	Peristaltic pump 4	21	.....	31	.....
2	Revision History	12	Enumeration	22	.....	32	.....
3	System	13	ADC	23	.....	33	.....
4	MCU	14	.....	24	.....	34	.....
5	Power	15	.....	25	.....	35	.....
6	Debug Interface	16	.....	26	.....	36	.....
7	CAN	17	.....	27	.....	37	.....
8	Peristaltic pump 1	18	.....	28	.....	38	.....
9	Peristaltic pump 2	19	.....	29	.....	39	.....
10	Peristaltic pump 3	20	.....	30	.....	40	.....

TOP VIEW

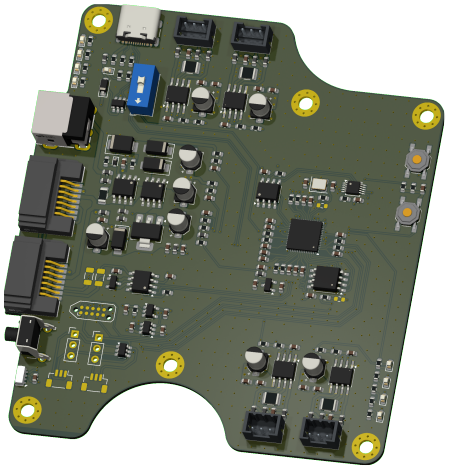

BOTTOM VIEW

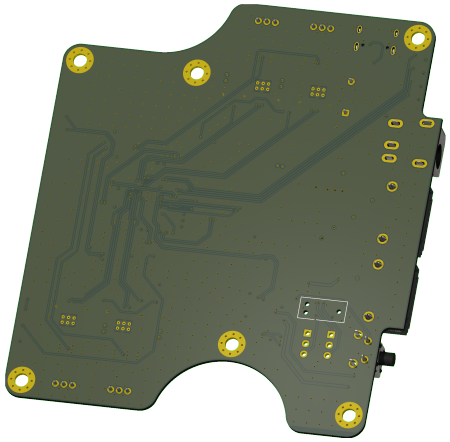

NOTES

Not fitted components are marked as X

DESIGN CONSIDERATIONS

INFO NOTE:
Example text for informational design notes.

DESIGN NOTE:
Example text for critical design notes.

LAYOUT NOTE:
Example text for critical layout notes.

Designed for: TrendBit
Designed by: Petr_Malaník

Sheet: / File: pump_board.kicad_sch	***Project: SMPBR***
Title:	***Board: Pump_board***

Size: A4	Date: 2024-12-03	GIT hash: a985fdb	**Rev: 1.0**
KiCad E.D.A. 9.0.1			Id: 1/13

Revision History

Designed for: TrendBit
Designed by: Petr_Malaník

Sheet: /Revision History/ File: revision_history.kicad_sch	**Project: SMPBR**
Title: Revision History	**Board: Pump_board**

Size: A4	Date: 2024-12-03	GIT hash: a985fdb	**Rev: 1.0**
KiCad E.D.A. 9.0.1			Id: 2/13

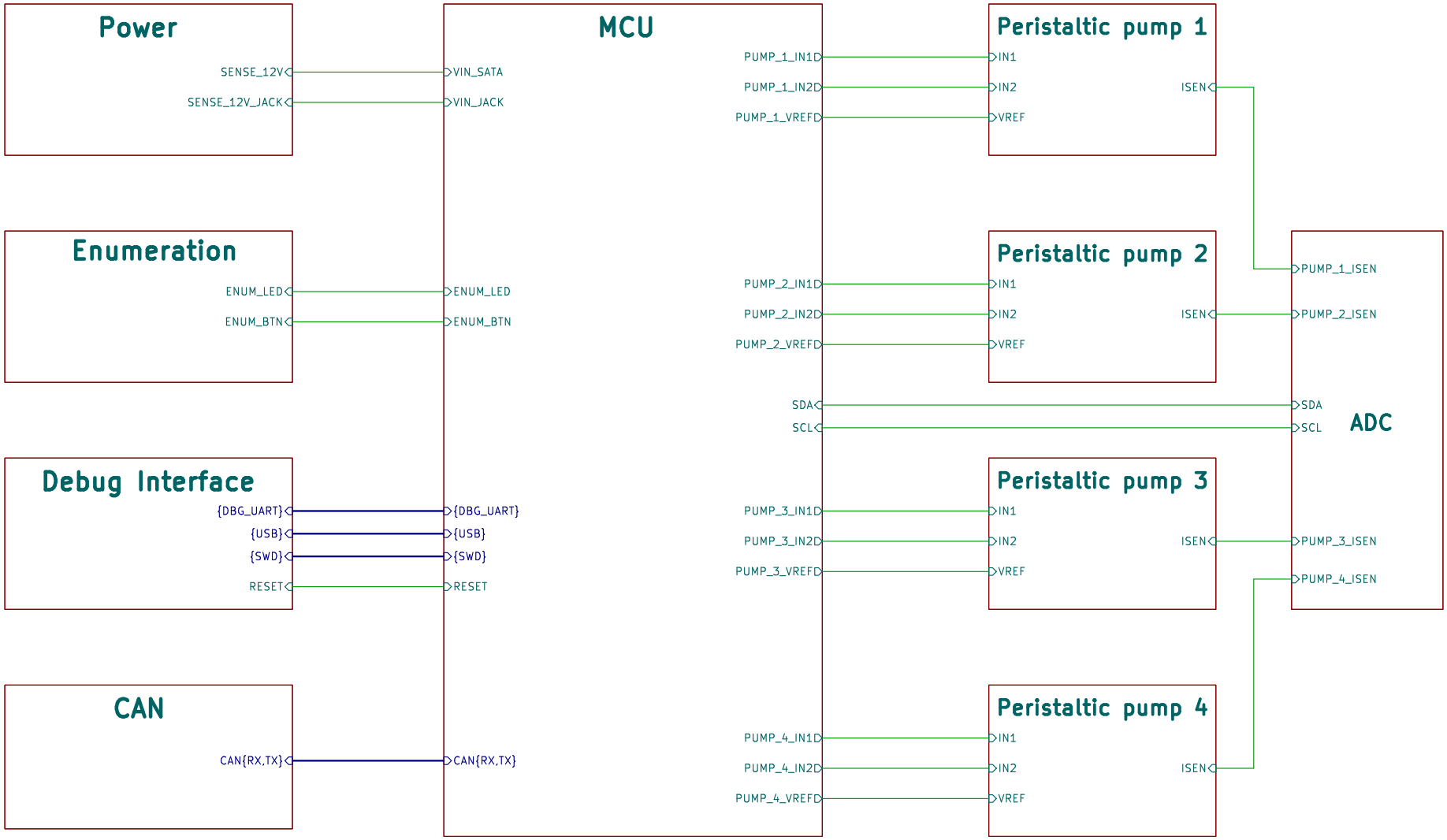

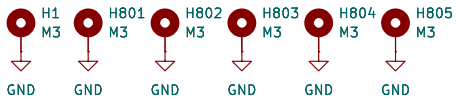

Designed for: TrendBit
Designed by: Petr_Malaník

Sheet: /System/ File: system.kicad_sch	**Project: SMPBR**
Title: System	**Board: Pump_board**

Size: A4	Date: 2024-12-03	GIT hash: a985fdb	**Rev: 1.0**
KiCad E.D.A. 9.0.1			Id: 3/13

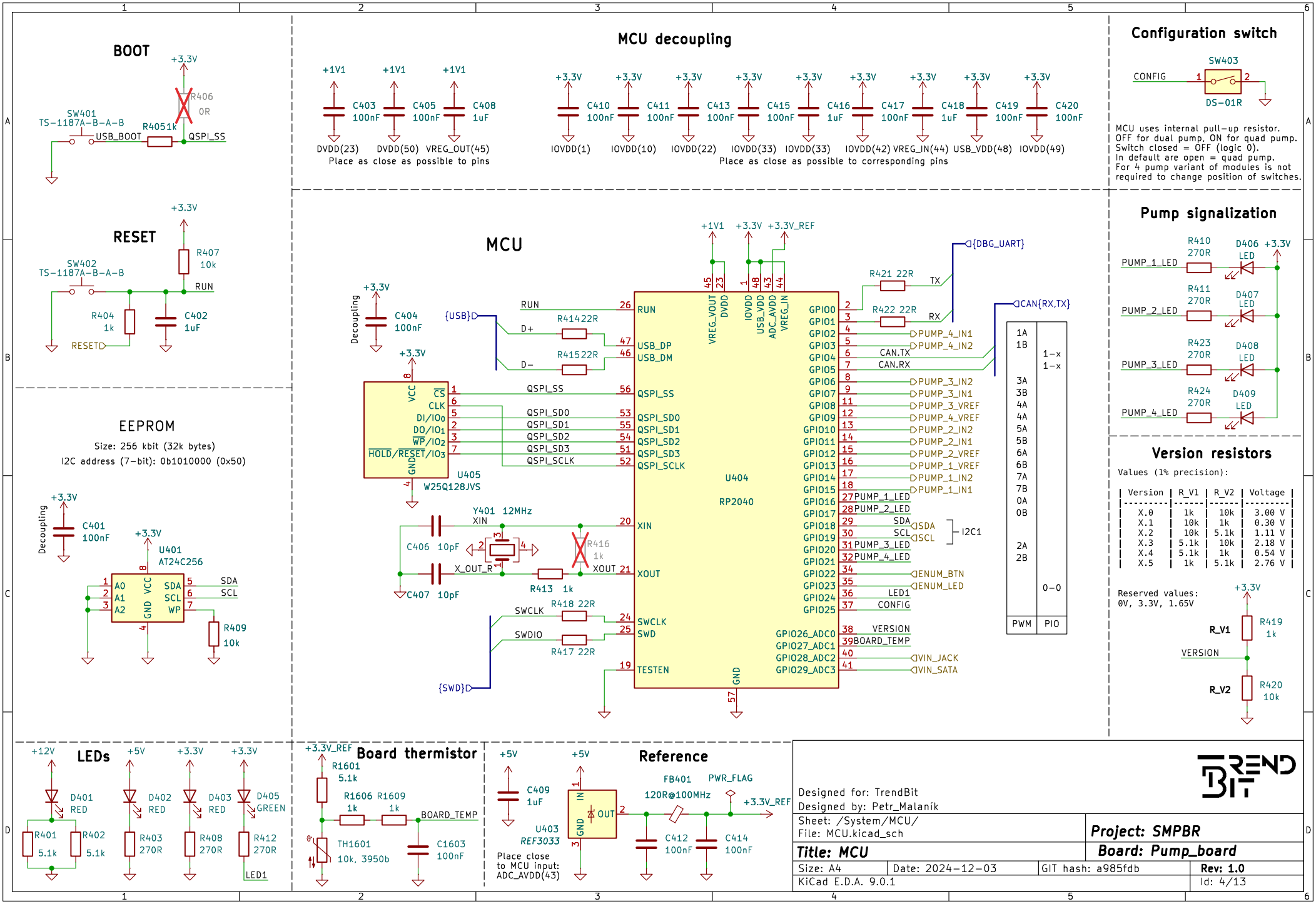
BOOT
+3.3V
R406
0R
SW401
TS-1187A-B-A-B
R4051k
USB_BOOT
QSPI_SS
RESET
+3.3V
R407
10k
SW402
TS-1187A-B-A-B
RUN
R404
1k
C402
1uF
RESET
EEPROM
Size: 256 kbit (32k bytes)
I2C address (7-bit): 0b1010000 (0x50)
+3.3V
Decoupling
C401
100nF
+3.3V
U401
AT24C256
A0
A1
A2
GND
VCC
SDA
SCL
WP
SDA
SCL
R409
10k
MCU decoupling
+1V1
C403
100nF
DVDD(23)
C405
100nF
DVDD(50)
C408
1uF
VREG_OUT(45)
Place as close as possible to pins
+3.3V
C410
100nF
IOVDD(1)
C411
100nF
IOVDD(10)
C413
100nF
IOVDD(22)
C415
100nF
IOVDD(33)
C416
1uF
IOVDD(33)
C417
100nF
IOVDD(42)
C418
1uF
VREG_IN(44)
C419
100nF
USB_VDD(48)
C420
100nF
IOVDD(49)
Place as close as possible to corresponding pins
MCU
+1V1
+3.3V
+3.3V_REF
Decoupling
C404
100nF
{USB}
RUN
D+
R41422R
D-
R41522R
QSPI_SS
QSPI_SD0
QSPI_SD1
QSPI_SD2
QSPI_SD3
QSPI_SCLK
U405
W25Q128JVS
Y401 12MHz
XIN
C406 10pF
X_OUT_R
R416
1k
XOUT
C407 10pF
R413 1k
SWCLK
R418 22R
SWDIO
R417 22R
{SWD}
U404
RP2040
VREG_VOUT
DVDD
IOVDD
USB_VDD
ADC_AVDD
VREG_IN
RUN
USB_DP
USB_DM
QSPI_SS
QSPI_SD0
QSPI_SD1
QSPI_SD2
QSPI_SD3
QSPI_SCLK
XIN
XOUT
SWCLK
SWD
TESTEN
GND
GPIO0
GPIO1
GPIO2
GPIO3
GPIO4
GPIO5
GPIO6
GPIO7
GPIO8
GPIO9
GPIO10
GPIO11
GPIO12
GPIO13
GPIO14
GPIO15
GPIO16
GPIO17
GPIO18
GPIO19
GPIO20
GPIO21
GPIO22
GPIO23
GPIO24
GPIO25
GPIO26_ADC0
GPIO27_ADC1
GPIO28_ADC2
GPIO29_ADC3
R421 22R
TX
R422 22R
RX
{DBG_UART}
CAN.TX
CAN.RX
CAN{RX,TX}
PUMP_4_IN1
PUMP_4_IN2
PUMP_3_IN2
PUMP_3_IN1
PUMP_3_VREF
PUMP_4_VREF
PUMP_2_IN2
PUMP_2_IN1
PUMP_2_VREF
PUMP_1_VREF
PUMP_1_IN2
PUMP_1_IN1
PUMP_1_LED
PUMP_2_LED
SDA
SCL
I2C1
PUMP_3_LED
PUMP_4_LED
ENUM_BTN
ENUM_LED
LED1
CONFIG
VERSION
BOARD_TEMP
VIN_JACK
VIN_SATA
1A
1B
3A
3B
4A
4A
5A
5B
6A
6B
7A
7B
0A
0B
2A
2B
1-x
1-x
0-0
PWM
PIO
Configuration switch
SW403
CONFIG
DS-01R
MCU uses internal pull-up resistor.
OFF for dual pump, ON for quad pump.
Switch closed = OFF (logic 0).
In default are open = quad pump.
For 4 pump variant of modules is not
required to change position of switches.
Pump signalization
PUMP_1_LED
R410
270R
D406
LED
+3.3V
PUMP_2_LED
R411
270R
D407
LED
PUMP_3_LED
R423
270R
D408
LED
PUMP_4_LED
R424
270R
D409
LED
Version resistors
Values (1% precision):
Version	R_V1	R_V2	Voltage
X.0	1k	10k	3.00 V
X.1	10k	1k	0.30 V
X.2	10k	5.1k	1.11 V
X.3	5.1k	10k	2.18 V
X.4	5.1k	1k	0.54 V
X.5	1k	5.1k	2.76 V
Reserved values:
0V, 3.3V, 1.65V
+3.3V
R_V1
R419
1k
VERSION
R_V2
R420
10k
LEDs
+12V
D401
RED
R401
5.1k
R402
5.1k
+5V
D402
RED
R403
270R
+3.3V
D403
RED
R408
270R
+3.3V
D405
GREEN
R412
270R
LED1
Board thermistor
+3.3V_REF
R1601
5.1k
R1606
1k
R1609
1k
BOARD_TEMP
TH1601
10k, 3950b
C1603
100nF
Reference
+5V
C409
1uF
+5V
U403
REF3033
IN
OUT
GND
Place close
to MCU input:
ADC_AVDD(43)
FB401
120R@100MHz
PWR_FLAG
+3.3V_REF
C412
100nF
C414
100nF
Designed for: TrendBit
Designed by: Petr_Malaník
Sheet: /System/MCU/
File: MCU.kicad_sch
Project: SMPBR
Title: MCU
Board: Pump_board
Size: A4
Date: 2024-12-03
GIT hash: a985fdb
Rev: 1.0
KiCad E.D.A. 9.0.1
Id: 4/13

Input protection

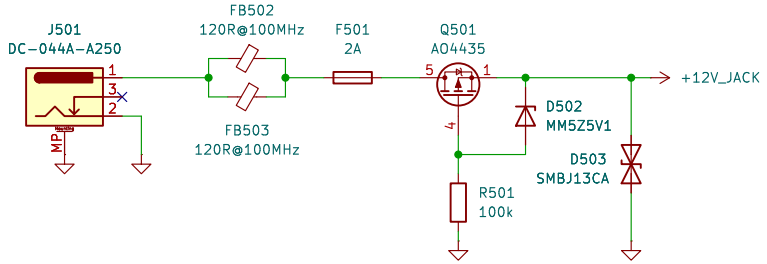

Supply switching

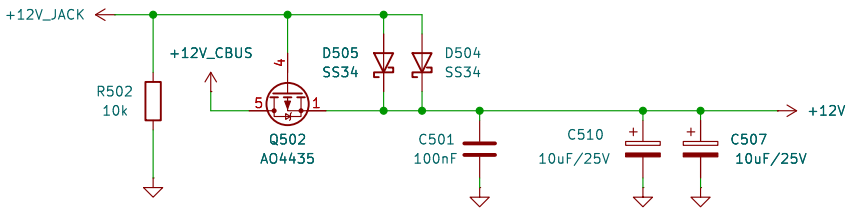

Supply – 3.3V

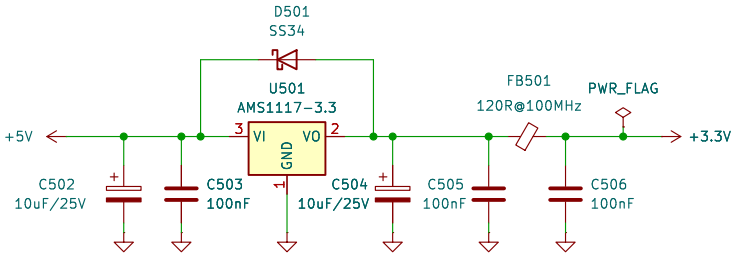

12V reading

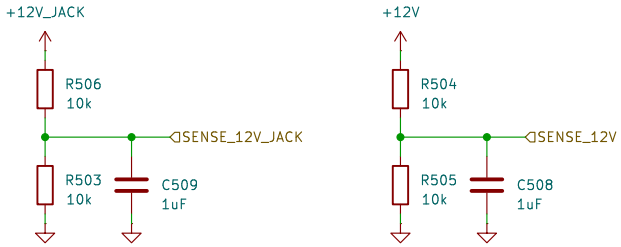

Designed for:
Designed by: Petr_Malaník

Sheet: /System/Power/
File: power.kicad_sch

Project: SMPBR

Title: Power

Board: Pump_board

Size: A4	Date:	GIT hash: a985fdb	Rev:
KiCad E.D.A. 9.0.1			Id: 5/13

USB – Update & Debug

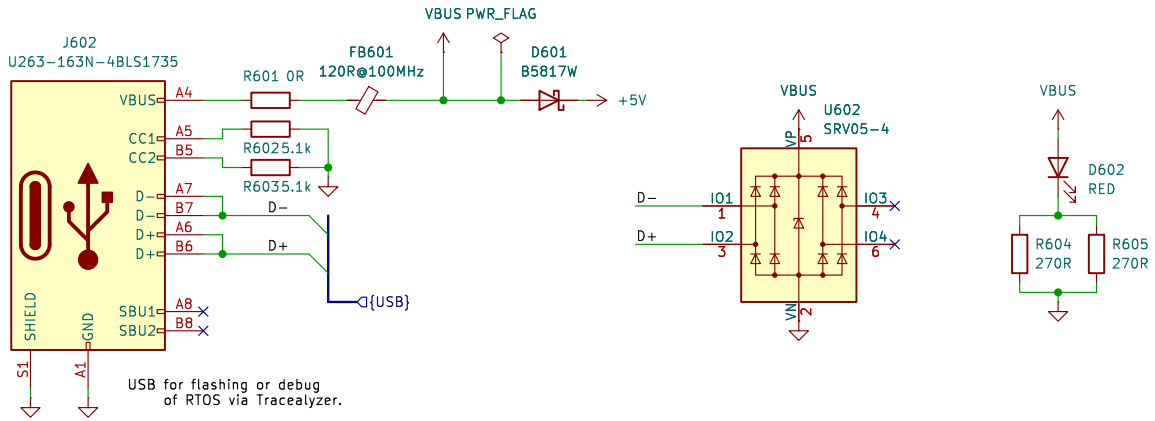

USB for flashing or debug
of RTOS via Tracealyzer.

Serial Debug

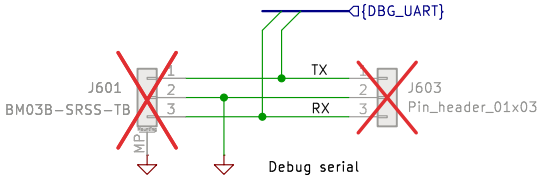

Debug serial

SWD Debug

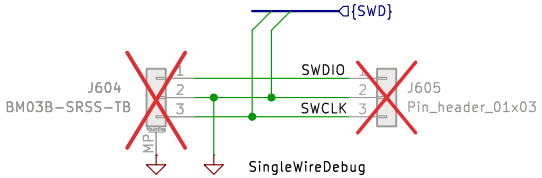

SingleWireDebug

DBG ESD Protection

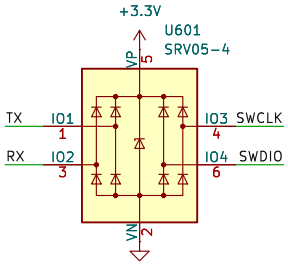

Tag-connector

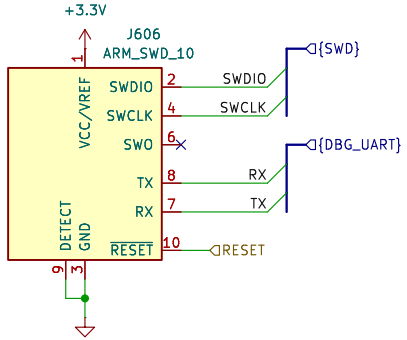

Pinout of these connectors is intended to be used with RPi debug Probe

Designed for:
Designed by: Petr_Malaník

Sheet: /System/Debug Interface/
File: debug.kicad_sch

Project: SMPBR

Title: Debug Interface

Board: Pump_board

Size: A4	Date:	GIT hash: a985fdb	Rev:
KiCad E.D.A. 9.0.1			Id: 6/13

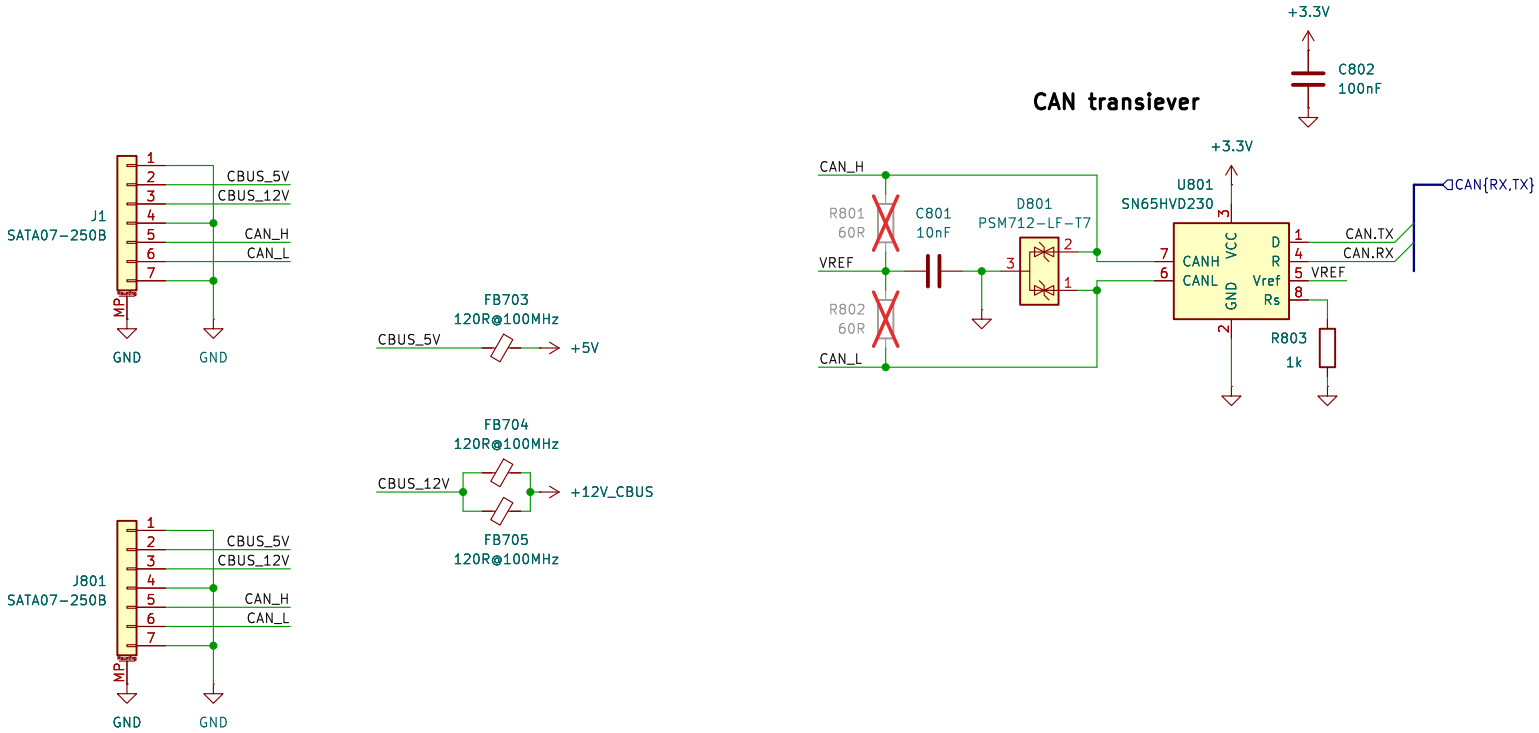

Designed for:
Designed by: Petr_Malaník

Sheet: /System/CAN/
File: can_interface.kicad_sch

Project: SMPBR

Title: CAN

Board: Pump_board

Size: A4	Date:	GIT hash: a985fdb	Rev:
KiCad E.D.A. 9.0.1			Id: 7/13

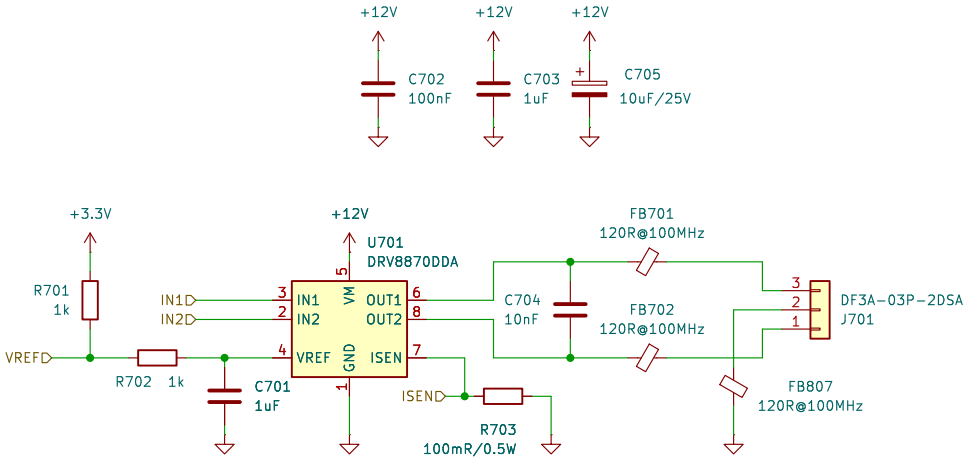

Input filter:
CTRL PWM frequency = 10 kHz
Settling time (10->90%) = ~4 ms
Peak to peak (Duty = 50%) = 0.07 V
Default max current = 3.3 A (with 0.1R Sense resistor)

$R_{SEN} = V_{REF}/(10 \times I_{TRIP})$

Current limit = 3.30 A

Designed for:
Designed by: Petr_Malaník

Sheet: /System/Peristaltic pump 1/
File: motor.kicad_sch

Project: SMPBR

Title: Peristaltic pump 1

Board: Pump_board

Size: A4	Date:	GIT hash: a985fdb	**Rev:**
KiCad E.D.A. 9.0.1			Id: 8/13

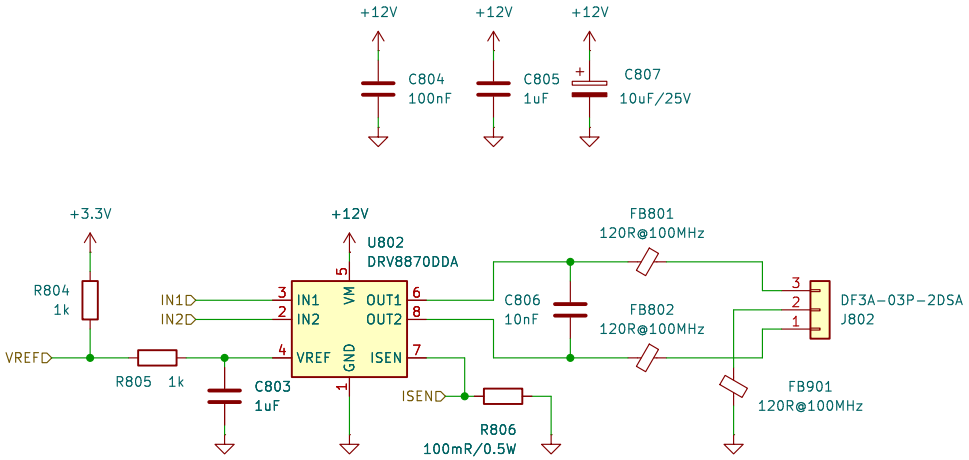

Input filter:
CTRL PWM frequency = 10 kHz
Settling time (10->90%) = ~4 ms
Peak to peak (Duty = 50%) = 0.07 V
Default max current = 3.3 A (with 0.1R Sense resistor)

$R_{SEN} = V_{REF}/(10 \times I_{TRIP})$

Current limit = 3.30 A

Designed for:
Designed by: Petr_Malaník

Sheet: /System/Peristaltic pump 2/
File: motor.kicad_sch

Project: SMPBR

Title: Peristaltic pump 2

Board: Pump_board

Size: A4	Date:	GIT hash: a985fdb	**Rev:**
KiCad E.D.A. 9.0.1			Id: 9/13

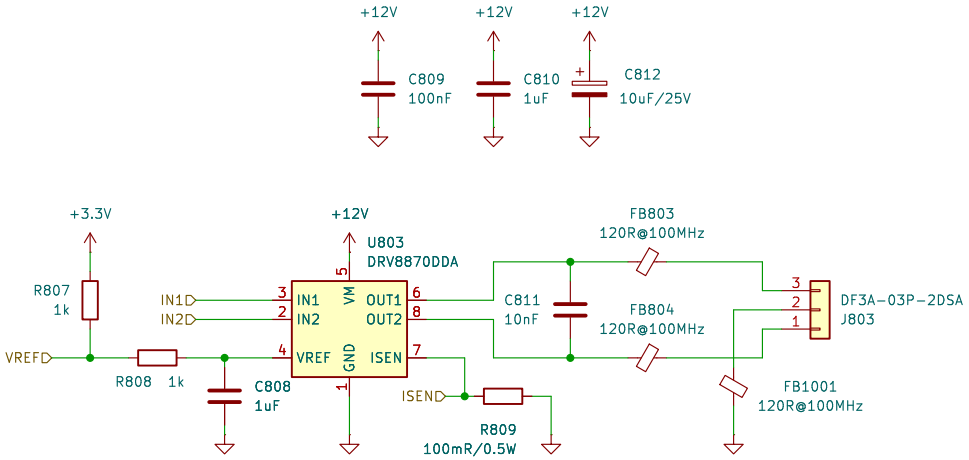

Input filter:
CTRL PWM frequency = 10 kHz
Settling time (10->90%) = ~4 ms
Peak to peak (Duty = 50%) = 0.07 V
Default max current = 3.3 A (with 0.1R Sense resistor)

$R_{SEN} = V_{REF}/(10 \times I_{TRIP})$

Current limit = 3.30 A

Designed for:
Designed by: Petr_Malaník

Sheet: /System/Peristaltic pump 3/
File: motor.kicad_sch

Project: SMPBR

Title: Peristaltic pump 3

Board: Pump_board

Size: A4	Date:	GIT hash: a985fdb	**Rev:**
KiCad E.D.A. 9.0.1			Id: 10/13

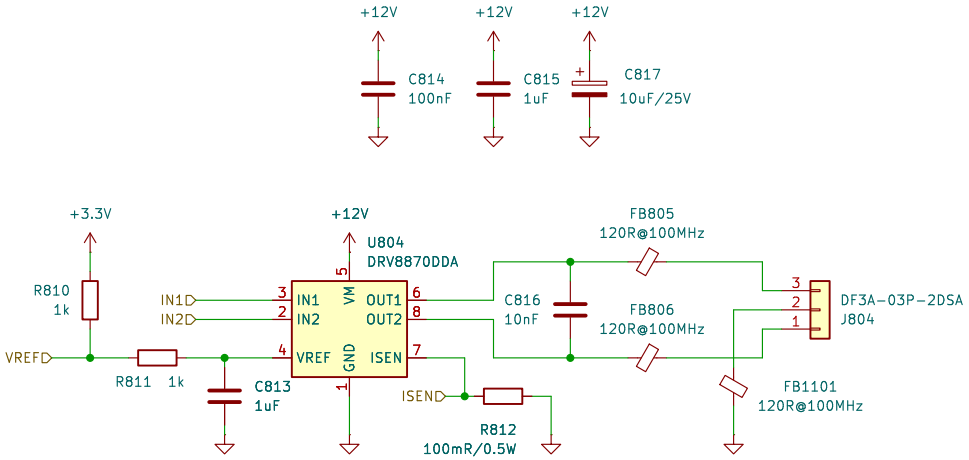

Input filter:
CTRL PWM frequency = 10 kHz
Settling time (10->90%) = ~4 ms
Peak to peak (Duty = 50%) = 0.07 V
Default max current = 3.3 A (with 0.1R Sense resistor)

$R_{SEN} = V_{REF}/(10 \times I_{TRIP})$

Current limit = 3.30 A

Designed for:
Designed by: Petr_Malaník

Sheet: /System/Peristaltic pump 4/
File: motor.kicad_sch

Project: SMPBR

Title: Peristaltic pump 4

Board: Pump_board

Size: A4	Date:	GIT hash: a985fdb	**Rev:**
KiCad E.D.A. 9.0.1			Id: 11/13

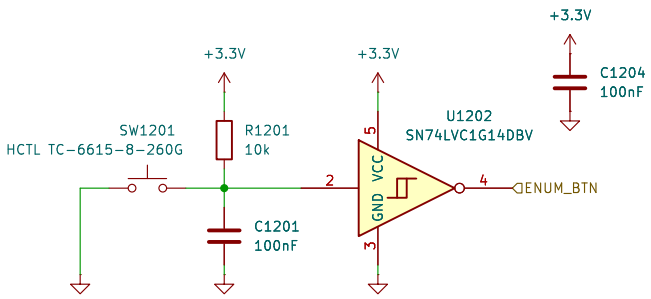

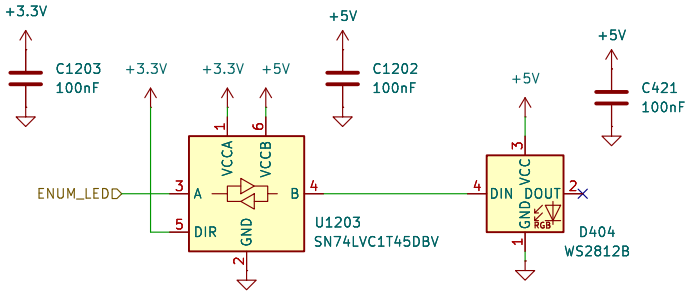

Designed for: TrendBit
Designed by: Petr_Malaník

Sheet: /System/Enumeration/
File: enumeration.kicad_sch

Project: SMPBR

Title: Enumeration

Board: Pump_board

Size: A4	Date: 2024-12-03	GIT hash: a985fdb	**Rev: 1.0**
KiCad E.D.A. 9.0.1			Id: 12/13

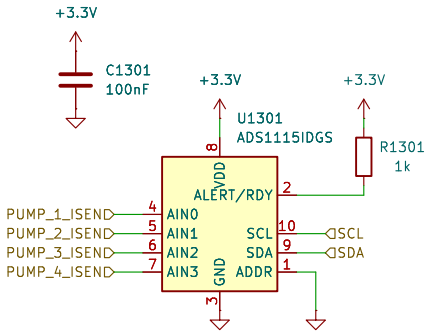

I2C address (7-bit): 0b1001000 (0x48)

Designed for: TrendBit
Designed by: Petr_Malaník

Sheet: /System/ADC/
File: adc.kicad_sch

Project: SMPBR

Title: ADC

Board: Pump_board

Size: A4	Date: 2024-12-03	GIT hash: a985fdb	**Rev:**
KiCad E.D.A. 9.0.1			Id: 13/13