Texas Instruments

Real World Signal Processing™

Audio Solutions Guide

1394 (FireWire™), Analog and Digital Amplifiers, Audio Converters, Digital Signal Processors, Power Management, USB Peripherals

1Q 2003

INSIDE ▶

Home Audio	**4**
Home Theater	4
Digital TV/Minicompo	12
Digital Radio	**15**
Eureka 147 DAB	15
HD Radio	19
Portable Audio	**22**
Professional Audio	**28**
Resources	**33**

TABLE OF CONTENTS

Home Audio

Home Theater **4**
AV/DVD Receiver 4
Highest Performance DSP Enables Lifelike Sound at Lower Costs 5
Six-Channel Digital Audio PWM Processor 6
70-W Digital Amplifier Power Stage 6
Stereo Digital Amplifier Power Stage 7
Low Cost 8-Ch PCM-/DSD-Compatible DAC 7
Advanced-Segment DAC 8
Stereo Audio ADC for DVD and DSD 8
Highest Performance Audio DAC 9
Enhanced, Multiformat Audio DAC 9
Lowest Cost Six-Channel DAC 10
Stereo 96-kHz/192-kHz, 24-bit DAC 10
One-chip IEEE 1394 Solution 11

Digital TV/Minicompo **12**
Stereo Digital Audio PWM Processor 13
Stereo Digital Audio Power Amplifier 13
Digital Audio Processors 14
Integrated USB Interface with DAC 14

Digital Radio

Eureka 147 DAB **15**
Industry's First Open, Software-Driven Receiver Design 16
2-W Stereo Filter-Free Class-D Audio Power Amp with Integrated Headphones 17
Next-Generation Audio Power Amps Provide Integrated Gain 17
DAC for Consumer Audio Applications 18

HD Radio™ **19**
First HD Radio™ Digital Baseband 20
Low Input Voltage, Output-Cap-Free 1-A LDOS 21
Ultra-Low-Noise, High-PSRR, Fast-RF LDO in SOT-23 21

Portable Audio **22**

Programmable DSP with On-Board USB 23
High-Performance Digital Media Solution 23
Low-Power Stereo Audio Codec 24
Low-Power DAC with Analog Line Inputs 24
Stereo Headphone Audio Power Amplifiers 25
Low-Voltage, Low-Power Stereo DACs 25
Industry-Leading, Low-Power USB 2.0-to-ATA Bridge Solution 26
High-Performance, 2-Port, Integrated PHY and Link Layer Chip 26
Low-Power, Stereo Audio Codecs 27
Low Input Voltage, Output-Cap-Free LDOs 27

Professional Audio **28**

Low-Distortion Microphone Preamp Replaces SSM2017 29
High-Performance Audio Volume Controls 29
World's First Digitally Controlled Microphone Preamp IC 30
High-Performance 24-Bit, 192-kHz Stereo Audio ADC 30
High-Performance 24-Bit, 192-kHz 4-Channel Audio DAC 31
World's Highest Performance Sample Rate Converter ICs 31
Digital Audio Transmitters for Professional Studio Applications 32
Digital Interface Receiver for S/PDIF & AES-3 Applications 32

Resources

Selection Guides 33
Evaluation Modules (EVMs) 40
User Guides 41
Application Notes 41

TI WORLDWIDE TECHNICAL SUPPORT

Internet

TI Semiconductor Product Information Center Home Page
support.ti.com

TI Semiconductor KnowledgeBase Home Page
support.ti.com/sc/knowledgebase

Product Information Centers

Americas

Phone	+1(972) 644-5580
Fax	+1(972) 927-6377
Internet/Email	support.ti.com/sc/pic/americas.htm

Europe, Middle East, and Africa

Phone	
Belgium (English)	+32 (0) 27 45 55 32
Finland (English)	+358 (0) 9 25173948
France	+33 (0) 1 30 70 11 64
Germany	+49 (0) 8161 80 33 11
Israel (English)	1800 949 0107
Italy	800 79 11 37
Netherlands (English)	+31 (0) 546 87 95 45
Spain	+34 902 35 40 28
Sweden (English)	+46 (0) 8587 555 22
United Kingdom	+44 (0) 1604 66 33 99
Fax	+(49) (0) 8161 80 2045
Email	epic@ti.com
Internet	support.ti.com/sc/pic/euro.htm

Japan

Fax	
International	+81-3-3344-5317
Domestic	0120-81-0036
Internet/Email	
International	support.ti.com/sc/pic/japan.htm
Domestic	www.tij.co.jp/pic

Asia

Phone	
International	+886-2-23786800
Domestic	**Toll-Free Number**
Australia	1-800-999-084
China	108-00-886-0015
Hong Kong	800-96-5941
Indonesia	001-803-8861-1006
Korea	080-551-2804
Malaysia	1-800-80-3973
New Zealand	0800-446-9341
Philippines	1-800-765-7404
Singapore	800-886-1028
Taiwan	0800-006800
Thailand	001-800-886-0010
Fax	886-2-2378-6808
Email	tiasia@ti.com
Internet	support.ti.com/sc/pic/asia.htm

070802

Important Notice: The products and services of Texas Instruments Incorporated and its subsidiaries described herein are sold subject to TI's standard terms and conditions of sale. Customers are advised to obtain the most current and complete information about TI products and services before placing orders. TI assumes no liability for applications assistance, customer's applications or product designs, software performance, or infringement of patents. The publication of information regarding any other company's products or services does not constitute TI's approval, warranty or endorsement thereof.

Trademarks in this issue: The red/black banner, SpAct, TMS320DA61x, MicroStar BGA, MicroStar Jr., Code Composer Studio, DSP/BIOS, PowerPAD, AutoComp, TMS320C54x, TMS320C55x, TMS320C5000, TMS320C6000, TMCReal Time Data Exchange and RTDX are trademarks of Texas Instruments. All trademarks are the property of their respective owners.

© Copyright 2003 Texas Instruments Incorporated

Printed in U.S.A. at The Jarvis Press on recycled paper

AUDIO SOLUTIONS

In today's marketplace for audio equipment, designers are challenged to satisfy very demanding consumers who expect high quality, multi-function audio products that are cost-competitive and feature-rich. Consumers expect the very best listening experience from any audio format, any source and from both home and mobile audio systems. This places a great deal of pressure on designers to minimize engineering tradeoffs while quickly bringing new and compelling audio products to market.

In response to the needs of audio designers, TI has assembled an impressive array of silicon, software, systems expertise and support that is focused solely on audio systems. TI offers all-digital audio components as well as digital+analog audio solutions. Programmable components with performance headroom and design flexibility give designers the ability to build audio systems with more functionality and a true, lifelike sound experience at a competitive cost.

TI is able to shorten a manufacturer's time-to-market by offering world-class systems expertise, software and support.

Please read on to find out more about TI's solutions for audio applications.

INSIDE

Home Audio	**4**
Home Theater	4
Digital TV/Minicompo	12
Digital Radio	**15**
Eureka 147 DAB	15
HD Radio	19
Portable Audio	**22**
Professional Audio	**28**
Resources	**33**

AUDIO SIGNAL CHAIN

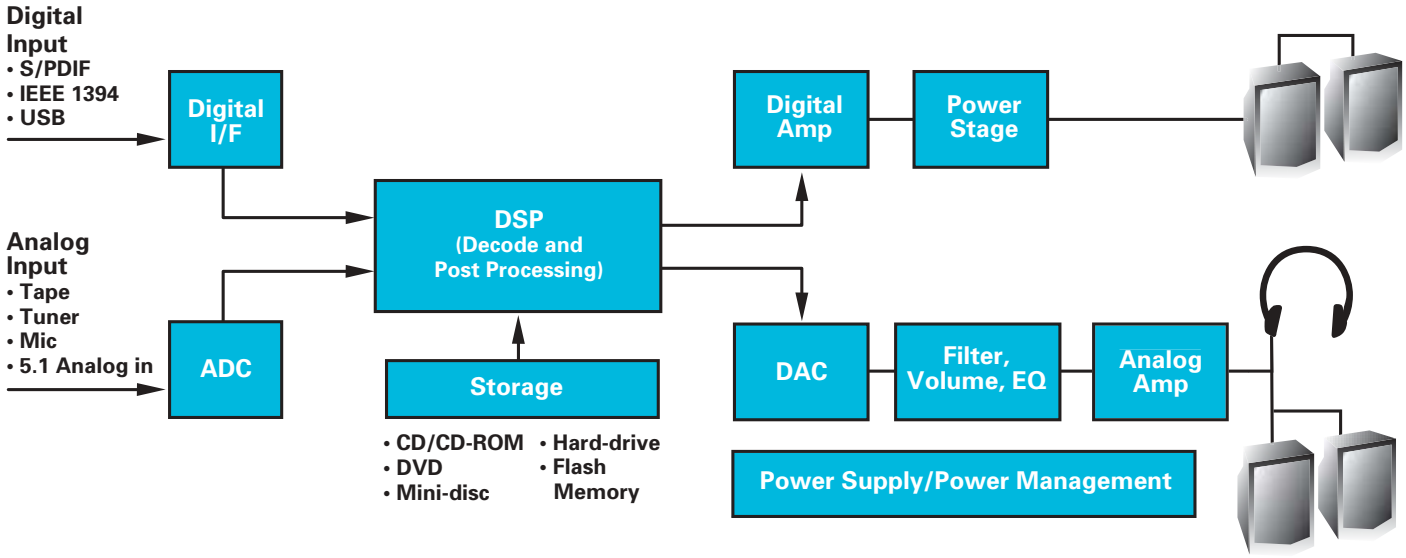

Under the surface, all modern audio systems are the same — even 21st century systems.

TO KNOW MORE ▶

For detailed info about Home Theater components featured in this issue:

High-performance DSP	5
PWM processor	6
Digital amplifier power stage	6
Digital amplifier power stage	7
8-channel DAC	7
Advanced segment DAC	8
Stereo ADC	8
Highest-performance audio DAC	9
Stereo DAC	9
6-channel DAC	10
Stereo, 24-bit DAC	10
1394 integrated devices	11
Ultra-low-noise LDOs	21
1-A LDOs	21
Output-cap-free LDOs	27

HOME THEATER PRODUCTS — AV/DVD RECEIVER

New digital audio formats like DVD-Audio and SACD present system designs with several engineering dilemmas concerning digital connectivity, content protection, compatibility with new decoding standards and the need for higher data rates throughout the entire audio chain.

Both formats have a great deal to offer consumers in terms of higher fidelity — from increased sampling rates and an unprecedented degree of immersion in the audio experience — because of their multichannel capabilities. To take full advantage of these consumer benefits, the audio system designer must support higher data rates between the source and the AV receiver. The problem is that the traditional SPDIF connection can support only limited data rates and it offers little or no security protection for creative content. Settling for a compromise solution, such as a multi-channel analog connection, or down-sampling and/or down-mixing on the digital output, means sacrificing the quality of the high-resolution, multichannel digital content.

FireWire™, or IEEE 1394, offers a high-speed serial connection solution. Specifically, TI's TSB43CA43A (iceLynx-micro™) 1394 host controller offers a compact and highly integrated solution that ensures the security of streaming digital audio content. The highest quality DVD-Audio data rate of 192 kHz can be sent across a single 1394 cable connected to an AV receiver. This type of solution offers consumers high quality digital audio and a system that's easy to set up.

Audio system designers also must address the higher sampling speeds of the DVD-Audio and SACD formats. Often, the demands of these formats can absorb all or most

Continued on the next page

BLOCK DIAGRAM OF TYPICAL AV RECEIVER

TheTMS320DA610 Aureus™ audio DSP from TI has 3X the processing power of competing DSPs. The digital amplifier enables high power and high quality amplification in compact spaces. The DACs, ADCs and digital interface products of Burr-Brown from TI complete the audio signal chain.

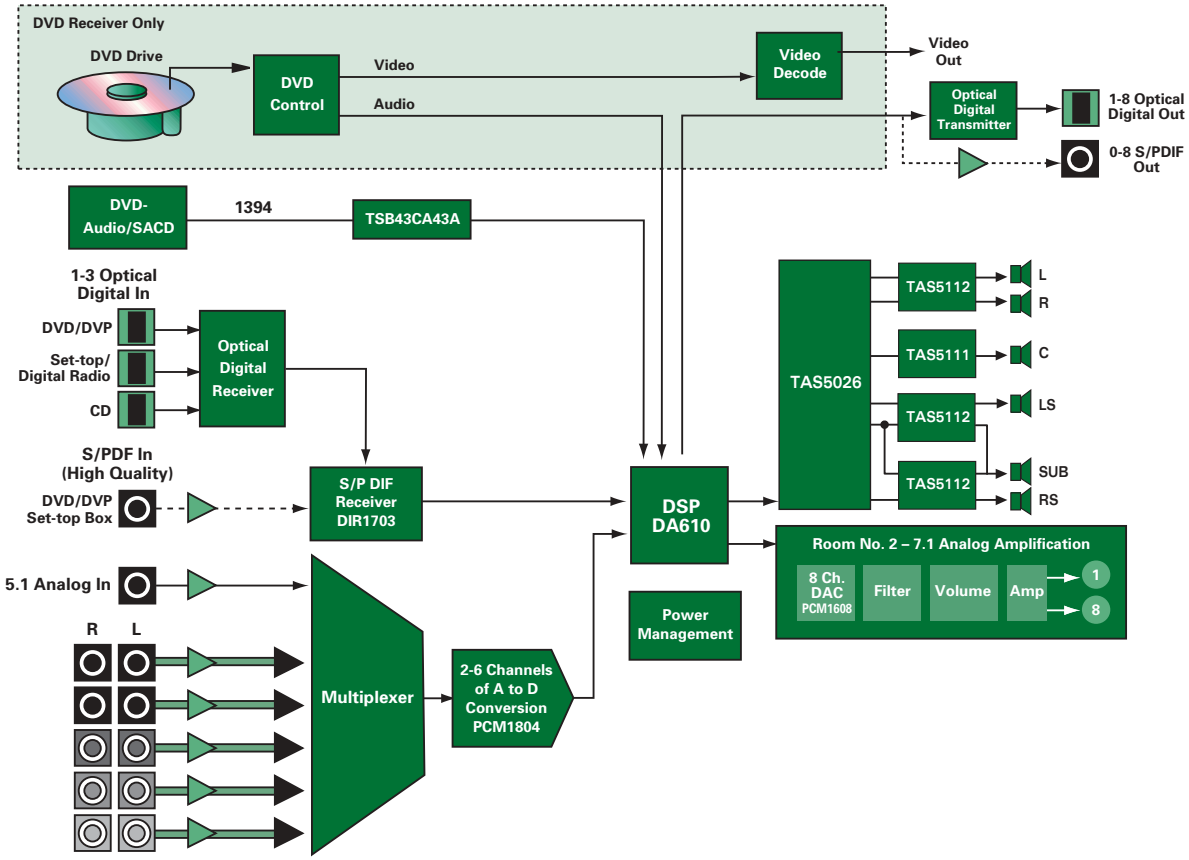

Continued from the previous page

of the processing capabilities of the audio system, leaving little performance headroom for other important tasks like proprietary post-processing algorithms. TI's TMS320DA610 Aureus™ audio DSP can decode the most advanced audio standards and still have processing headroom left over for other functions. The DA610 is capable of clock speeds of 225 MHz and 32- or 64-bit processing. As with all of TI's digital audio DSPs, the DA610 can be interfaced easily with other TI audio components, such as connectivity and digital amplification solutions.

Innovative digital amplifiers also are needed to ensure the kind of functionality and form factor consumers demand in today's competitive audio marketplace. For example, high efficiency digital amplifiers are practically a requirement for standard-size DVD receiver with a tuner, a disk changer, 350 W or more of power, and six, seven or eight channels. TI's newest TAS5111 and TAS5112 high-efficiency PurePath Digital™ amplifier power stages meet the designer's needs for increased functionality and power without increasing chassis size. TI's digital amplifiers support all of the popular standard sampling rates, including DVD-Audio's rate of 192 kHz. TI's digital amplifier has the highest audio performance available in the digital amp market today and in review after review has been given top marks for its quality and natural sound.

TMS320DA61x Floating-Point DSP Block Diagram

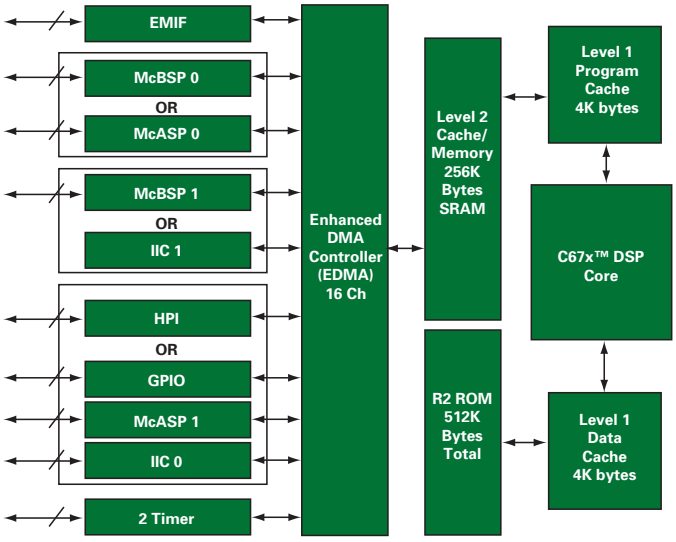

HIGHEST PERFORMANCE DSP ENABLES LIFELIKE SOUND AT LOWER COSTS

TMS320DA61x

For more information, visit:
www.ti.com/sc/haudio

Unparalleled performance and integrated peripherals of the TMS320DA61x DSP generation for audio provides higher quality, more features, faster time-to-market, and lower overall costs.

Key Features

- 1500 MFLOPS/2000 MIPS enable integration of more features (i.e., multiple digital zones of audio decode, speaker virtualization, etc.)
- Lifelike sound recreation with up to 64-bit words
- Open, scalable software solution enables fast integration of changing industry-standard algorithms with customer's own IP
- Easy-to-use development tools speed time-to-market
- Performance of the TMS320DA610 reduces the DSP and microcontroller count in audio systems, reducing costs
- Two multichannel audio serial ports (McASP)
- Two I^2C (inter IC control) interfaces

Applications

- Home entertainment: AV receivers, DVD receivers, home theater-in-a-box and mini/micro component systems
- Professional audio equipment: Digital mixing consoles, digital audio recorders, broadcast studio equipment, musical instruments, and surround-sound encoders/decoders
- Automotive DVD/CD receivers

SIX-CHANNEL DIGITAL AUDIO PWM PROCESSOR

TAS5026

Get samples, datasheets, app reports and EVMs at:
www.ti.com/sc/device/tas5026

The TAS5026 is a six-channel, digital audio PWM processor designed for DVD and AV receivers. The TAS5026 provides independent volume control for each channel with a patented soft-volume algorithm.

Key Features

- PWM processor
- Independent six-chanel gain
  - +24- to –114 dB
  - 0.5 dB resolution
  - Auto mute
  - Soft volume/mute
- High audio performance
- 96-dB SNR
- 0.1% THD+N (typ)
- 32-kHz to 192-kHz sampling rates supported
- 16-, 20-, or 24-bit operation
- Low EMI design passes regulatory requirements
- Click and pop free
- AM interference solution

TAS5026/36 Block Diagram

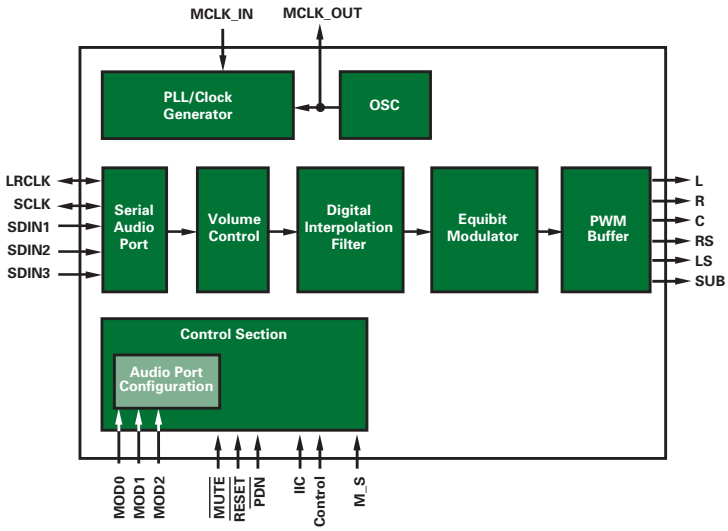

Applications

- DVD receivers
- AV receivers
- Mini-/micro components
- Home networking
- Digital radio

70-W DIGITAL AMPLIFIER POWER STAGE

TAS5111

Get samples, datasheets, app reports and EVMs at:
www.ti.com/sc/device/TAS5111

PREVIEW

The TAS5111 is TI's latest power stage, driving a continuous 70-W RMS into 4 Ω. Total system performance will be greater than 100 dB at less than 0.1% THD+N. With its industry leading efficiency, the TAS5111 is the best choice for high power amplification in todays DVD receivers and AV receivers.

Key Features

- All-digital 70-W into 4 Ω
- >90% efficiency
- 32 -192 kHz sampling rates supported
- 100 db SNR, 0.1% THD+N
- Fault detection and protection
  - Over-current
  - Over-temperature
  - Under-voltage
- Low EMI design passes regulatory requirements
- AM interference solution

Applications

- DVD receivers
- AV receivers
- Mini/micro component systems

TAS5111 Block Diagram

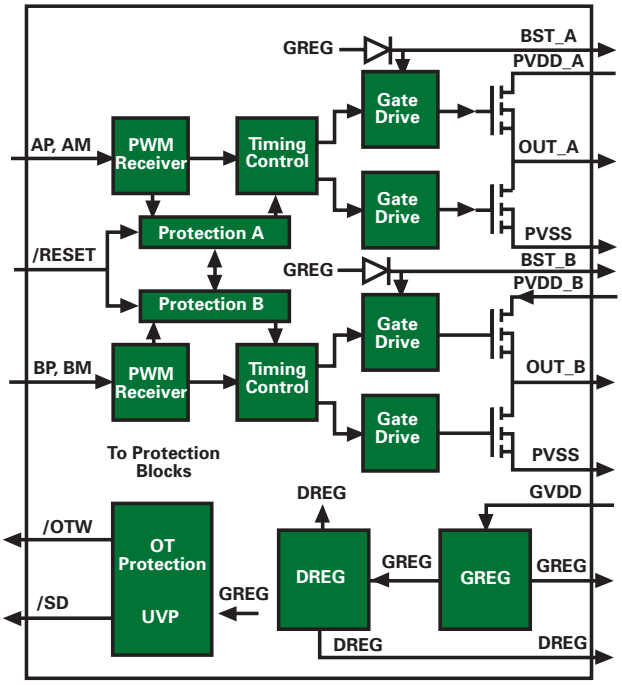

TAS5112 Block Diagram

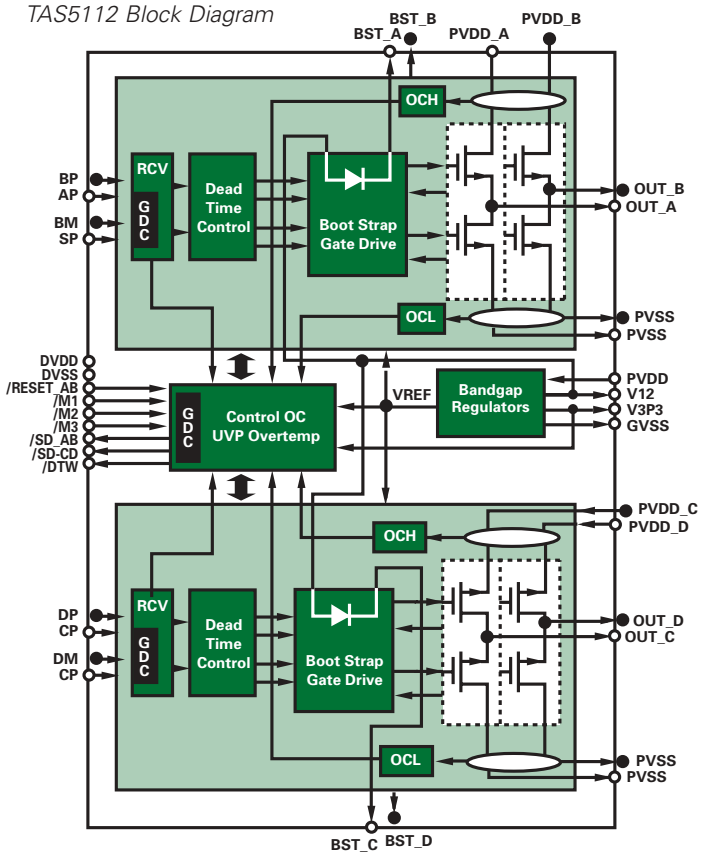

STEREO DIGITAL AMPLIFIER POWER STAGE

TAS5112

Get samples, datasheets, app reports and EVMs at:
www.ti.com/sc/device/tas5112

PREVIEW

The TAS5112 is a 50-W stereo digital amplifier power stage. The TAS5112 can supply 50-W continuous RMS power into 6 Ω at less than 0.1% distortion.

Key Features

- Two-channel all-digital 50-W into 6 Ω
- 90% efficiency
- 32-kHz to 192-kHz sampling rates supported
- 100 dB SNR, 0.1% THD+N
- Fault detection and protection
  - Over-current
  - Over-temperature
  - Under-voltage
- Low EMI design passes regulatory requirements
- AM interference solution

Applications

- DVD receivers
- AV receivers
- Mini-/micro-components
- Home networking
- Digital radio

DSD1608 Block Diagram

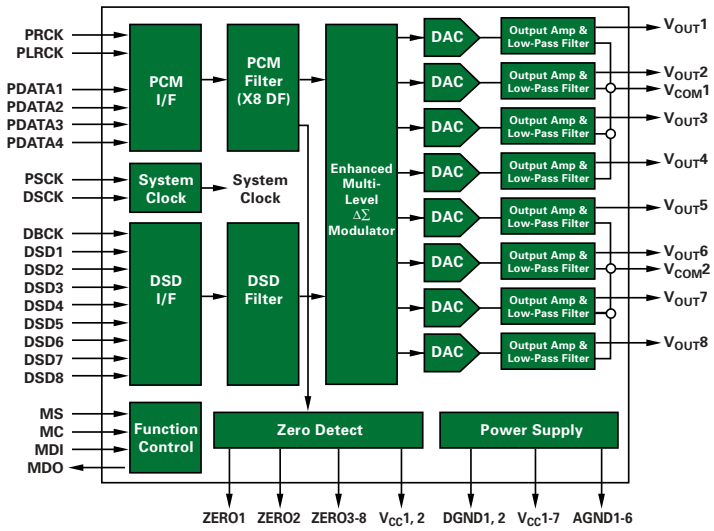

Applications

- Universal AV players
- Super audio CD players
- Car audio systems
- Other applications requiring 24-bit audio

LOW COST 8-CH PCM-/DSD-COMPATIBLE DAC

DSD1608

For datasheets, samples and app reports visit
www.ti.com/sc/device/dsd1608

The DSD1608 is a low-cost, 8-channel PCM-/DSD-compatible DAC. It is the first mutlichannel audio DAC to support the new TDMCA mode, which allows communication both of eight channels of audio data and also all control commands over a single interface. This conserves DSP port resources, simplifies board design and shortens prototyping time.

Key Features

- Data word length:16/18/20/24 bits for PCM, direct stream for DSD
- Sampling rate (f_S):
  - Up to 192 kHz for PCM format
  - 2.8224 MHz (= 64 X 44.1 kHz) for DSD format
- 8-channel, single-ended voltage output
- System clock:
  - 128/192/256/384/512/768 f_S for PCM,
  - 256/384/512/768 f_S for DSD
- Analog performance (at V_{CC} = 5 V, PCM/DSD mode)
  - DYR: 105 dB, SNR: 105 dB, THD+N: 0.002%
  - Full-scale output: 4.0 V_{PP}
- 8X oversampling digital filter included (PCM format only)
- Packaging: 52-lead TQFP

ADVANCED-SEGMENT DAC

PCM1738

Get samples, datasheets, app reports and EVMs at:
www.ti.com/sc/device/pcm1738

The PCM1738 is a high-performance DAC utilizing a newly developed advanced-segment DAC architecture to achieve excellent dynamic performance and improved tolerance to clock jitter. The PCM1738 has two optional modes of operation: an external digital-filter mode, and a DSD decoder interface for SACD playback applications.

Key Features

- 24-bit resolution
- Sampling rate up to 192 kHz
- Excellent analog performance
- THD+N: 0.0004%
- DYR/SNR: 117 dB
- Analog out: Differential current output, ±2.5 mA
- 8X oversampling digital filter up to 192 kHz
- System clock: 128/192/256/384/512/768 f_S auto detect
- DF through mode available
- DSD mode available
- Dual power supply: 3.3 V for digital, 5 V for analog
- Packaging: 28-pin SSOP

PCM1738 Block Diagram

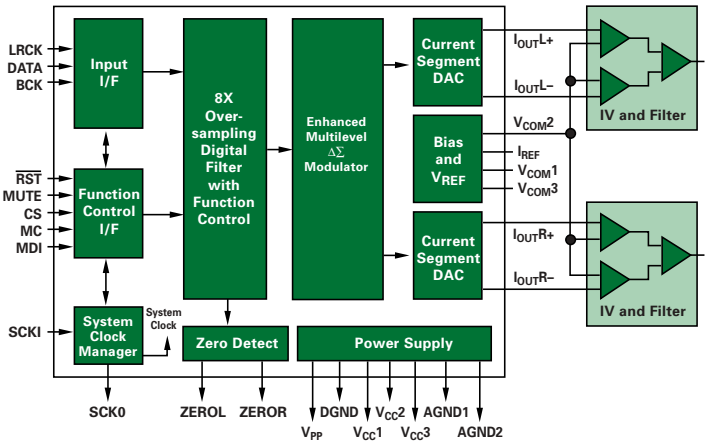

Applications

- AV receivers
- Super Audio CD players
- DVD players
- DVD receivers

STEREO AUDIO ADC FOR DVD AND DSD

PCM1804

Get samples, datasheets and app reports at:
www.ti.com/sc/device/pcm1804

The PCM1804 is a two-channel audio ADC that offers a high level of analog performance at a moderate price. It is the industry's first monolithic ADC with native single-bit DSD output capability.

Key Features

- Power dissipation 225 mW (single rate, f_S = 48 kHz)
- 24-bit PCM resolution
- Native 1-bit 64 f_S DSD mode
- All functions set by pins, no system controller required
- Analog performance:
  - DYR: 112 dB (typ); THD+N: 0.0008% (typ)
  - Fully differential analog input: 5 V_{PP} (typ)
- Linear phase decimation filter:
  - Stopband attenuation: -100 dB
  - Passband ripple: ±0.005 dB
- Sampling frequency: 32 kHz to 192 kHz
- PCM data format: Standard, I^2S and left-justified, in master or slave mode
- Peak detection function
- High-pass filter (f_S/48000), can be bypassed
- System clock: 128 f_S, 192 fs, 256 f_S, 384 f_S, 512 fs or 768 f_S
- +5-V Analog power supply, +3.3-V digital supply
- Packaging: 28-lead SSOP

PCM1804 Block Diagram

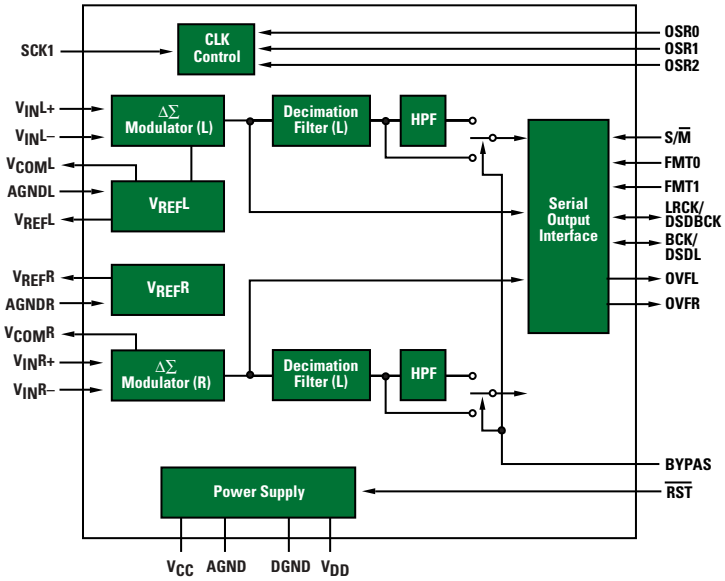

Applications

- Integrated AV receivers
- High quality DVD, MD and CD-RW recorders
- Musical instruments
- Digital audio workstations

PCM1792 Block Diagram

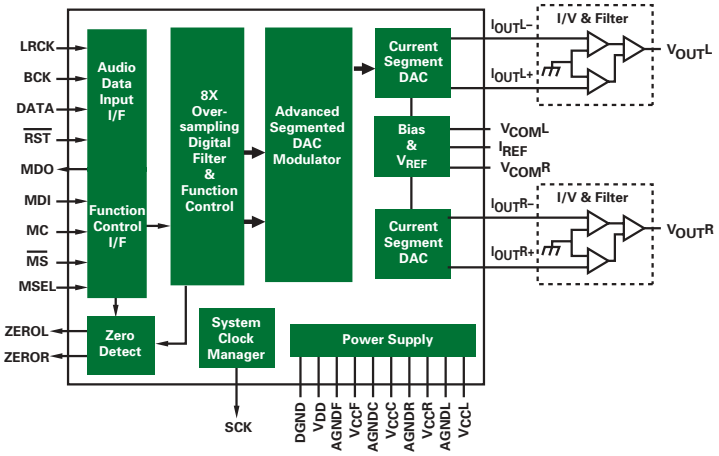

Applications
- AV receivers
- SACD player
- DVD audio players
- HDTV receivers
- Car audio systems
- Digita multitrack recorders
- Other applications requiring 24-bit audio

HIGHEST PERFORMANCE AUDIO DAC IN THE INDUSTRY

PCM1792

Get datasheet at www.ti.com/sc/device/pcm1792

PREVIEW The PCM1792 utilizes TI's newly developed Advanced Segment DAC architecture to achieve excellent dynamic performance and improved tolerance to clock jitter. The PCM1792 provides balanced current outputs, allowing the user to optimize analog performance externally.

Key Features
- 24-bit resolution
- Analog performance:
  - Dynamic range: 126 dB (typ)
  - THD+N: 0.0003% (typ)
  - Full-scale output: 2 V_{rms} (at post amp)
- 8x oversampling digital filter:
  - Stopband attenuation: -130 dB
  - Passband ripple: ±0.00001 dB
- Sampling frequency: 10 kHz to 200 kHz
- System clock: 128, 192, 256, 384, 512, or 768f_S with auto detect
- Accepts 16-, 20-, and 24-Bit audio data
- PCM data formats: standard, I^2S, and left-justified
- DSD format interface available
- Optional interface to external digital filter or DSP available
- TDMCA or serial port (SPI/I^2C)

DSD1702 Block Diagram

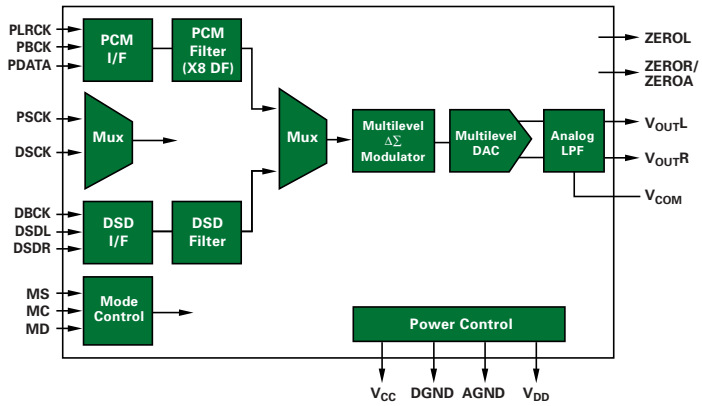

Applications
- Universal AV players
- Super audio CD players
- Car audio systems
- Other applications requiring 24-bit audio

ENHANCED MULTIFORMAT AUDIO DAC

DSD1702

For datasheets, samples or app reports visit www.ti.com/sc/device/dsd1702

The DSD1702 is a CMOS, monolithic, stereo DAC supports both PCM audio data format and direct stream digital (DSD) audio data format.

Key Features
- Accepts 16-, 18-, 20- and 24-bit audio data for PCM format
- Accepts direct stream digital (1 bit)
- Analog performance (V_{CC} = 5 V):
  - DYR: 106 dB (typ), SNR: 106 dB (typ), THD+N: 0.0015% (typ)
  - Fullscale output: 3.1 V_{PP} (typ)
- Includes 8X oversampling digital filter for PCM format:
  - Stopband attenuation: 60 dB
  - Passband ripple: ±0.02 dB
- Including digital DSD filter for DSD format:
  - Passband choices: 50 kHz, 70 kHz or 60 kHz at 3 dB
- Sampling frequency:
  - PCM mode: 10 kHz to 200 kHz
  - DSD mode: 64 X 44.1 kHz
- System clock: 128 f_S 192 f_S, 256 f_S, 384 f_S, 512fs f_S, 768 f_S
- Data formats: Standard, I^2S, and left-justified for PCM direct stream digital
- Dual supply operation: 5-V analog, 3.3-V digital
- 5-V tolerant digital inputs
- Packaging: Small 20-lead QSOP

LOWEST COST SIX-CHANNEL DAC

PCM1606

Get samples, datasheets and app reports at:
www.ti.com/sc/device/pcm1606

The PCM1606 is the world's smallest-package and lowest-cost 24-bit, 192-kHz, six-channel, delta-sigma DAC.

Key Features

- 24-bit resolution
- Analog performance:
  - DNR: 103 dB (typ); SNR: 103 dB (typ); THD+N: 0.004% (typ)
  - Full-scale output: 3.1 V_{P-P} (typ)
- 8X Oversampling interpolation filter:
  - Stopband attenuation: -55 dB
  - Passband ripple: ±0.03 dB
- Sampling frequency: 5 kHz to 200 kHz (ch 1, 2); 5 kHz to 100 kHz (ch 3, 4, 5, 6)
- Accepts 16-bit and 24-bit audio data
- Data formats: Standard, I^2S, and left-justified, TDM
- System clock: 128 f_S, 192 f_S, 256 f_S, 384 f_S, 512 f_S or 768 f_S
- Digital de-emphasis for 32 kHz, 44.1 kHz, 48 kHz
- Power supply: 5-V single supply
- Packaging: 20-lead SSOP

PCM1606 Block Diagram

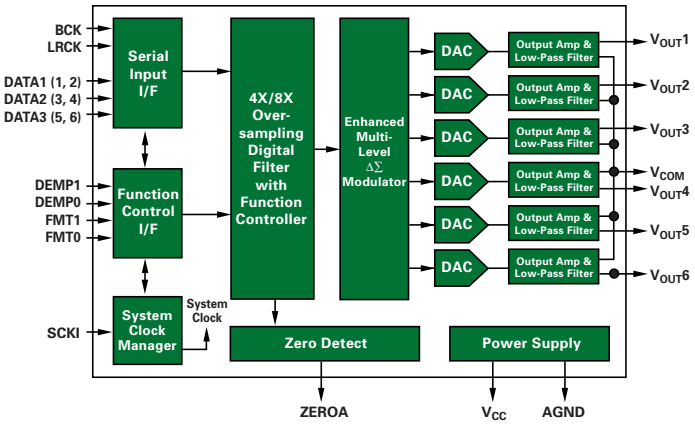

Applications

- Integrated AV receivers
- DVD movie and audio players
- HDTV receivers
- Car audio systems
- DVD add-on cards for high-end PCs
- Digital audio workstations
- Other multichannel audio systems

STEREO 96-kHz/192-kHz, 24-BIT DAC

PCM1742/48

Get samples, datasheets, app reports and EVMs at:
www.ti.com/sc/device/pcm1742

The PCM1742 is a CMOS, monolithic, integrated circuit that includes stereo DACs and support circuitry in a small SSOP-16 package.

Key Features

- Low-cost stereo 96-kHz/192-kHz, 24-bit DAC
  - PCM1748E and PCM1748KE: 96 kHz
  - PCM1742E and PCM1742KE: 192 kHz
- Analog performances (at V_{CC} = 5 V):
  - DYR: 100 dB (E)/106 dB (KE)
  - THD+N: 0.003% (E)/ 0.002% (KE)
- 8X oversampling digital filter
- 8X up to 96 kHz
- Stopband attenuation: -55 dB
- Sharp roll-off/slow roll-off selectable
- System clock 256/384/512/768 f_S auto detect
- Multifunctions
- Packaging: 16-lead SSOP

PCM174x Block Diagram

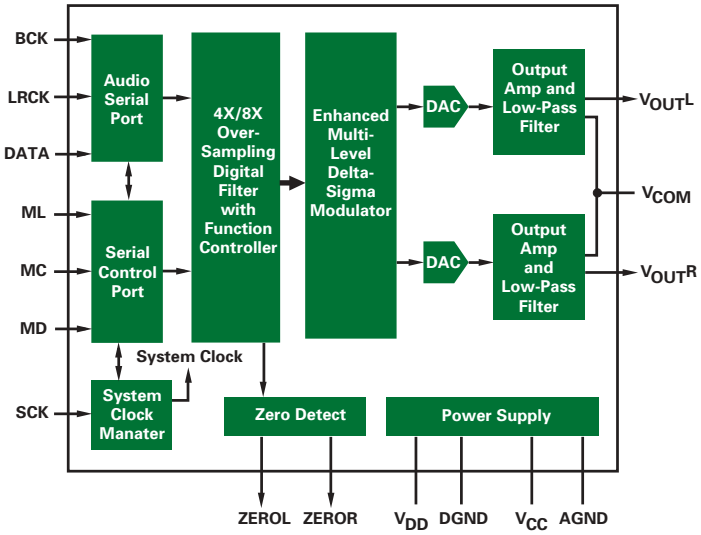

Applications

- AV receivers
- Home theater-in-a-box
- Automotive audio applications
- Personal audio applications

TSB43CA43A Block Diagram

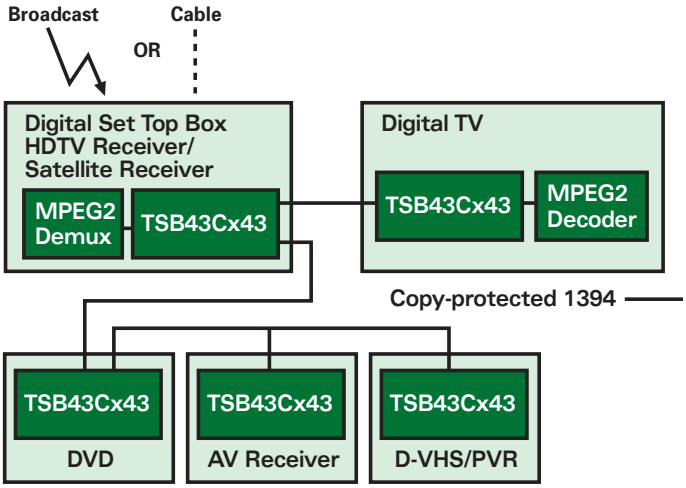

SECOND-GENERATION, ONE-CHIP IEEE 1394A SOLUTION

TSB43CA43A, TSB43CB43A

Get samples, datasheets, app reports and EVMs at:
www.ti.com/sc/device/TSB43CA43A

The TSB43CA43A is a second-generation, one-chip IEEE 1394a solution with audio support to enable content-protected (5C) streaming audio between a DVD-Audio/SACD player and an AV receiver.

Key Features

- Integrated 3-port 400-Mbps 1394a PHY
- DTCP content protection enabled with two 5C ciphers and hardware AKE acceleration
- Support for IEC61883 including MPEG2, DirecTV (DSS), DV and audio (A&M)
- Integrated programmable ARM processor with 256K bytes of internal program memory
- Dual high-speed data interfaces and 16K FIFO
- Audio support (IEC61883-6 formatting)
- Audio formats supported
  - IEC 60958 / IEC 61937
  - Multibit linear audio (raw audio and DVD audio)
  - SACD
- Audio interfaces supported
  - SPDIF
  - I^2S
  - MLPCM Interface
- Low-power modes
- Packaging: 176-pin BGA (TSB43CA43A), 176-pin QFP (TSB43CB43A)

Applications

- DVD-audio to AVR (content protection for >48-kHz data)
- Control over 1394: AVR input selection, volume control, etc.
- Multiroom audio: PCM audio output to remote receiver
- HDTV or STB to AVR: Compressed 5.1 Dolby digital from HDTV/SDTV program stream

TO KNOW MORE ►

For detailed information about Digital TV/Minicompo components featured in this issue:

Stereo digital audio power amp	13
Digital audio PWM processor	13
USB-compliant DAC	14
Digital audio processors	14
1-A LDOs	21
Ultra-low-noise LDOs	21
Output-cap-free LDOs	27

DIGITAL TV/MINICOMPO

TI is one of the few companies who can supply the broad range of products needed in today's mini-component and digital TV systems. From DACs and ADCs to advanced processing and digital amplification, TI has a solution available.

Digital TV and multichannel mini-component systems with 15 or 30 (or more) watts per channel require a highly efficient and space-saving amplifier solution. TI's TAS5101 is the industry's smallest all-digital amplifier and can drive two channels at 15 W with a very small footprint and PCB heatsinking. TI has a broad line of PWM processors from the two-channel TAS5001 to the six-channel TAS5026.

Both digital TV and mini-component systems require a cost-effective digital audio processing solution to provide volume, treble, bass and sound effects. TI has released the TAS3103 to provide this solution at a very cost-effective price point. The TAS3103 can mux up to eight channels input and digitally process three channels. The TAS3103 can also perform sound effects such as TruSurround XT, BBE, QSound and other audio algorithms popular in the DTV and mini-compo market. With the third channel a single TAS3103 can either perform bass management on two channels or process a discrete channel. Two TAS3103s can gluelessly provide a complete post processing solution for 5.1 channel systems including bass management, delay, loudness, compression and limiting.

USB interface is becoming popular on mini audio components and allows seamless plug-and-play interfacing of music signals. The PCM 2702 is already established as the highest-quality, self-powered USB audio DAC in this application. The new PCM290x codec family allows both the replay of PC music and the recording of sources attached to the mini component onto the PC.

DIGITAL MINI-/MICRO-COMPONENT SYSTEM BLOCK DIAGRAM

The basic block diagram of any digital mini-/micro-component system will have not only the traditional analog sources, but also many digital sources. Using digital audio processing and digital amplification enables new product features and smaller, lighter solutions.

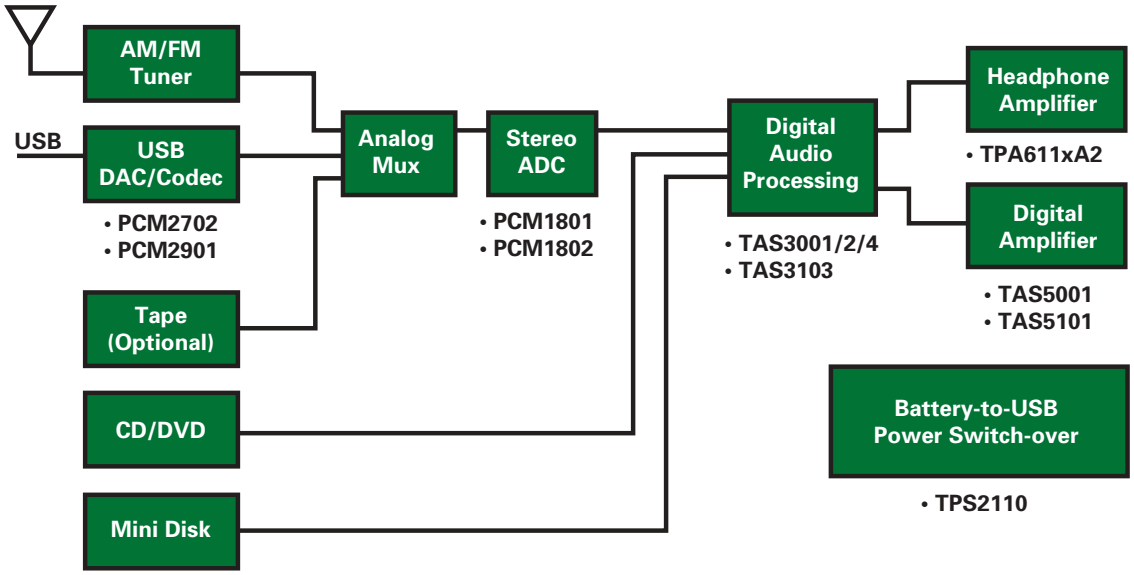

TAS50xx Block Diagram

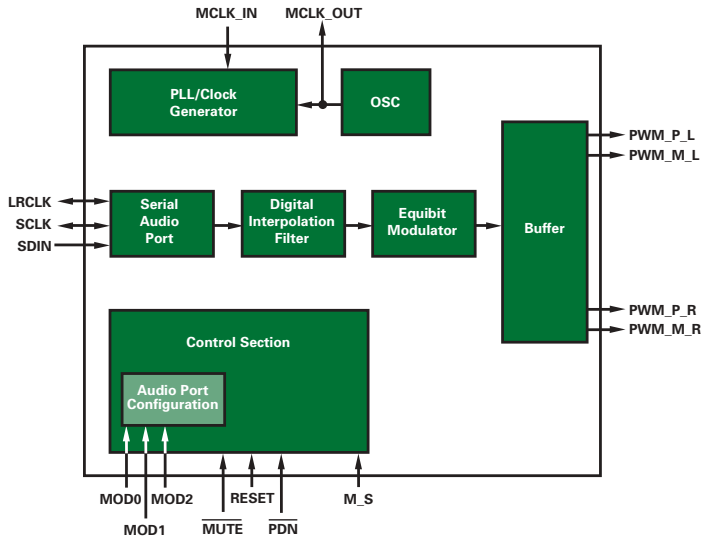

STEREO DIGITAL AUDIO PWM PROCESSOR

TAS5001

Get datasheets and app reports at:
www.ti.com/sc/device/tas5001

The TAS5001 is a stereo Digital Audio PWM Processor featuring 24-bit/96-kHz performance. When combined with one of TI's digital amplifier power stages, it is an all-digital high power amplifier solution.

Key Features

- High audio performance
- 96 dB SNR
- 0.06% THD+N (typ)
- Sampling rates: 32 kHz to 96 kHz
- 16-, 20- or 24-bit operation
- Low EMI design passes regulatory requirements
- Click and pop reduction

Applications

- Mini-/micro-component systems
- AV receivers
- DVD receivers

TAS51xx Block Diagram

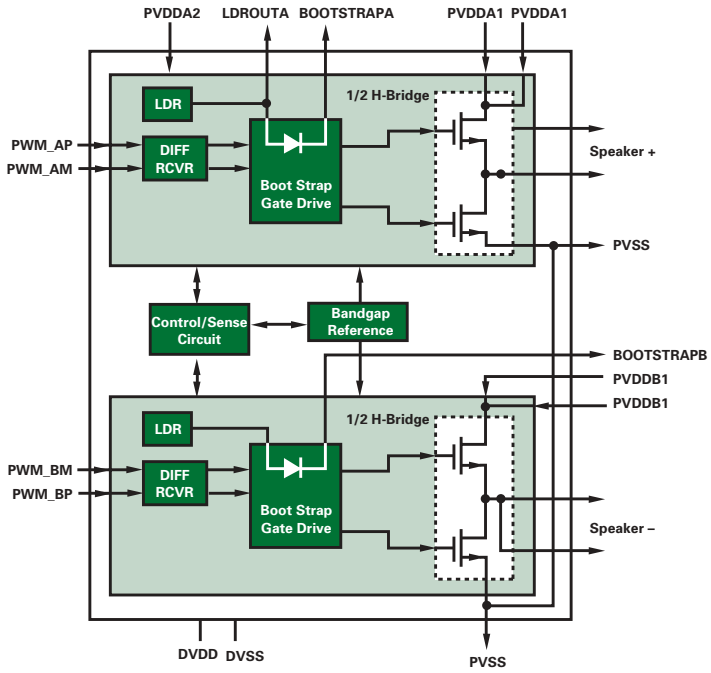

STEREO DIGITAL AUDIO POWER AMPLIFIER

TAS5101

Get datasheets and app reports at:
www.ti.com/sc/device/tas5101

The TAS5101 is a stereo digital amplifier power stage capable of delivering 15 W per channel at 0.1% THD+N. This device is used in conjunction with one of TI's Digital Audio PWM processors.

Key Features

- Stereo 15-W RMS into 4 Ω (0.1% THD+N)
- Up to 90% efficiency
- Sampling rates: 32 kHz to 192 kHz
- Surface-mount products eliminate manual heatsink assembly
- PCB heatsinking
- Fault detection and protection
  - Over-current
  - Over-temperature
- Low EMI design passes regulatory requirements
- 20 W at 10% THD+N

Applications

- Mini-/micro-component systems
- AV receivers
- DVD receivers

DIGITAL AUDIO PROCESSORS

TAS3103

Get datasheets and app reports at:
www.ti.com/sc/device/tas3103

The TAS3103 is a cost-effective, three-channel, 48-bit digital audio processor with a 76-bit accumulator providing 540-MIPS of audio processing. It supports sample rates from 8 kHz to 96 kHz and two ICs can be used for a 6-channel application glue-lessly.

Key Features

- 8 channels input
- 3 channel independently processed
- Input/output cross-bar mixer
  - Channel mapping
- 3D effects block
  - BBE, Qsound, SRS, etc.
- Full bass management
- High-performance soft volume, treble/bass
- High-performance compression/limiting
- 42 ms delay
- 12 bi-quads per channel

TAS3103 Block Diagram

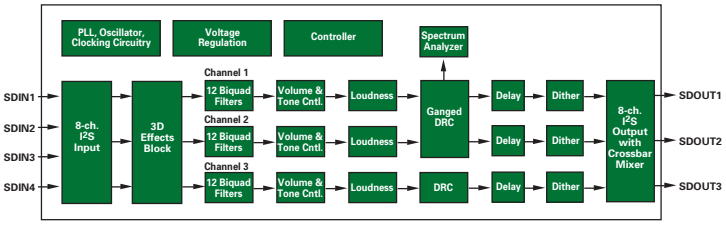

Applications

- Mini-/micro-component systems
- Home theater post-decode processing
- Automotive headunits/amps

INTEGRATED USB INTERFACE WITH DAC

PCM2702

Get samples, datasheets, app reports and EVMs at:
www.ti.com/sc/device/pcm2702

The PCM2702 is a single-chip DAC offering two D/A output channels and an integrated USB 1.0-compliant interface controller.

Key Features

- Provides the highest audio performance with 100-dB signal-to-noise ratio and 0.002% total harmonic distortion
- Supports 32-kHz, 44.1-kHz, and 48-kHz playback rates in a wide range of common playback frequencies
- Generates all necessary clocks from a single 12-MHz external crystal on the chip
- Patent-pending SpAct™ Technology synchronizes the internal audio clocks to the USB audio data received, which maintains low clock jitter
- Packaging: 28-pin SSOP does not require programming

Applications

- USB headphone sets
- USB speakers

PCM2702 Block Diagram

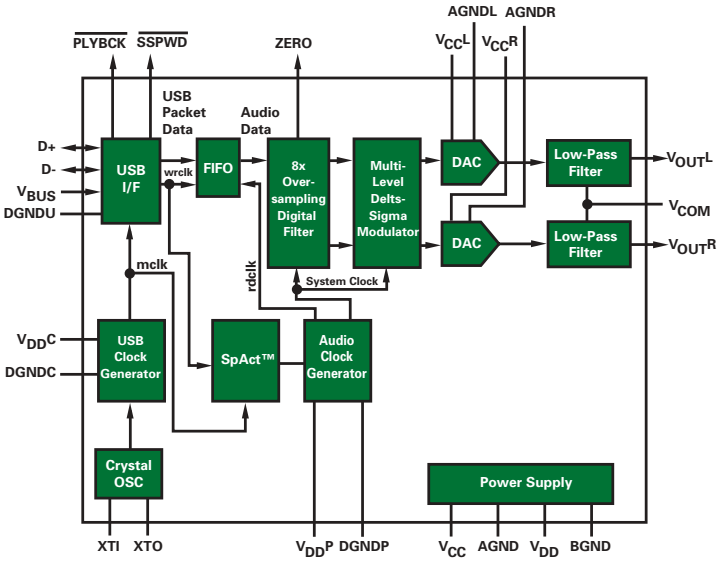

EUREKA 147 DAB PRODUCTS

Eureka Digital Audio Broadcasting (DAB) digital radio offers listeners more stations and higher fidelity sound. It offers more than just audio: a robust data stream transforms radio into personal communication and information delivery with content on demand from song lyrics, album names, stock quotes, traffic and weather reports to news, sports and more.

The digital radio receiver industry must also change to help the market grow to its full potential. More consumers will want affordable, portable (battery-operated), and full-featured digital products that can accommodate the advantages of Eureka DAB digital radio.

The digital radio designer must have solutions that are inexpensive, power efficient, easy-to-use and flexible to create products that will take advantage of the great growth potential and changes that the Eureka DAB market provides.

With Eureka DAB digital radio, there is no one single chip or piece of software that solves the challenges of digital radio design. Meshing a radio frequency (RF) with a digital subsystem is complex, and should not be solved by simply dealing with one portion of the design.

TI, with software from Radioscape, offers a complete digital radio solution through the TMS320DRE200 digital baseband. TI's complete solution overcomes the challenges previously mentioned:

- Lowest bill of materials in the industry today
- Lowest system power consumption
- Flexible, enabling more than just digital radio with easy-to-implement functions
- A complete system design, incorporating the digital baseband, software, analog subsystem, evaluation modules, reference designs, and DRE200-based modules.

TI's complete digital baseband, the TMS320DRE200, is a comprehensive solution that includes highly integrated components, an evaluation module and a fully supported reference design. The TMS320DRE200 includes the following:

TMS320DRE200 Digital Baseband

The ETSI 300 401-compliant baseband performs channel and source decoding on a single chip. In addition, this device can decode all Eureka modes and perform user interface functions.

TO KNOW MORE ▶

For detailed information about Eureka DAB components featured in this issue:

Digital baseband solution	16
Class-D audio power amp	17
Stereo audio power amp	17
Consumer audio DAC	18
1-A LDOs	21
Ultra-low-noise LDOs	21
Output-cap-free LDOs	27

EUREKA SYSTEM BLOCK DIAGRAM

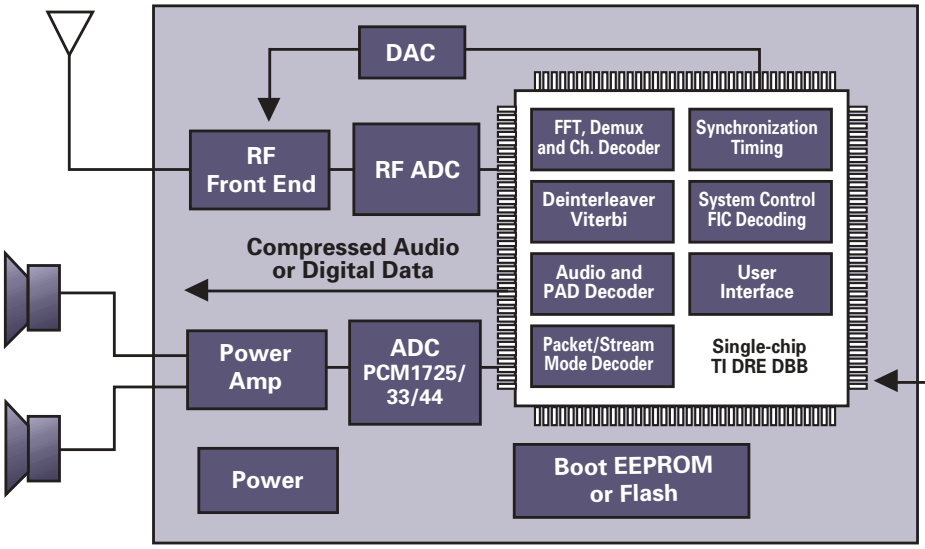

This figure illustrates TI's complete solution for a digital radio. This standard-compliant, single-chip, digital baseband is based on a TI DSP. Currently, applications can be built on top of the single-chip baseband using software architecture to enable data features and integrated combo products, such as MP3.

Continued from the previous page

TMS320DRE200 Analog Subsystem

TI has bundled the analog-to-digital converter, digital-to-analog converter, the power amplifier, and other power management devices that are needed for a Eureka 147 system. By bundling together these components, the manufacturer is assured of the lowest system BOM costs.

TMS320DRE200 Evaluation Module (EVM)

The DRE200 EVM gives designers a chance to evaluate the total solution that the TMS320DRE200 provides. The DRE200 EVM includes an evaluation board, schematics, user guides, human machine interface (HMI) source code and the digital radio object code. Available now, the EVM (DRE200EVAL) costs $5,000.

TMS320DRE200 Turnkey Reference Design and DRE200-based Module

The DRE200 Reference Design ensures that manufacturers will be able to minimize their time-to-market and design efforts. Another solution that shortens time-to-market are fully assembled circuit boards that plug into existing or new radio designs. Please contact TI's digital radio team for more details on these solutions at digitalradio@ti.com

DIGITAL BASEBAND SOLUTION

TMS320DRE200

Get samples, datasheets, app reports and EVMs at:
www.ti.com/sc/device/tms320dre200

The Eureka 147 DAB digital radio receiver solution is the first open, software-driven, power efficient, complete receiver design available in the industry.

Key Features

- Industry's lowest cost baseband
- < $40 for total BOM cost for a DAB receiver
- Integrated baseband leveraging TI's DSP economy of scale and process technology
- No DRAM/ SRAM, microcontroller required for audio and PAD decoding
- Software implementation minimizes cost to add new features
- Ease of use due to:
  - Turnkey reference design: designers can start building DAB products in 3-6 months
  - Process: license turnkey reference design –> customize user interface –>manufacture
  - TI and third-party support can customize reference design
  - Complete evaluation board
  - Local support worldwide
  - One-stop shopping for a number of ICs in the receiver
- Software driven, open and scalable platform gives flexibility to replace/add any feature software modules with TI's DSP tools (e.g. adding MP3 to DAB on the DRE200 DSP)
- Power efficiencies resulting from 175 mW of baseband power and lowest system power

Other features and specifications of the DRE200 baseband include:

- Can interface to an external microcontroller (not required for operation)
- Disturbance-free operation during multiplex sub-channel reconfiguration or ensemble switch
- Can feed data to external TPEG or MOT decoder and external memory
- 3.3 V and 1.6 V operation
- Packaging: 144-pin TQFP or 144-pin MicroStar BGA™
- -40° C to +85° C

TMS320DRE200 Block Diagram

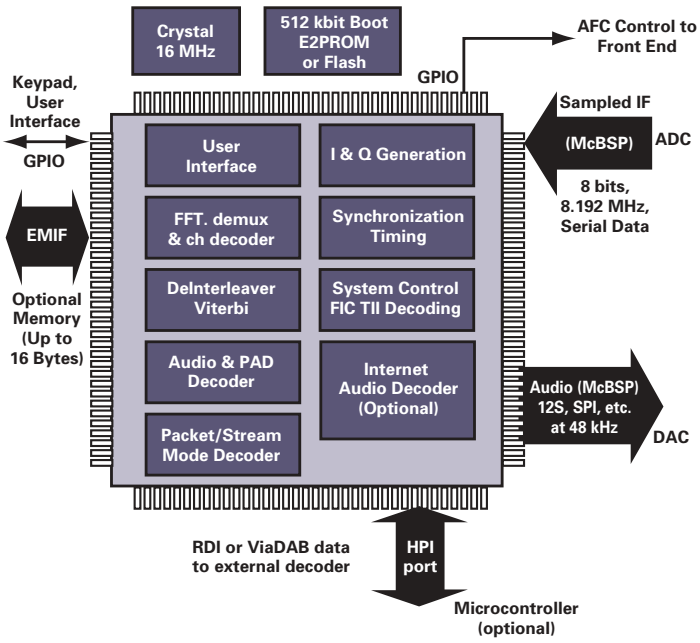

Applications

- AV receivers
- Mini/micro component stereo systems
- Integrated Internet audio/stereos
- IA player/digital radio
- Cell phone/IA player/digital radio
- PDA/IA player/digital radio
- Automotive

TPA2000D4 Block Diagram

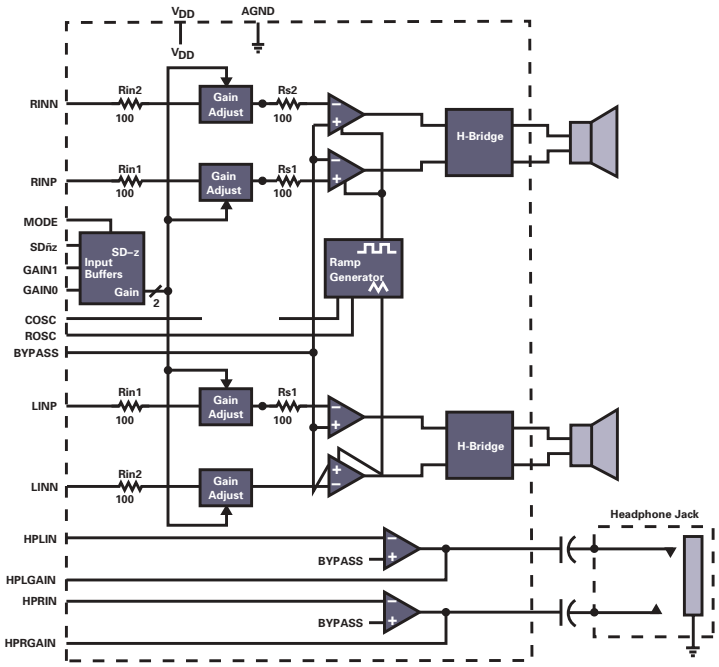

2-W STEREO FILTER-FREE CLASS-D AUDIO POWER AMP WITH INTEGRATED STEREO HEADPHONE AMPLIFIER

TPA2000D4

Get samples, datasheets, app reports and EVMs at:
www.ti.com/sc/device/tpa2000d4

The TPA2000D4 is a 2-W stereo bridge-tied-load (BTL) class-D amplifier designed to drive speakers with as low as 4-Ω impedance. The amplifier uses TI's second-generation modulation technique, which results in improved efficiency and SNR, and also allows the device to be connected directly to the speakers without the use of the LC output filter commonly associated with class-D amplifiers.

Key Features

- Efficient operation provides maximum battery life with minimal heat
- Filter-free operation
- Integrated stereo headphones
- Integrated gain control
- Low supply current (9 mA)
- Ultra-low shutdown current (< 0.05 µA)
- Drives 4-Ω speakers

Applications

- Notebook PCs
- Flat panel displays

TPA6011A4 Application Circuit

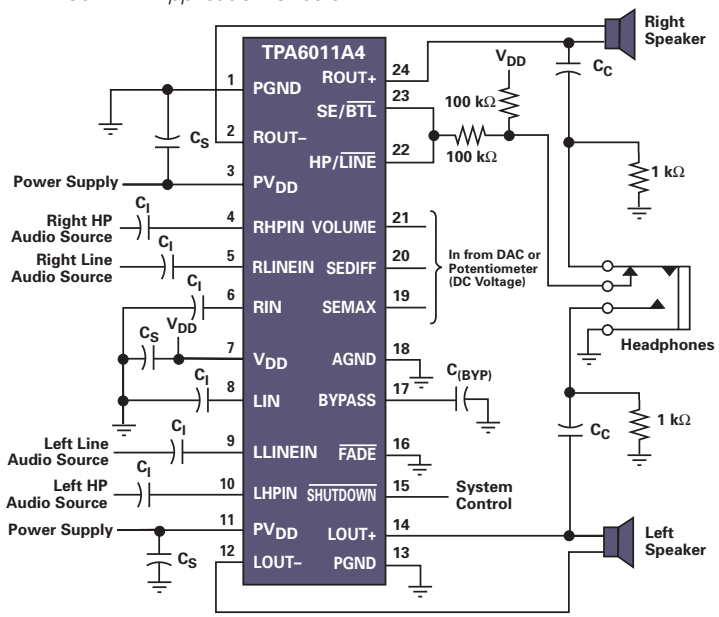

NEXT-GENERATION AUDIO POWER AMPS PROVIDE INTEGRATED GAIN, DC VOLUME AND DIGITAL VOLUME CONTROL

TPA6011A4/0252/0212

Get samples, datasheets, app reports and EVMs at:
www.ti.com/sc/device/partnumber
Replace partnumber in URL with tpa6011a4, tpa0252 or tpa0212

These stereo audio power amplifiers drive 2 W/channel of continuous RMS power into a 3-Ω load. These devices minimize the number of external components needed, which simplifies the design and frees up board space for other features.

Key Features

- Integrated gain settings (TPA0212)
- DC volume control (TPA6011A4)
- Digital volume control (TPA0252)
- Differential inputs
- Integrated stereo headphones
- Stereo input MUX
- Drives 3-Ω speakers

Applications

- Notebook computers
- Flat panel displays

:

DAC FOR CONSUMER AUDIO APPLICATIONS

PCM1725/33/44

Get samples, datasheets, app reports and EVMs at:
www.ti.com/sc/device/partnumber
Replace partnumber in URL with pcm1725, pcm1733 or pcm1744

The PCM1725/33/44 low-cost stereo audio DACs operate off of a 256 f_S or 384 f_S system clock. The DAC contains a third-order Delta-Sigma modulator.

Key Features

- Complete stereo DAC includes digital interpolation filter and analog output amplifier
- Dynamic range: 95 dB
- Multiple sampling frequencies: 16 kHz to 96 kHz
- 8X oversampling digital filter
- System clock: 256 f_S/384 f_S
- Normal or I^2S data input formats
- Packaging: Small 14-pin SOIC

Applications

- Low-cost, CD-quality consumer audio applications

PCM1725 Block Diagram

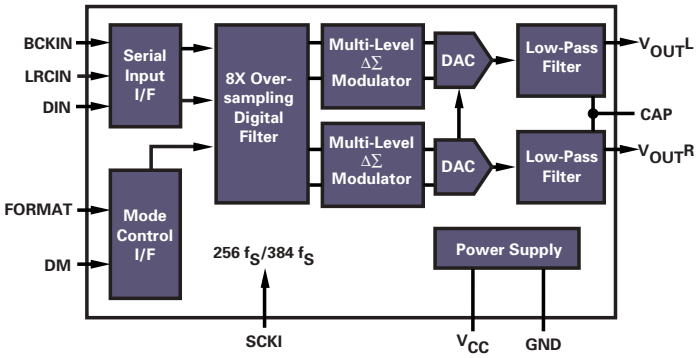

HD RADIO™ PRODUCTS

For more than 80 years, analog AM/FM broadcasters have provided listening enjoyment for millions of Americans. Within the past 10 years, a dedicated effort, led by iBiquity Digital Corporation, created a new radio technology that improves upon existing analog AM/FM radio — HD Radio™ technology. Providing CD-quality sound, HD Radio technology makes it possible to transmit digital quality, free of the static, hiss, pops and fades of today's AM and FM broadcasts. In addition, HD Radio technology allows stations to transmit wireless data to people anytime, anywhere.

In order to implement this technology, acquisition, demodulation, deinterleaving, audio decode and the other HD Radio signal processing functions need to be handled on a single chip. In addition, there's a demand for feature-rich and integrated end products. By offering a programmable, scalable and comprehensive DSP-based design to these signal processing challenges of HD Radio receiver design, TI provides low-risk solutions for a quickly changing digital radio market. TI's TMS320DRI200 DSP-based digital baseband chip enable digital radio manufacturers to launch innovative and differentiated products.

TMS320DRI200 Digital Baseband

As the industry's first digital baseband to support iBiquity's HD Radio technology, the single-chip TMS320DRI200 chip incorporates digital channel source, data decoding and demodulation functions.

TMS320DRI200 Software

The DRI200 is based on a programmable TMS320C64x™ DSP core, which provides three major advantages:

- **Reduced design risk**
  With an emerging standard such as HD Radio, design changes, updates and alterations to the standard can be easily and quickly accommodated in software instead of stopping development to redesign and fabricate a new hardwired ASIC.
- **Fast time-to-market**
  Receiver manufacturers can deliver digital AM/FM radios in 2003 because the TMS320DRI200, the industry's first HD radio baseband, is available today.
- **Greater differentiation**
  Adding a manufacturer's own software or innovative features such as MP3 decoding can be easily added to the HD Radio receiver through software.

Continued on the next page

TO KNOW MORE ▶

For detailed information about HD Radio™ components featured in this issue:

HD Radio baseband solution	20
1-A, output-cap-free LDOs	21
Ultra-low-noise LDO	21
Output-cap-free LDOs	27

HD RADIO™ SYSTEM BLOCK DIAGRAM

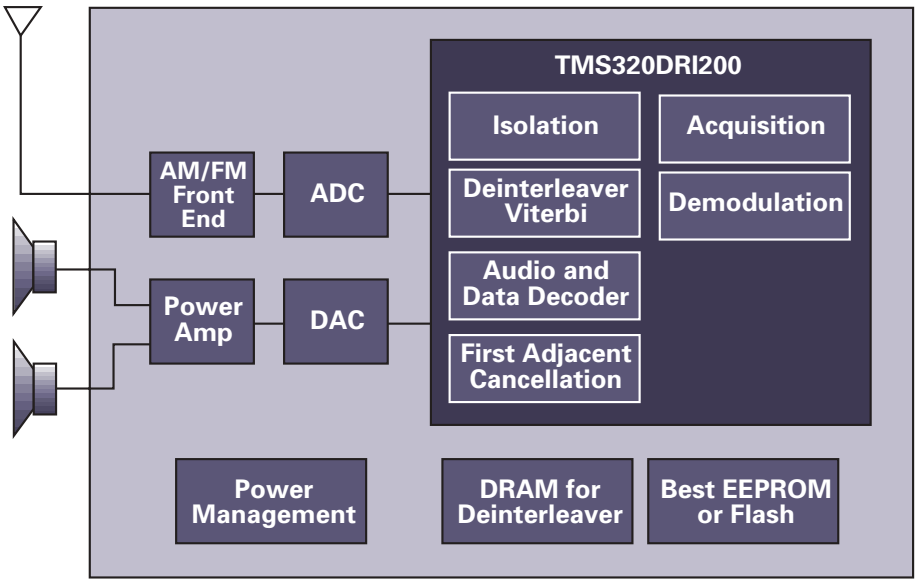

This figure illustrates the solution for HD Radio. This HD Radio-compliant baseband is based on a TI DSP. Currently, applications can be built on top of the single-chip baseband using software architecture to enable data features and integrated combo products like MP3.

Continued from the previous page

TMS320DRI200 Analog

The analog components needed for an HD radio are also provided by TI. These include the digital-to-analog converter, power amplifier and other power management devices.

TMS320DRI200-based IBOC Digital Module (IDM)

The IDM combines the memory and appropriate interfaces on a credit-card sized board.

Designed by iBiquity, the IDM reduces the complexity of a HD radio receiver as well as the development and deployment time for manufacturers. The IDM is designed to plug into existing AM/FM radio manufacturer's products. The IDM from iBiquity is available now to licensed radio receiver manufacturers. Please visit our website at **www.ti.com/sc/digtialradio** or send an email to **digitalradio@ti.com.**

FIRST HD RADIO DIGITAL BASEBAND

TMS320DRI200

Get samples, datasheets, app reports and EVMs at:
www.ti.com/sc/device/tms320dri200

TMS320DRI200

The TMS320DRI200 is the first baseband solution for HD Radio™ technology for radio receiver manufacturers in the industry.

Key Features

- Compatible with iBiquity's HD Radio system
- On-chip data decoding
- Compatible with standard audio DAC interfaces
- Interface to external microcontroller, DRAM and SRAM
- JTAG emulation
- 40° C to 85° C operation
- Fast time-to-market: Available today, the DSP-based solution enables receiver manufacturers to deliver HD Radio™ technology in 2003
- Low risk: With evolving standards, changes can be made easily in software
- Enables product integration: Software approach offers ability to quickly and easily create integrated and innovative products
- Low-cost roadmap: DRI200 chipset lowers system cost and shrinks form factor

Applications

- AV receivers
- Mini/micro component stereo systems
- Integrated internet audio/stereos
- IA player/digital radios
- Automotive

TMS320DRI200 Digital Baseband

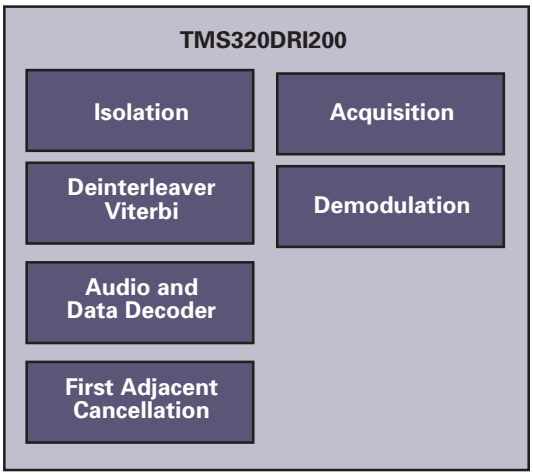

TPS725xx/726xx Block Diagram

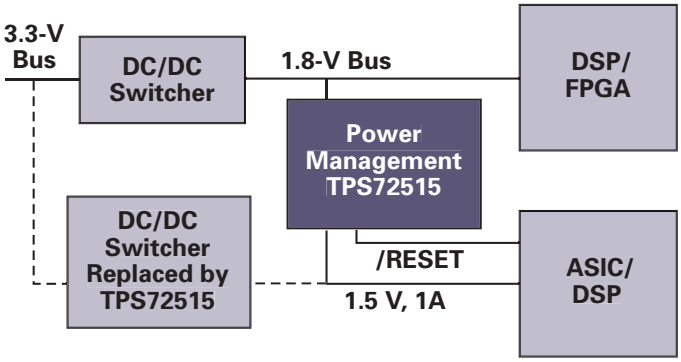

LOW INPUT VOLTAGE, OUTPUT-CAP-FREE 1-A LDOS FOR SIMPLE, EFFICIENT REGULATION

TPS725xx/726xx

Get samples, datasheets, app reports and EVMs at: power.ti.com

The TPS725xx/726xx families of Low Dropout Regulators (LDOs) help you achieve as high as 83% efficiency with the low input voltage feature, rivaling a switch mode solution. These devices offer simplicity, minimized component count, and low noise performance in post-regulation applications, such as shown in the diagram.

Applications

- Post-regulation of switch mode supplies
- Powering core voltages of DSPs, FPGAs, ASICs, and microprocessors

Key Features

- Supports input voltages as low as 1.8 V (and up to 5.5 V), allowing up to 83% efficiency.
- No output capacitor required for stability
- 1-A LDO with integrated SVS (50 ms delay), TPS725xx
- 1-A LDO with integrated SVS (200 ms delay), TPS726xx
- 1.5/1.6/1.8/2.5 V fixed output, and adjustable output versions available
- Dropout voltage typically 170 mV at 1 A
- Less than 1-µA quiescent current in shutdown mode
- Packaging: SOT223-5 or DDPAK

TPS791xx PSRR Performance

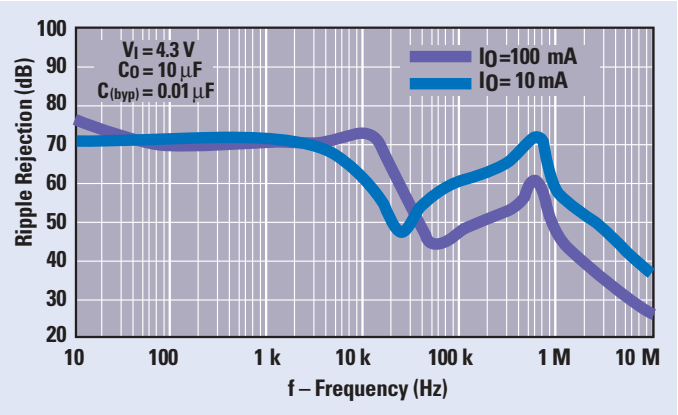

TPS791xx PSRR Performance

Device[1]	I_O (mA)	V_O (V)	Peak Current (mA)
TPS791xx	100	1.8/3.3/4.7/adj.	285
TPS792xx	100	2.5/2.8/3.0/adj.	285
TPS793xx	200	1.8/2.5/2.8/2.85/ 3.0/3.3/4.75/adj.	285
TPS794xx	250	1.8/2.5/2.8/3.0/3.3/adj.	700
TPS795xx	500	1.6/1.8/2.5/3.0/3.3/adj.	2400
TPS796xx	1000	1.8/2.5/2.8/3.0/3.3/adj.	2400
TPS786xx	1500	1.8/2.5/2.8/3.0/3.3/adj.	2400

[1]xx represents the 2 digits of output voltage.

ULTRA-LOW-NOISE, HIGH-PSRR, FAST-RF LDO IN SOT-23

TPS791xx/TPS792xx/TPS793xx/TPS794xx/ TPS795xx/TPS796xx/TPS786xx

Get samples, datasheets and EVMs at: power.ti.com

The TPS79xxx family of Low-Dropout Regulators (LDOs) features extremely high PSRR and ultra-low-noise performance to support noise-sensitive applications such as audio circuits.

Key Features

- Output current: 100 mA to 1.5 A
- Input voltage: 2.7 V to 5.5 V
- Output capacitor: 1.0-µF or 2.2-µF ceramic
- High PSRR: 70 dB at 10 kHz
- Ultra-low noise: 15 µVRMS (TPS791xx)
- Fast start time: 50 µs (TPS792xx)
- Dropout voltage: 38 mV at 100 mA (TPS791xx)
- Packaging: SOT-23-5, MSOP-8, SOT-223-5, DDPAK

Applications

- RF
- Audio
- DSP/FPGA/ASIC/microprocessor supplies

TO KNOW MORE ►

For detailed information about Portable Audio components featured in this issue:

Programmable DSP	23
System-on-a-chip	23
Stereo audio codec	24
Low-power DAC	24
Stereo headphone APAs	25
Low-power stereo DACs	25
USB-to-ATA bridge solution	26
1394 integrated devices	26
Low-power audio codec	27
Output-cap-free LDOs	27
1-A LDOs	21
Ultra-low-noise LDOs	21

PORTABLE AUDIO

When designing a portable Internet audio player, engineers today must contend with a wide range of possible new capabilities while, at the same time, ensuring the timely introduction of new products with competitively differentiated features. The dominant preferences at any one time in the consumer electronics market change rapidly and repeatedly. A portable audio system at one time meant an MP3 player, but now designers have a multitude of factors to grapple with, such as new compression formats like WMA and AAC, security issues concerning digital rights management (DRM), a wider variety of storage options including hard disk drives and even video capabilities.

Expanding storage options and the inclusion of video offer examples of the flexibility and broad technology requirements that designers of portable audio systems place on component suppliers like TI.

When Internet audio players were first introduced, they exclusively used flash memory for storage. Now though, the costs of revolving media have declined to the point where designers must consider hard disk drives (HDD) as a possibility for portable audio players. Multiformat compact disk (CD) players and HDD-based audio jukeboxes now share the market with flash-based audio players. The increased feature set of today's portable audio players has created exciting new opportunities in the car and home audio market.

TI is one of the few component suppliers that has the depth and breath of technical expertise needed to address all of the complex issues involved in portable audio, video, imaging and other emerging capabilities in the consumer electronics marketplace. With its highly integrated devices, high levels of code re-use, exceptional development tools and an outstanding third party network, TI offers what designers of portable audio systems need to develop differentiated and competitive products.

INTERNET AUDIO/PORTABLE PLAYER SYSTEM DIAGRAM

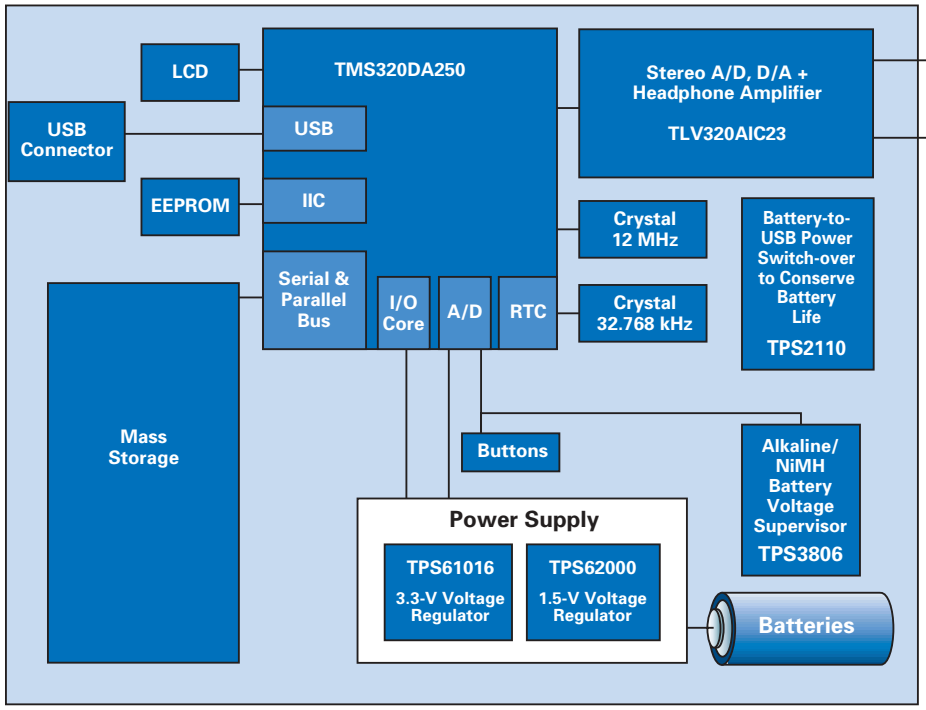

Portable audio player systems vary greatly, depending on the type of mass storage used to store recorded audio and music files. Once a user selects a song title or track number to be played, the file system initializes and the DSP begins loading DRM software that may be required. The digital rights (if any) of the music file are determined, the type of file format is determined and the DSP dynamically loads the appropriate MP3, WMA, AAC or additional format decoder into program memory and begins processing the file. Once the audio stream has been decoded, extra audio processing can be applied to enhance and shape the reproduction. This post processing can include equalization and reverberation to adjust the sound to the user's taste and to stimulate the effect of reproducing the performance in different acoustic spaces.

TMS320DA250 Block Diagram

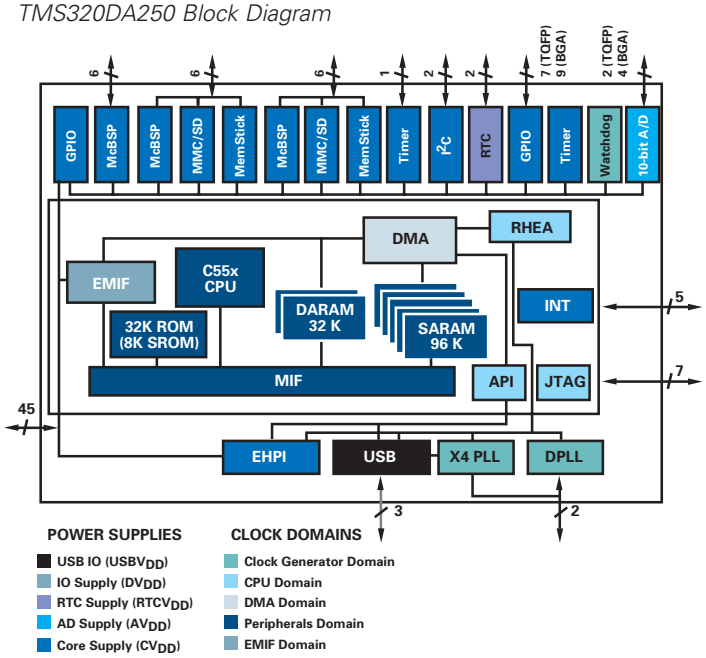

PROGRAMMABLE DSP WITH ON-BOARD USB

TMS320DA250

Get samples, datasheets, app reports and EVMs at:
www.ti.com/sc/device/tms320da250

TI provides complete Internet audio solutions including audio-centric DSPs, evaluation modules (EVMs) and development tools in addition to a vast security and audio software algorithm library.

Key Features

- Enable 50% longer battery life and product differentiation with programmable DSP (200- to 400-MIPS)
- Smaller on board space with an integrated processor design featuring on board USB, real-time clock and 10-bit ADC
- Flexibility to chose desired storage medium via support for Memory Stick, SD, MMC, Compact Flash (CF), and more
- Seamless listening with a fully integrated software library including AAC, ADPCM, MP3, WMA, WAV and more

Applications

- Multifunction Internet audio players (portable audio players, cell phones, PDAs, digital cameras, etc.)
- Portable CD players
- Portable jukeboxes
- Portable radios/boom boxes

TMS320DM310 Block Diagram

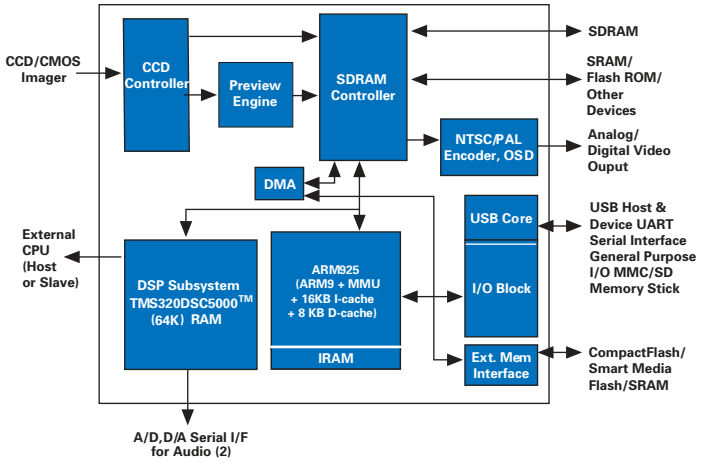

Applications

- Multifunction Internet audio players (portable audio players, cell phones, PDAs, digital cameras, etc.)
- Portable CD players
- Portable jukeboxes
- Portable radios/boom boxes

HIGH-PERFORMANCE DIGITAL MEDIA SOLUTION

TMS320DM310

Get datasheets and app notes at:
www.ti.com/sc/device/tms320dm310

The DM310 programmable DSP-based solution is a highly integrated multimedia engine offering unparalleled performance, leading-edge process technology and flexibility for next-generation portable multimedia products.

Key Features

- Programmable support for MP3/DolbySM AC3/G.7xx audio decode and playback
- MP3 encode and decode, MP3 pro, WMA, AC3, AAC, G.7xx
- Real-time MPEG-1, -2, -4 video encode at CIF resolution (352 ◊ 288)
- Real-time MPEG-2, -4 video decode at VGA resolution (640 ◊ 480)
- Supports multiple applications and file formats including MPEG-4, MPEG-2, MPEG-1, JPEG, M-JPEG, H.263, MP3, AAC, H.26L, DivX, and WMV
- Highly-integrated system-on-a-chip (SOC) design reduces overall system cost

LOW-POWER STEREO AUDIO CODEC

TLV320AIC23

Get samples, datasheets, app reports and EVMs at:
www.ti.com/sc/device/tlv320aic23

The TLV320AIC23 high-performance, low-power stereo audio Codec — with highly integrated functionality — allows many features to fit into a small area with minimal power consumption.

Key Features

- Very low-power dissipation: 23 mW in playback mode
- 90-dB SNR ADC, 100-dB SNR DAC
- Integrated headphone amplifier: 40 mW into 16 Ω
- I²C or SPI protocol for control
- Microphone input with side-tone mixer
- Maximum sample rate of 96 kHz
- Bypass mode enables an all-analog path
- Packaging: Small, 25 mm² (MicroStar BGA or RHD) or TSSOP

Applications

- Multifunction Internet audio players (portable audio players, cell phones, PDAs, digital cameras, etc.)
- Portable CD players
- Portable jukeboxes
- Portable radios/boom boxes

TLV320AIC23 Block Diagram

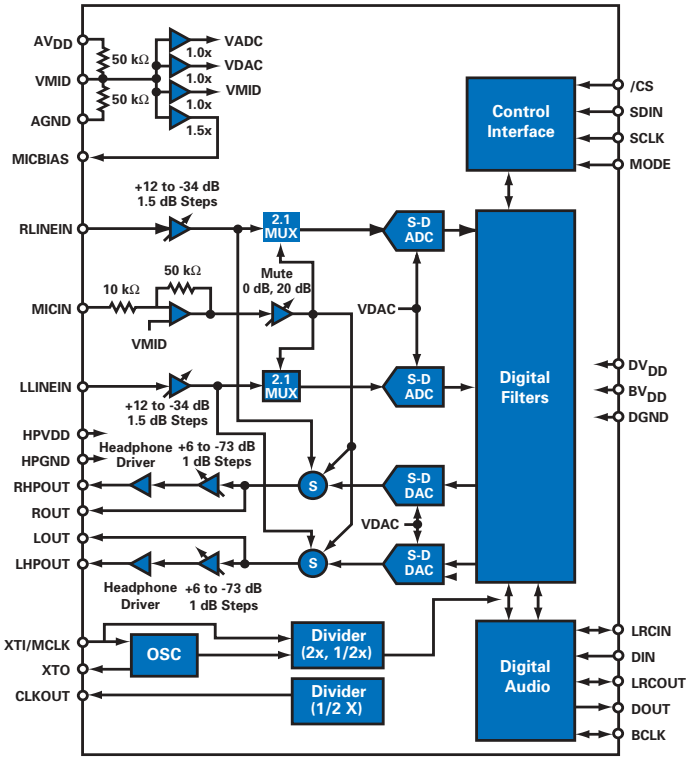

LOW-POWER DAC WITH ANALOG LINE INPUTS

TLV320DAC23

Get samples, datasheets, app reports and EVMs at:
www.ti.com/sc/device/tlv320dac23

A high-performance, low-power stereo audio DAC with highly integrated analog functionality includes analog line inputs with an analog bypass path and a stereo headphone driver.

Key Features

- 100-dB SNR DAC
- Very low power dissipation: 9 mW in playback mode
- Integrated headphone amplifier: 40 mW into 16 Ω
- I²C or SPI protocol for control
- 8-kHz to 96-kHz sampling frequency support
- Power down power consumption <15 µW
- Packaging: Small, 25 mm² (MicroStar BGA or RHD) or TSSOP

Applications

- MP3 audio players and recorders
- Internet jukeboxes
- Cell phones with audio
- Digital cameras with audio
- Personal digital assistants with audio
- Any digital audio application

TLV320DAC23 Block Diagram

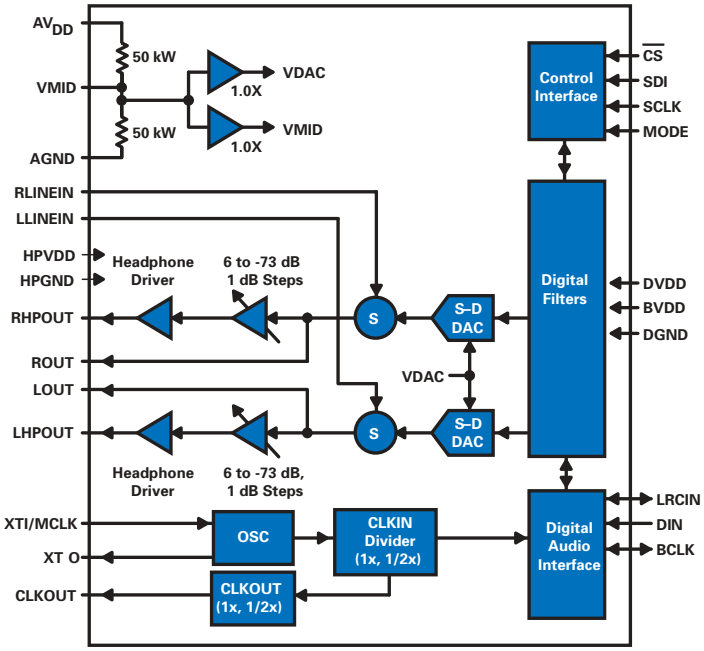

TPA6111A2 Typical Application Circuit

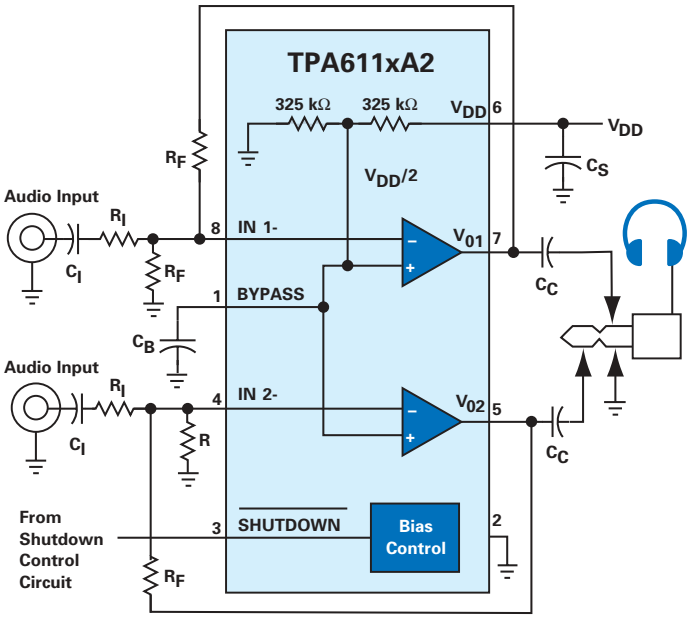

STEREO HEADPHONE AUDIO POWER AMPLIFIERS WITH OPTIMIZED DEPOP CIRCUITRY

TPA611xA2

Get samples, datasheets, app reports and EVMs at:
www.ti.com/sc/device/tpa611xA2

The TPA6110A2, TPA6111A2 and TPA6112A2 popless APAs are ideal for stereo headphone applications in portable equipment, such as MP3 players, wireless phones, Internet appliances, voice recorders and CD players. Total harmonic distortion plus noise (THD+N) for 32-Ω loads is reduced to less than 0.02 percent at 1 kHz and is less than 1 percent across the audio band of 20 Hz to 20 kHz.

Key Features

- 150-mW stereo output drive
- Depop circuitry eliminates "pops" and "clicks"
- Internal mid-rail generator minimizes external components
- Ultra-small, MSOP packaging reduces solution size
- Pin compatible to the TPA1x2 family
- Characterized for operation from –40° C to 85° C

Applications

- MP3 or Internet audio players
- Wireless handsets/headsets
- Internet appliances
- Voice recorders

PCM177x Block Diagram

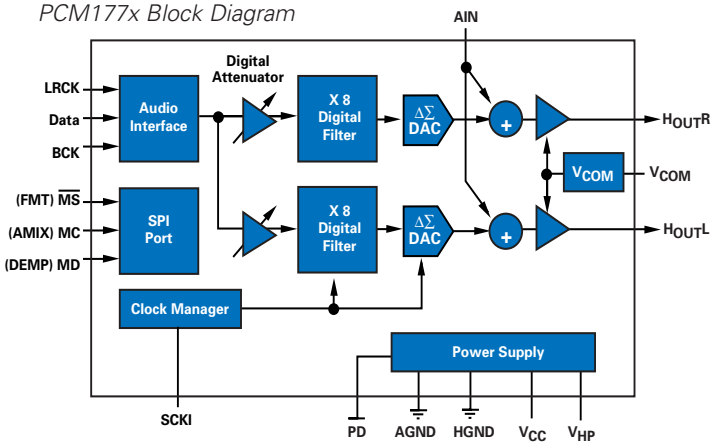

Applications

- Multifunction Internet audio players (portable audio players, cell phones, PDAs, digital cameras, etc.)
- Portable CD players
- Portable jukeboxes
- Portable radios/boom boxes

LOW-VOLTAGE, LOW-POWER STEREO DACS

PCM177x

Get samples, datasheets, app reports and EVMs at:
www.ti.com/sc/device/partnumber
Replace partnumber in URL with pcm1770, pcm1771, pcm1772 or pcm1773

Within the family, the PCM1770/71 have headphone drive ability in place of the line output of the PCM1772/73. Control-wise, the PCM1771/73 are configured using hardware pins while the PCM1770/72 have a 3-line control port for full setup flexibility.

Key Features

- Analog performance (VCC1, VHP= 2.4 V):
- Dynamic range: 96 dB (typ)
- THD+N: 0.032% (typ)
- Output power at R L = 16 : 10 mW (stereo), 20 mW (monaural)
- Low power dissipation:
  - 9.6 mW at V_{CC1}, VHP= 2.4 V
    - System clock: 128 f_S, 256 f_S, 384 f_S
    - Sampling frequency: 5 kHz to 50 kHz
- Digital attenuation:
  - 44.1-kHz digital de-emphasis
  - Digital soft mute
  - Pop-noise free circuit
  - 1.6-V to 3.6-V single power supply
- 3.3-V tolerance
- Packaging: TSSOP16 and VQFN20 (4.2 mm x 4.2 mm)

INDUSTRY-LEADING, LOW-POWER USB 2.0-TO-ATA BRIDGE SOLUTION

TUSB6250

Get datasheets and app reports at
www.ti.com/se/device/tusb6250

The TUSB6250 bridge for USB 2.0-compliant PC storage peripheral products provides world-class throughput, enhancing the read/write performance of high-density storage media. A highly programmable and configurable architecture allows you to make use of a wide variety of off-the-shelf ATA/ATAPI devices. Industry-leading low power consumption-just 80 mA at 3.3 V-makes cable-powered drives a reality. For self-powered drives, the TUSB6250's low power consumption provides sufficient left-over power to recharge an onboard battery. Applications include hard disk drives, as well as PC peripherals that use HDDs as their storage media, including digital audio players and personal video recorders.

Key Features

- Low active power: 80 mA at 3.3 V (typ)
- Ultra-low standby power: 200 mA at 3.3 V
- Single 3.3-V supply operation with integrated 1.8-V regulator

TUSB6250 Block Diagram

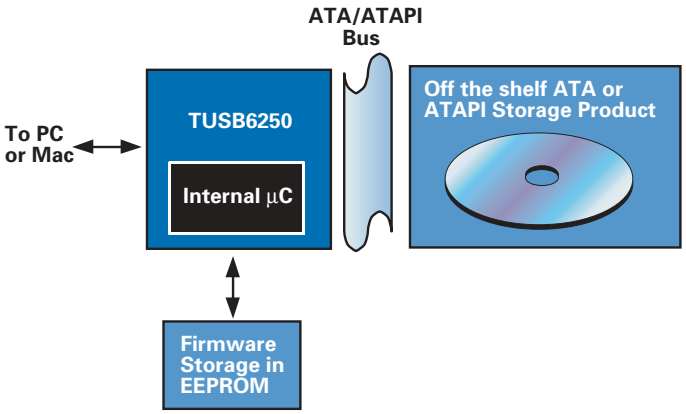

Applications

- Hard Disk Drives (HDDs)
- ZIP™ drives
- CD-RW
- DVDs
- Magneto-Optical (MO) drives
- Flash card readers
- USB 2.0-based digital audio players

HIGH-PERFORMANCE, 2-PORT, INTEGRATED PHY AND LINK LAYER CHIP FOR PC PERIPHERALS

TSB43AA82/AA82A/AB82

Get datasheets at: www.ti.com/pcibridge

The TSB43AA82 integrated PHY and link layer controller supports asynchronous transfers, providing a 1394 connectivity solution for high-capacity digital audio players (DAPs). This high-speed, 400-Mbps connection allows you to incorporate capacity in your DAP without sacrificing small form factor. Players like the Apple iPOD® DAP use a 1.8-inch hard disk drive as the storage medium for songs and data. The TSB43AA82 will provide the high-speed link to the computer needed to load a large number of songs in a reasonable timeframe. A generic 16/8-bit host bus interface supports parallel, multiplexed connections to the microcontroller at rates up to 40 MHz.

Key Features

- IEEE 1394a-2000 compliant
- Single 3.3-V supply
- Internal 1.8-V circuit reduces power consumption
- Integrated 400 Mbps, 2-port PHY
- Internal voltage regulator
- IEEE 1394 related functions:
- Automated read response for ConfigROM register access
- Automated single retry protocol and split transaction control

TSB43AA82 Block Diagram

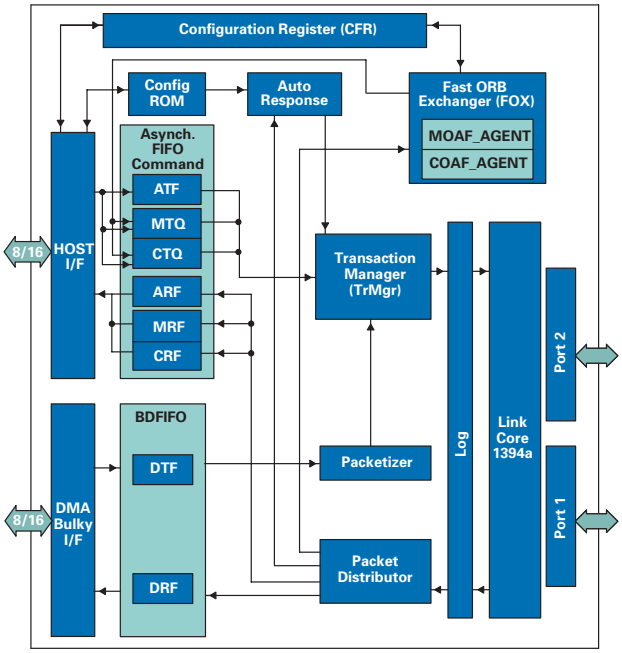

Applications

- High-capacity digital audio players
- PC and Mac peripherals

PCM3008 Block Diagram

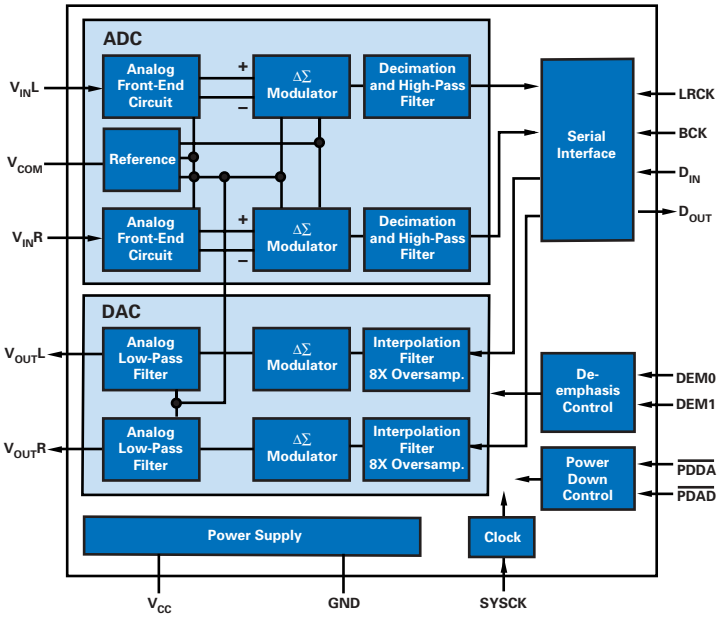

LOW-POWER, STEREO AUDIO CODECS

PCM3008

Get samples, datasheets, app reports and EVMs at: www.ti.com/sc/device/pcm3008

The PCM3008 is a low-cost, single-chip stereo audio Codec with single-ended, analog voltage input and output.

Key Features

- 2.4-V stereo audio Codec
- 16-bit, 48-kHz sampling, stereo audio Codec (hardware control only)
- Power supply: 2.4 V to 3.3 V
- Low power dissipation: 28 mW at 2.4 V
- Dynamic range: PCM3008, 90 dB (DAC), 88 dB (ADC)
- THS+N: 0.006%
- System clock: 256/384/512 f_S
- Power-down mode: 10 µA (ADC, DAC individual)
- Packaging: 16-lead TSSOP; AK4550 pin-compatible

Applications

- Portable audio players
- Home theater-in-a-box

TPS721xx Application Diagram

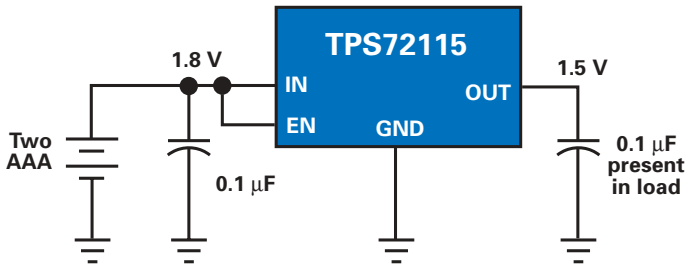

Applications

- Direct Regulation from 2/3-cell alkaline, NiMH, or NiCd, or 1-cell Lithium or Li+ batteries
- Post-regulation of switch mode supplies
- Powering core voltages of DSPs, FPGAs, ASICs, and microprocessors

LOW INPUT VOLTAGE, OUTPUT-CAP-FREE LDOS FOR SIMPLE, HIGHLY EFFICIENT REGULATION IN SOT-23 PACKAGE

TPS721xx/722xx

Get samples, datasheets, app reports and EVMs at: power.ti.com

The TPS721xx/722xx families of Low Dropout Regulators (LDOs) help you achieve as high as 83-percent efficiency with the low input voltage feature, rivaling a switch mode solution. These devices offer simplicity, minimized component count, and low noise performance in battery-powered applications.

Key Features

- Supports input voltages as low as 1.8 V (and up to 5.5 V), allowing up to 83% efficiency.
- Stable with 0.1 uF ceramic output capacitor (typically already present in loads).
- 150 mA version, TPS721xx
- 50 mA version, TPS722xx
- 1.5/1.6/1.8 V fixed output, and adjustable output versions available
- Dropout voltage typically 200 mV at 150 mA
- Less than 1-uA quiescent current in shutdown mode

TO KNOW MORE ►

For detailed information about Professional Audio components featured in this issue:

Microphone preamp	29
Audio volume controls	29
Digitally controlled preamp	30
Stereo audio ADC	30
4-channel audio DAC	31
Sample rate converter	31
Digital audio transmitters	32
Digital interface receiver	32
1-A LDOs	21
Ultra-low-noise LDOs	21
Output-cap-free LDOs	27

PROFESSIONAL AUDIO

The professional audio market demands high-performance audio systems, but, at the same time, these systems must be easy to use. For audio system designers, these requirements are intensified by the broad range of systems that fall within the professional market segment — from the home recording equipment and electric instruments of part-time musicians to the high-quality audio and distribution infrastructure needed for sophisticated recording studios.

As a result, designers of professional audio equipment are best served by a broad supplier of high-performance and highly functional audio components which can be easily designed into a wide variety of system types and brought to market quickly.

Many of TI's advanced audio devices fulfill these requirements. For example, TI's new 32-/64-bit floating-point audio DSPs are highly integrated devices that offer a dramatic performance increase. Designers can access and harness the full performance and flexibility of this programmable DSP through TI's industry-leading development tools, including a proven DSP integrated development environment (IDE), a DSP real-time operating system (RTOS), and an efficient C compiler. In addition, TI's advanced DSP and analog technology blends nicely with TI's advanced DSPs, analog technology and Burr-Brown's high-quality audio conversion and processing products. Together, these products provide a comprehensive tool kit for the hard-pressed system designer.

AUDIO RECORDING APPLICATION

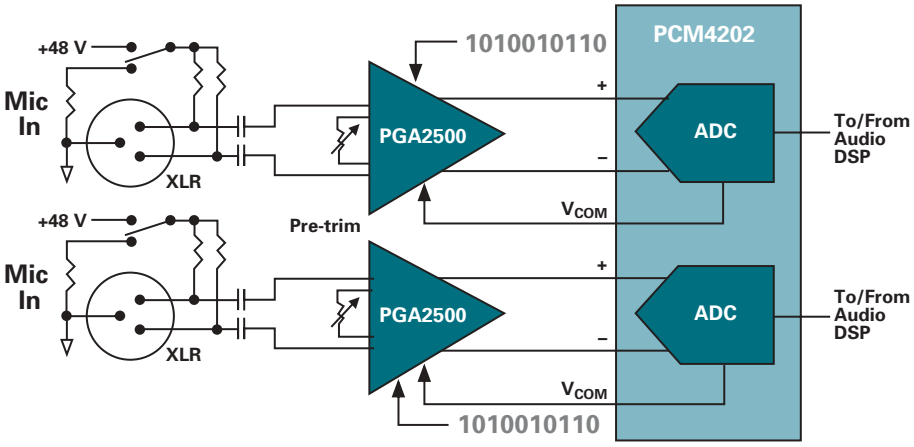

AUDIO PLAYBACK APPLICATION

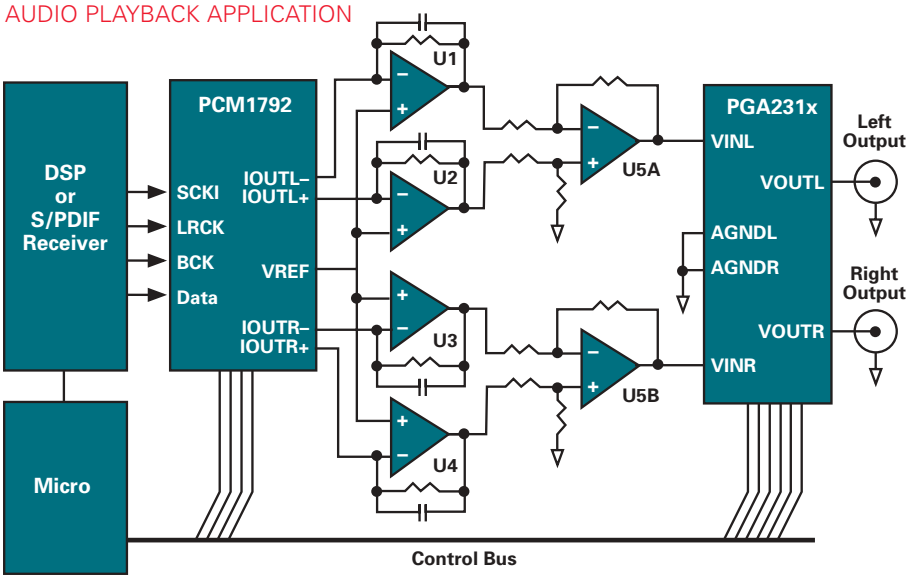

INA217 Block Diagram

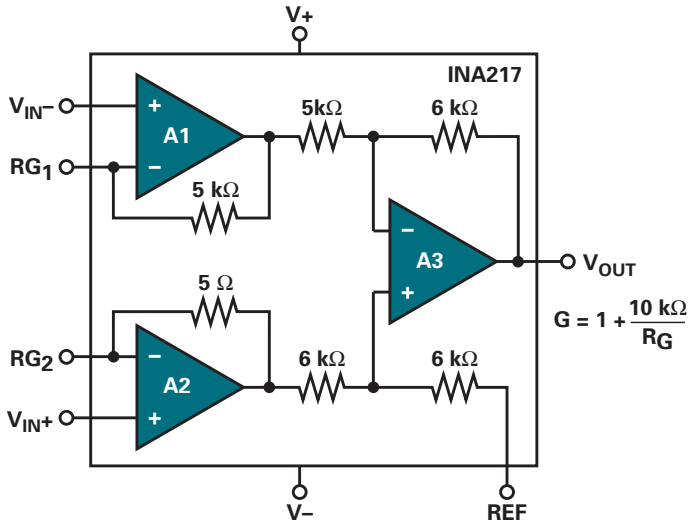

LOW-DISTORTION MICROPHONE PREAMP IS REPLACEMENT FOR SSM2017

INA217

Get samples and datasheets at: www.ti.com/sc/ina217

The INA217 is a low-noise, low-distortion, monolithic instrumentation amplifier. Its current-feedback circuitry allows it to achieve wide bandwidth and excellent dynamic response over a wide range of gain. The INA217 is ideal for low-level audio signals such as balanced low-impedance microphones. The device also offers wide supply voltage, excellent output voltage swing, and high output current drive — superior performance for professional audio applications.

Applications

- Professional microphone preamps
- Moving-coil transducer amplifiers

Key Features

- Low noise: 1.3 nV/$\sqrt{Hz}$ at 1 kHz
- Low THD+N: 0.004% at 1 kHz, G = 100
- Wide bandwidth: 800 kHz at G = 100
- Wide supply range: ±4.5 V to ±18 V
- High CMR: >100 dB
- Gain set with external resistor
- Near theoretical noise performance for 200-Ω source impedance
- Packaging: 8-pin DIP and SOL-16 widebody

PGA2310 and PGA2311 Block Diagram

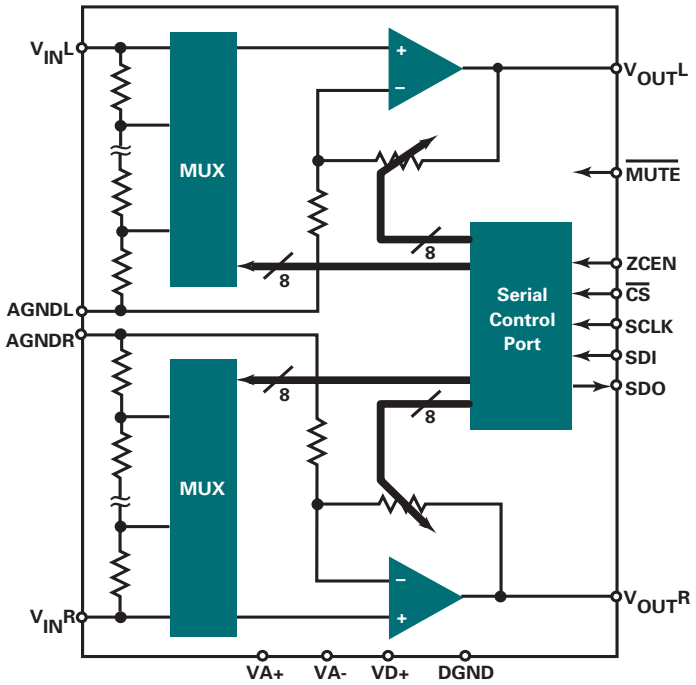

HIGH-PERFORMANCE AUDIO VOLUME CONTROLS

PGA2310, PGA2311 and PGA4311

Get samples and datasheets at:
www.ti.com/sc/device/partnumber
Replace partnumber in URL with pga2310, pga2311 or pga4311

The PGA2310 is a complete stereo digitally selectable analog volume control providing high-end audio performance. It includes a 16-bit serial interface and a precision matched resistor attenuator. The PGA2311 is a CMOS version with ±5-V analog power supply and is pin-software-compatible with the PGA2310. The PGA4311 is a 4-channel version of the PGA2311.

Applications

- Amplifiers and attenuators
- Mixers and control boards
- Broadcast equipment

Key Features

- Wide adjustable gain and attenuation range:
  - -95.5 dB of attenuation to +31.5 dB of Gain, with 0.5-dB steps
- Noise-free level transition
- Dynamic Range: 120 dB
- THD+N:
  - PGA2310: 0.0004% at 1 kHz
  - PGA2311U/PGA4311U (standard grade): 0.0004% at 1 kHz
  - PGA2311UA/PGA4311A (high grade): 0.0002% at 1 kHz
- Crosstalk at 1 kHz: -126 dBFS (PGA2310); -130 dBFS (PGA2311)
- Voltage swing: 27 V_{PP} (PGA2310); 7.5 V_{PP} (PGA2311)
- Power supplies:
  - PGA2310: ±15 V Analog, +5 V Digital
  - PGA2311/PGA4311: ±5 V Analog, +5 V Digital
- Packaging: SOL-16, and DIP-16

WORLD'S FIRST DIGITALLY CONTROLLED MICROPHONE PREAMPLIFIER IC

PGA2500

Get samples and datasheets at: www.ti.com/sc/device/pga2500

PREVIEW The PGA2500 is a digitally controlled microphone preamplifier designed for use as an analog front end for high-performance audio analog-to-digital converters. It features low noise and wide dynamic range, in addition to a fully differential I/O architecture and four programmable digital outputs for controlling external functions. The PGA2500 is an ideal choice for a wide variety of microphone types.

Key Features

- 0 dB, 10 to 65 dB in 1-dB steps
- Fully differential I/O
- Low noise: 1 nV/√Hz
- Includes DC servo
- Common-mode voltage input
- Four general-purpose digital outputs
- Serial interface
- ±5-V supply
- Packaging: 28-lead SSOP

PGA2500 Block Diagram

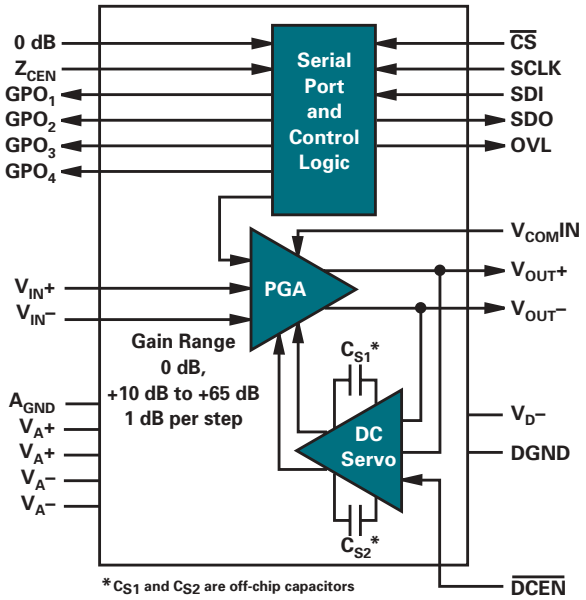

Applications

- Professional microphones
- Broadcast studio equipment
- Effects processors

HIGH-PERFORMANCE 24-BIT, 192-kHz, STEREO AUDIO ADC

PCM4202

Get samples and datasheets at: www.ti.com/sc/device/pcm4202

PREVIEW The PCM4202 is a high-performance, stereo ADC designed for professional audio applications. It supports 24-bit linear PCM output data with sampling frequencies up to 192 kHz. It can also be configured to output either 64x or 128x oversampled, one-bit Direct Stream Digital (DSD) data for both channels. The PCM4202 is also ideal for DVD-Audio and Super Audio Compact Disc (SACD) recording applications.

Key Features

- Dynamic range: 118 dB
- THD+N: -105 dB
- 24-bit PCM or 1-bit DSD output
- Supports PCM sampling frequencies up to 192 kHz
- Supports 64x and 128x DSD outputs
- Fully differential inputs
- Low power dissipation: 300 mW at f_S = 48 kHz; 330 mW at f_S = 96 kHz
- Packaging: 28-lead SSOP

PCM4202 Block Diagram

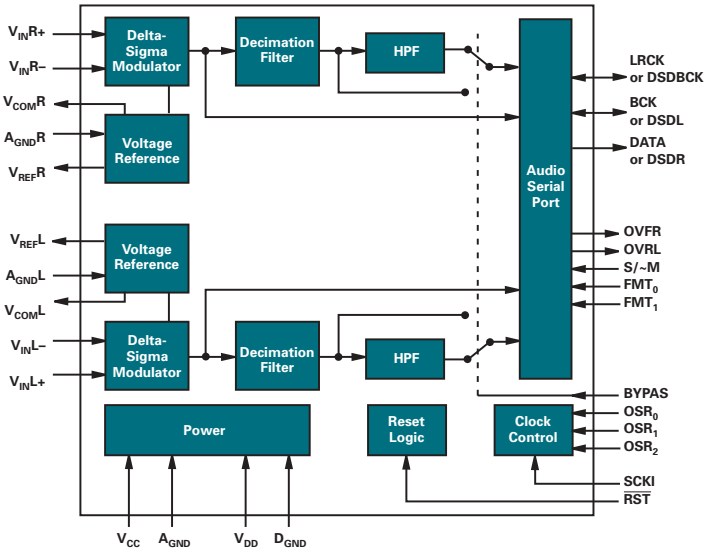

Applications

- Professional studio equipment
- DVD-Audio and super audio compact disc (SACD)

PCM4104 Block Diagram

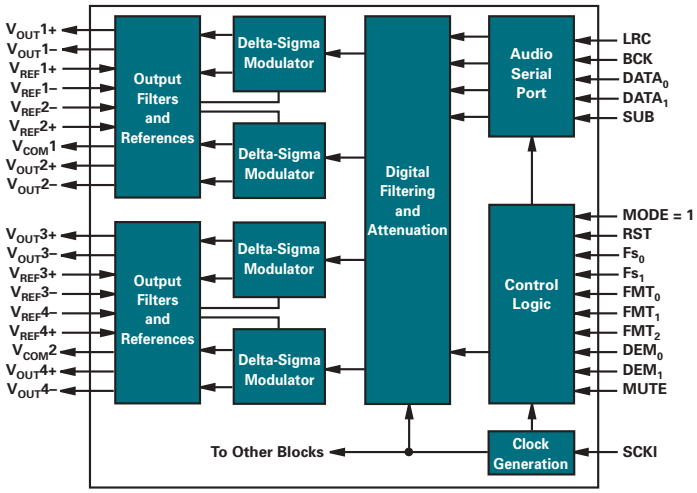

Applications
- Professional mixing consoles
- Broadcast studio equipment
- Effects processors

HIGH-PERFORMANCE 24-BIT, 192-kHz, 4-CHANNEL AUDIO DAC

PCM4104

Get samples and datasheets at: www.ti.com/sc/device/pcm4104

PREVIEW The PCM4104 is a high-performance, 4-channel DAC designed for professional audio systems supporting 24-bit linear PCM data and sampling frequencies up to 192 kHz. Its 8x oversampling digital interpolation filter and multi-level, delta-sigma modulator with switched capacitor output filter provide for excellent dynamic and sonic performance, as well as high tolerance to system clock phase jitter.

Key Features
- Accepts 16- to 24-bit PCM audio data
- Sampling rates up to 192 kHz
- Differential voltage outputs
- Dynamic range: 117 dB
- THD+N: -100 dB
- Standalone or software controlled configuration
- TDM format allows easy interface to DSP serial ports
- +3.3- or +5-V supply
- Packaging: 48-lead TQFP

SRC4192 Block Diagram

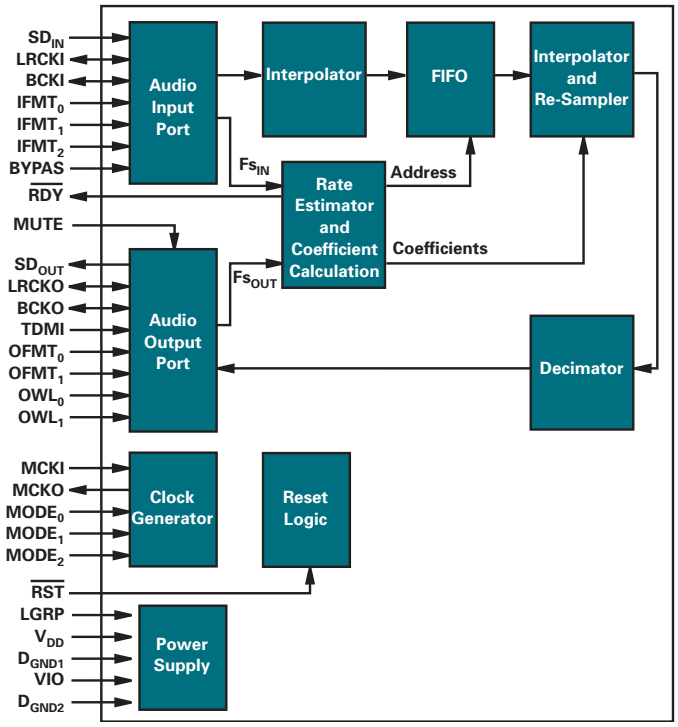

WORLD'S HIGHEST PERFORMANCE SAMPLE RATE CONVERTER ICs

SRC4192 and SRC4193

Get samples and datasheets at:
www.ti.com/sc/device/partnumber
Replace partnumber in URL with src4192 or src4193

PREVIEW The SRC4192 and SRC4193 are asynchronous sample rate converters designed for professional audio and broadcast applications. They provide a wide input-to-output sampling ratio range with excellent dynamic range and ultra-low distortion. The SRC4192 offers pin-programmable configurations, while the SRC4193 has a three-wire port for access to control register programming. Both operate from a single +3.3-V supply.

Key Features
- Supports input/output sampling frequencies up to 192 kHz
- Automatically detects input-to-output sampling ratio
- Wide input-to-output conversion range: 1:16 to 16:1
- Supports 64x and 128x DSD outputs
- Dynamic range: 144 dB
- THD+N: -140 dB
- Standalone (SRC4192) or software controlled (SRC4193) models available
- Packaging: 28-lead SSOP

Applications
- Professional broadcast equipment
- Recording studio consoles

DIGITAL AUDIO TRANSMITTERS FOR PROFESSIONAL STUDIO APPLICATIONS

DIT4096 and DIT4192

Get samples and datasheets at:
www.ti.com/sc/device/partnumber
Replace partnumber in URL with dit4096 or dit4192

The DIT4096 and DIT4192 are digital audio transmitters designed for both professional and consumer audio applications. Both support software and hardware operation, which makes them suitable for applications with or without a microcontroller. A flexible, serial audio interface supports standard audio data formats and easy interface to audio DSP serial ports.

Key Features

- Compliant with AES-3, IEC-60958 and EIAJ CP1201 standards
- Sampling rates up to 96 kHz (DIT4096); 192 kHz (DIT4192)
- On-chip differential line driver
- Standalone or software controlled configuration
- Core and driver supply: +5 V
- Digital I/O supply: +2.7 V to +5 V
- Packaging: 28-lead TSSOP

DIT4096 Software Module Block Diagram

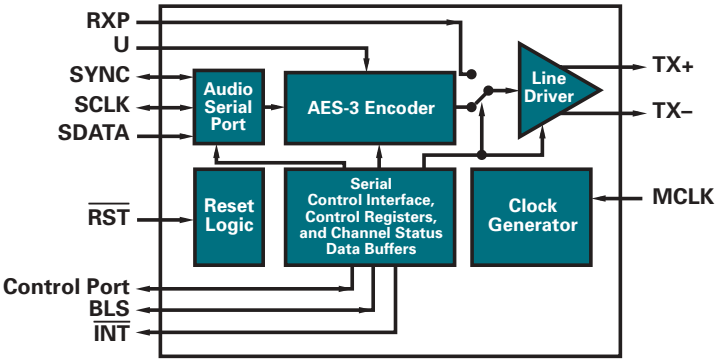

Applications

- Broadcast studio equipment
- Digital mixing consoles
- Effects processors

DIGITAL INTERFACE RECEIVER FOR S/PDIF AND AES-3 APPLICATIONS

DIR1703

Get samples and datasheets at: www.ti.com/sc/device/dir1703

The DIR1703 is a digital audio interface receiver (DIR) that receives and decodes audio data up to 96 kHz according to the AES/EBU, IEC958, S/PDIF and EIAJCP340/1201 consumer and professional format interface standards. In addition to its high sample rate, the DIR1703 has low jitter clock recovery using the patented Sampling Period Adaptive Controlled Tracking (SpAct™) system, which provides maximum quality and performance.

Key Features

- Supports sampling frequencies up to 96 kHz
- Low jitter system clock output: 75 ps
- PLL or crystal oscillator operation
- Outputs for channel status, user data, and flag signals
- Single +3.3-V power supply
- Packaging: 28-lead SSOP

DIR1703 Block Diagram

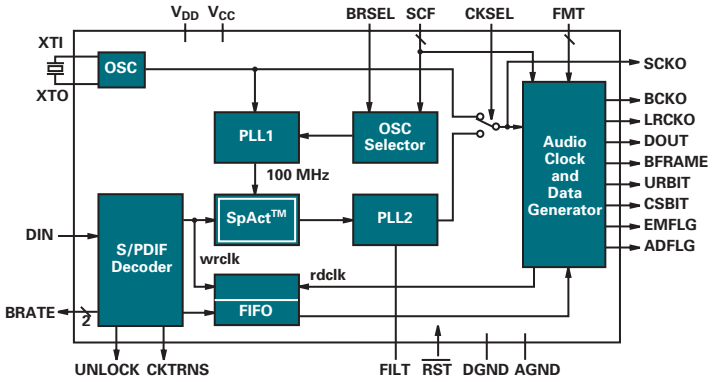

Applications

- AV receivers
- MD players
- DAC units

DATA CONVERTERS

Device	Description	Resolution (bits) max)	Dynamic Range (dB)	Sampling Rate (kHz) max	Configuration	Audio Data Format	Power Supply (V)	Package	Price[1]
DACs									
PCM1741	Low-Cost Audio DAC w/Volume Control	24	98	96	Stereo	Normal, I²S	+3.3	SSOP-16	$1.46
PCM1742	Low-Cost Audio DAC w/Volume Control	24	100	192	Stereo	Normal, I²S	+3.3 and +5	SSOP-16	$1.62
PCM1742K	Low-Cost Audio DAC w/Volume Control	24	105	192	Stereo	Normal, I²S	+3.3 and +5	SSOP-16	$1.82
PCM1748	Low-Cost Audio DAC w/Volume Control	24	100	96	Stereo	Normal, I²S	+3.3 and +5	SSOP-16	$1.47
PCM1748K	Low-Cost Audio DAC w/Volume Control	24	105	96	Stereo	Normal, I²S	+3.3 and +5	SSOP-16	$1.67
PCM1716/28	CMOS, Multilevel ΔΣ w/Volume Control	24	106	96	Stereo	Normal, I²S	+5	SSOP-28	$2.99
PCM1737/39	CMOS, Multilevel ΔΣ w/Volume Control	24	106	192	Stereo	Normal, I²S	+3.3 and +5	SSOP-28	$3.51
PCM1720	CMOS, Multilevel ΔΣ w/Volume Control	24	96	96	Stereo	Normal, I²S	+5	SSOP-20	$1.85
PCM1717/18	Stereo Audio DAC w/ Wide Supply Range	18	96	48	Stereo	Normal, I²S	+2.7 to +5.5	SSOP-20	$3.21
PCM1719	Stereo Audio DAC w/ Headphone Amplifier	18	96	48	Stereo	Normal, I²S	+5	SSOP-28	$4.20
PCM1723	W/int. PLL, generate DAD/MPEG clocks	24	94	96	Stereo	Normal, I²S	+5	SSOP-24	$2.45
PCM1727	W/int. Dual-PLL, for DAD/MPEG systems	24	92	96	Stereo	Normal, I²S	+5	SSOP-24	$2.97
PCM1740	W/internal VCXO and PLL	24	94	96	Stereo	Normal, I²S	+5	SSOP-24	$2.97
PCM1732	DAC w/ HDCD Filter	24	104	96	Stereo	Normal, I²S	+5	SO-28	$5.33
PCM1725	Low-Cost Audio DAC	16	95	96	Stereo	Normal, I²S	+5	SO-14	$1.26
PCM1733	Low-Cost Audio DAC	18	95	96	Stereo	Normal, I²S	+5	SO-14	$1.26
PCM1744	Low-Cost Audio DAC	24	95	96	Stereo	I²S	+5	SO-14	$1.26
DSD1702	PCM/DSD Compatible DAC	24	106	192	Stereo	Normal, I²S, DSD	+3.3 and +5	SSOP-20	$2.47
High-Performance DACs									
DSD1700	Mono Channel DSD DAC		110		Mono	DSD	+5	SSOP-28	$9.95
PCM1704	BiCMOS, Sign Magnitude	24	112	768	Mono	Serial Latched	±5	SOIC-20	$12.95
PCM1702P/U	BiCMOS, Sign Magnitude	20	110	768	Mono	Serial Latched	±5	DIP-16/SOP-20	$11.78
PCM1710	CMOS, Multilevel ΔΣ	20	110	48	Stereo	Normal, I²S	±5	SOIC-28	$4.00
PCM1738/30	Advanced Segment	24	117	192	Stereo	Normal, I²S, DSD	+3.3 and +5	SSOP-28	$4.95
PCM1791	Advanced Segment	24	112	192	Stereo	Normal, I²S	+3.3 and +5	SSOP-28	$2.00
PCM1792	High-Performance Audio DAC	24	132 (Mono Mode)	192	Stereo	Standard, I²S, Left Justified	+3.3 and +5	SSOP-28	$13.00
PCM4104	High-Performance Audio DAC	24	117	192	4 ch	Left Justified, Right Justified, I²S, TDM	+3.3 and +5	48-lead TQFP	TBD
Multichannel DACs									
PCM1608	Highly Integrated 8-ch Audio DAC	24	100	192	8ch	Normal, I²S	+3.3 and +5	LQFP-48	$4.10
PCM1608K	CMOS, Multilevel ΔΣ	24	105	192	8ch	Normal, I²S	+3.3 and +5	LQFP-48	$4.66
PCM1606	Low Cost CMOS, Multilevel ΔΣ	24	103	192	6ch	Normal, I²S	+5	SSOP-20	$2.48
PCM1605	CMOS, Multilevel ΔΣ	24	105	192	6ch	Normal, I²S	+3.3 and +5	MQFP-48	$4.35
PCM1604	CMOS, Multilevel ΔΣ	24	105	192	6ch	Normal, I²S	+3.3 and +5	LQFP-48	$4.35
PCM1602	Low-Cost CMOS, Multilevel ΔΣ	24	100	192	6ch	Normal, I²S	+3.3 and +5	LQFP-48	$3.09
PCM1602K	Low-Cost CMOS, Multilevel ΔΣ	24	105	192	6ch	Normal, I²S	+3.3 and +5	LQFP-48	$3.49
PCM1601	CMOS, Multilevel ΔΣ	24	105	96	6ch	Normal, I²S	+3.3 and +5	MQFP-48	$3.95
PCM1600	CMOS, Multilevel ΔΣ	24	105	96	6ch	Normal, I²S	+3.3 and +5	LQFP-48	$3.95
DSD1608	Enhanced Multiformat ΔΣ DAC	24	108	192	8ch	Normal, I²S, DSD	+3.3 and +5	TQFP-52	$5.68
ADCs									
PCM1804	ΔΣ Audio ADC	24	110	192	Stereo	Normal, I²S, DSD	3.3 and +5	SSOP-28	$4.95
PCM1802	ΔΣ Audio ADC	24	100	96	Stereo	Normal, I²S	3.3 and +5	SSOP-20	$3.95
PCM1800	CMOS, Multilevel DS	20	95	48	Stereo	Normal, I²S	+5	SSOP-24	$2.98
PCM1801	Low-Cost Audio ADC	16	93	48	Stereo	Normal, I²S	+5	SO-14	$2.27
PCM4202	High-Performance Audio ADC	24	118	192	Stereo	I²S, DSD	+3.3 and +5	48-lead TQFP	TBD
CODECs									
PCM3000/1	Stereo Audio CODEC	18	96	48	Stereo	Normal, I²S	+5	SSOP-28	$3.27
PCM3002/03	Low-Power, CODEC	20	94	48	Stereo	Normal,I²S	+2.7 to 3.6	SSOP-24	$3.27
PCM3006	Stereo Audio CODEC	16	93	48	Stereo	Normal	+2.7 to 3.6	SSOP-24	$3.27
PCM3500/1	Voice/Modem Mono CODEC	16	88	26	Mono	DSP	+2.7 to 3.6	SSOP-24	$2.49
PCM3010	High-Performance Stereo CODEC	24	103	96/192	Stereo	Left Justified, I²S, Right Justified	+3.3 and +5	SSOP-24	$2.99

[1] *Suggested resale price in U.S. dollars in quantities of 1,000. Preview devices are listed in blue. New devices are listed in red.*

DATA CONVERTERS (continued)

Device	Description	Resolution (bits) max	Dynamic Range (dB)	Sampling Rate (kHz) max	Configuration	Audio Data Format	Power Supply (V)	Package	Price[2]
Support Products									
DF1704	Digital Interpolation Filter	24	N/A	96	Stereo	Normal, I2S	+5	SSOP-28	$10.07
DF1706	Digital Interpolatioin Filter	24	N/A	192	Stereo	Normal, I2S	+3.3	SSOP-28	$11.08
Device	**Description**		**Jitter (ps)**	**Sampling Rate (kHz) max**		**Audio Data Format**	**Power Supply (V)**	**Package**	**Price[2]**
DIR1701	Digital Audio Interface Receiver		81	96			+3.3	SSOP-28	$1.78
DIR1703	Digital Audio Interface Receiver		75	96			+3.3	SSOP-28	$1.78
PLLs									
PLL1700	Multi-Clock Generator		150	96			+3.3 or +5	SSOP-20	$1.97
PLL1705	Dual PLL Multi-Clock Generator		50	96		Parallel Control	+3.3	SSOP-20	$1.20
PLL1706	Dual PLL Multi-Clock Generator		50	96		Serial Control	+3.3	SSOP-20	$1.20

ULTRA-LOW POWER STEREO PORTABLE AUDIO CONVERTERS CODECS

Device Name	Description	Power Dissipation (mW)	DAC SNR(dB)	ADC SNR(dB)	Sampling Rate (max) (kHz)	Resolution max) (Bits)	Power Supply (V)	Package	Price[2]
TLV320AIC23	Low Power Codec w/Headphone Amp	59	100	90	96	24	1.5 to 3.3	SSOP-28	$3.19
PCM3008	Low Power Codec	32	92	88	48	16	2.1 to 3.6	SSOP-28	$2.99
DACs									
TLV320DAC23	Low Power DAC w/Headphone Amp	23	100	N/A	96	24	1.5 to 3.3	SSOP-28	$1.90
PCM1770/1	Low Power DAC w/Headphone Amp	6.5	98	N/A	48	24	1.6 to 3.6	TSSOP-16 or VQFN-20	$1.95
PCM1772/3	Low Power DAC w/Line Amp	6.5	98	N/A	48	24	1.6 to 3.6	TSSOP-16 or VQFN-20	$1.95

DIGITAL AUDIO PWM PROCESSORS

Device	Channels	Sample Frequencies	Dynamic Range	THD+N (%, system performance)	Bits	Package	Price[2]
TAS5026	6	32 to 192	96	<0.08	16, 20, 24	PQFP-64	$7.27
TAS5036	6	32 to 192	100	<0.08	16, 20, 24	PQFP-80	$13.90
TAS5001	2	32 to 96	96	<0.08	16, 20, 24	PQFP-48	$2.53
TAS5010	2	32 to 192	96	<0.08	16, 20, 24	PQFP-48	$3.17
TAS5012	2	32 to 192	102	<0.08	16, 20, 24	PQFP-48	$5.89
TAS5015[1]	2	32 to 192	110	<0.01	16, 20, 24	PQFP-48	$25.00

DIGITAL AMPLIFIER POWER STAGES

Device	Power	Channels	Sample Frequencies	Dynamic Range	THD+N (% system performance)	Package	Price[2]
TAS5112	50 W (6 Ω)	2	32 to 192	102	<0.1	56 PowerPAD	See Web
TAS5182	100 W (6 Ω)	2	32 to 192	102	<0.1	56 PowerPAD	See Web
TAS5111	70 W (4 Ω)	1	32 to 192	102	<0.1	32 PowerPAD, 36 PSOP	See Web
TAS5110	50 W (4 Ω)	1	32 to 192	93	<0.08	32 PowerPAD	$3.19
TAS5100	50 W (6 Ω)	1	32 to 192	93	<0.08	32 PowerPAD	$3.15
TAS5101	50 W (6 Ω)	1	32 to 192	94	<0.1	32 PowerPAD	$3.44

DIGITAL AUDIO PROCESSORS

Device	MIPs	Processing Channels	Processing bits/ Accumulator	I/O Resolution	Codec Performance	Bi-quads per Channel	Compression/ Limiting	Loudness	Package	Price[2]
TAS3103	540	3	48/76	16 to 32	N/A	20	Yes	Yes	PSOP 32	$3.95
TAS3001	80	2	32/56	16 to 24	N/A	6	No	No	PSOP-28	$1.69
TAS3002	100	2	32/56	16 to 24	100 dB	7	Yes	Yes	PQFP-48	$3.36

[1] *Requires equibit license* [2] *Suggested resale price in U.S. dollars in quantities of 1,000.* *Preview devices are listed in blue.* *New devices are listed in red.*

AUDIO POWER AMPLIFIERS

Device	Stereo/Mono Speaker/ Drive	Stereo/Mono Headphone Drive	Output Power (W)	V_{CC}/V_{DD} (min) (V)	V_{CC}/V_{DD} (max) (V)	THD+N @ 1kHz (%)	PSRR (dB)	IQ per Channel (typ) (mA)	ISD (uA)	Input MUX	Depop	Mute	Internal Gain	DC Volume Control	Digital Volume Control	Price[3]
TPA3001D1	M		20	8	18	0.12	73	8.0	1		*		*			$2.82
TPA3002D2	S		9	8.5	14	0.05	70	8	10		*			*		$3.49
TPA032D02	S		10	8	14	0.5	40	12.5	20			*				$3.45
TPA032D03	M	S	10	8	14	0.5	40	12.5	20			*				$3.27
TPA032D04	S	S	10	8	14	0.5	40	12.5	20			*				$3.60
TPA1517	S		6	9.5	18	10	65	22.5	7			*				$0.79
TPA0172	S	S	2	4.5	5.5	0.15	75	4.0	15	*	*	*			*	$2.51
TPA0211	M	M	2	2.5	5.5	0.2	75	4.0	1		*					$0.67
TPA0212	S	S	2	4.5	5.5	0.75	77	3.0	150	*	*		*			$1.01
TPA0213	M	S	2	2.5	5.5	0.2	75	3.6	1	*	*					$1.09
TPA0222	S	S	2	4.5	5.5	0.5	77	9.0	150	*	*		*			$1.01
TPA0223	M	S	2	2.5	5.5	0.2	75	10.0	1	*	*					$1.09
TPA0232	S	S	2	4.5	5.5	0.4	67	5.0	150	*	*			*		$1.50
TPA0233	M	S	2	2.5	5.5	0.2	75	3.3	1	*	*					$1.09
TPA0242	S	S	2	4.5	5.5	0.22	67	10.0	150	*	*			*		$1.50
TPA0243	M	S	2	2.5	5.5	0.2	75	9.0	1	*	*					$1.09
TPA0252	S	S	2	4.5	5.5	0.3	67	4.5	150	*	*				*	$1.69
TPA6010A4	S	S	2	4.5	5.5	0.5	67	6.0	60	*	*		*			$2.14
TPA6011A4	S	S	2	4.0	5.5	N/A	70	3.8	1	*	*				*	$1.41
TPA6017A2	S		2	4.5	5.5	0.75	77	3.0	150		*		*			$1.21
TPA2000D1	M		2	2.7	5.5	0.04	77	4.0	0.05		*		*			$0.99
TPA2000D2	S		2	4.5	5.5	0.5	77	4.0	1		*		*			$1.34
TPA2000D4	S	S	2	3.7	5.5	0.3	70	4.5	0.05		*		*			$1.29
TPA6203A1	M		1.25	2.5	5.5	0.06	90	1.7	0.01		*					$0.45
TPA0253	M	S	1	2.5	5.5	0.2	75	2.7	1		*					$0.94
TPA2001D1	M		1	2.7	5.5	0.4	72	4.0	0.05		*		*			$0.70
TPA2001D2	S		1	4.5	5.5	0.5	77	4.0	1		*		*			$1.14
TPA2005D1	M		1.1	2.5	5.5	0.2	80	4.0	1		*					$0.49
TPA711	M	M	0.7	2.5	5.5	0.2	85	1.25	7		*					$0.41
TPA721	M		0.7	2.5	5.5	0.2	85	1.25	7		*					$0.41
TPA731	M		0.7	2.5	5.5	0.2	78	1.25	0.0015							$0.41
TPA741	M		0.7	2.5	5.5	0.2	85	1.35	7		*					$0.41
TPA751	M		0.7	2.5	5.5	0.2	78	1.25	0.0015							$0.41
TPA301	M		0.35	2.5	5.5	0.3	78	0.7	0.15							$0.29
TPA311	M	M	0.35	2.5	5.5	0.3	78	0.7	7		*					$0.29
TPA321	M		0.35	2.5	5.5	0.3	78	0.7	0.15							$0.29
TPA6110A2		S	0.15	2.5	5.5	0.03	83	0.75	10			*				$0.39
TPA6111A2		S	0.15	2.5	5.5	0.03	83	0.75	1		*					$0.29
TPA6112A2		S	0.15	2.5	5.5	0.03	83	0.75	10		*					$0.29
TPA152		S	0.075	4.5	5.5	0.02	81	2.8	N/A		*	*				$0.50
TPA6100A2		S	0.05	1.6	3.6	0.2	72	0.38	0.05		*					$0.33
TPA6101A2		S	0.05	1.6	3.6	0.4	72	0.32	0.05		*					$0.33
TPA6102A2		S	0.05	1.6	3.6	0.4	72	0.32	0.05		*					$0.33

[1]PG = PowerGood, EN = Active High Enable, /EN = Active Low Enable, SVS = Supply Voltage Supervisor *[2]C = Ceramic, T = Tantalum, No Cap = Capacitor Free LDO* *[3]Suggested resale price in U.S. dollars in quantities of 1,000.*

Preview devices are listed in blue. New devices are listed in red.

AMPLIFIERS

Device	Description	Channels	Shut-down	Vs (min) (V)	Vs (max) (V)	Iq per channel (max)(mA)	GBW (typ) (MHz)	Slew Rate (typ)(V/us)	Vio (25C) (mV) Max	Offset Drift (uV/C) typ	Iib (max) (pA)	CMRR (min) (dB)	Vn @ 1kHz (typ) (nV/√Hz)	Single Supply	Rail to Rail	Packages
General Purpose Op Amps																
NE5534/A NE5532/A	Low noise op amp	1,2	n	10	30	8	10	13, 9	4	-	800000	70	4, 5	n	n	PDIP, SOIC, SOP
TLV236x	High-perf., low-volt. op amp	1,2	n	2	5	2.5	7	3	6	-	150000	85	8	n	Out	PDIP, SOT23, SOIC, SOP, TSSOP
TL347x	High slew rate op amp	2,4	n	4	36	4.5	4	13	10	10	500000	65	49	y	n	PDIP, SOIC
RC4558	General purpose op amp	2	n	10	30	2.8	3	1.7	6	-	500000	70	8	n	n	PDIP, SOIC, SOP, TSSOP

Device	Description	Supply Voltage (V)	THD+N (%)	Slew Rate (V/µs)	GBW (MHz)	Single, Dual, Quad	Package	Price[3]
Audio Op Amps								
OPA343	CMOS, Single Supply Op Amp	+2.5 to +5.5	0.0007	6	5.5	S, D, Q	SO, MSOP, SSOP, SOT-23	$0.57
OPA353	High Speed, CMOS Op Amp	+2.7 to +5.5	0.0005	22	44	S, D, Q	DIP, SO, MSOP, SSOP	$0.97
OPA604	FET, Audio Op Amp	±4.5 to ±24	0.0003	25	20	S, D	DIP, SO	0.90
OPA134	FET, Audio Op Amp	±2.5 to ±18	0.00008	20	8	S, D, Q	DIP, SO	0.88
OPA227, OPA228	Low Noise Op Amp	±2.5 to ±18	0.00005	2.3	8	S, D, Q	DIP, SO	1.00
OPA627, OPA637	Ultra Audio Difet® Op Amp	±4.5 to ±18	0.00003	55	16	S	DIP, SO	$9.52
OPA642, OPA643	High Speed Op Amp	±4.5 to ±5.5	—	380/1000	450	S	DIP, SO	3.75
Line Drivers/Receivers								
DRV134, DRV135	Professional Line Transmitter	±4.5 to ±18	0.0005	12	1.5	S	DIP, SO	$1.82
INA134	Professional Line Receiver, G = 1	±4 to ±18	0.0005	14	3.1	S, D	DIP, SO	$1.00
INA137	Professional Line Receiver, G = 1/2 or 2	±4 to ±18	0.0005	14	4	S, D	DIP, SO	$1.00
Microphone Preamps								
INA103	Low Noise Microphone Preamp	±9 to ±25	0.0009	15	6	S	DIP, SO	$4.65
INA163	Low Noise Microphone Preamp	±4.5 to ±18	0.002	15	8	S	SO	$2.35
INA217	Low Noise Microphone Preamp	±4.5 to ±18	0.004	15	8	S	DIP, SO	$2.35

AUDIO VOLUME CONTROLS

Device	Description	Dynamic Range (dB)	THD+N at 1 kHz (%)	Crosstalk at 1 kHz (dBFS)	Power Supply (V)	Voltage Swing (V_{p-p})	Package
PGA2310UA, PA	BiCMOS, stereo audio volume control	120	0.0004	-126	±15	27	SOL-16, DIP-16
PGA2311UA, PA	CMOS, stereo audio volume control	120	0.0002	-130	±5	7.5	SOL-16, DIP-16
PGA2311U, P	CMOS, stereo audio volume control	120	0.0004	-130	±5	7.5	SOL-16, DIP-16
PGA4311UA	CMOS, 4ch audio volume control	120	0.0002	-130	±5	7.5	SOP-28
PGA4311U	CMOS, 4ch audio volume control	120	0.0004	-130	±5	7.5	OP-28

[1]PG = PowerGood, EN = Active High Enable, /EN = Active Low Enable, SVS = Supply Voltage Supervisor *[2]C = Ceramic, T = Tantalum, No Cap = Capacitor Free LDO* *[3]Suggested resale price in U.S. dollars in quantities of 1,000.*

Preview devices are listed in blue. New devices are listed in red.

LOW DROPOUT REGULATORS (LDOs)

Device	I_O (mA)	V_{DO} @ I_O (mV)	I_q @ I_O (µA)	Output Options: Negative Out	Output Options: Voltage (V)	Output Options: Adj.	Min V_{IN}	Max V_{IN}	Accuracy (%)	Packages: SC70	SOT23	MSOP	SO8	SOT223	PWP	TO263	TO220	PW	DDPAK	Features[1]	C_O[2]	Comments	Price[3]
TPS797xx	10	105	1.2		1.8, 3, 3.3		1.8	5.5	4	*										PG	0.47 µF C	MSP430; lowest I_q	0.32
TPS715xx	50	415	3.2		2.5, 3.3	*	2.5	24	4	*											0.47 µF C	V_{IN} up to 24 V	0.32
TPS770xx	50	35	17		1.2, 1.5, 1.8, 2.5, 2.7, 2.8, 3, 3.3, 5	*	2.7	10	3		*									/EN	4.7 µF T	Low I_q	0.34
TPS790xx	50	35	17		1.5, 1.8, 2.5, 2.8, 3		2.7	10	3		*									/EN	4.7 µF T	Low noise, low I_q	0.34
TPS722xx	50	50	550		1.5, 1.6, 1.8	*	1.8	5.5	3		*									EN	0.1 µF C	Low noise, V_{IN} down to 1.8 V	0.39
TPS760xx	50	120	850		3, 3.2, 3.3, 3.8, 5.0		3.2	16	1		*									EN	2.2 µF T	Bipolar, low cost	0.34
TPS769xx	100	70	17		1.2, 1.5, 1.8, 2.5, 2.7, 2.8, 3, 3.3, 5	*	2.7	10	3		*									/EN	4.7 µF T	Low cost	0.29
TPS789xx	100	115	17		1.5, 1.8, 2.5, 2.8, 3		2.7	10	3		*									/EN	4.7 µF T	Low cost + low noise	0.29
TPS76201	100	35	23			*	2.7	10	3		*									/EN	4.7 µF T	V_O adj. down to 0.7 V	0.35
REG101	100	60	500		2.5, 2.8, 2.85, 3, 3.3, 5	*	1.8	10	2		*		*							EN	No Cap	Low noise	0.88
TPS791xx	100	38	170		1.8, 3.3, 4.7	*	2.7	5.5	2		*									/EN	1 µF C	RF low noise, high PSRR	0.38
TPS792xx	100	38	170		2.5, 2.8, 3	*	2.7	5.5	2		*									EN	1 µF C	RF low noise, high PSRR	0.38
TPS761xx	100	170	2600		3, 3.2, 3.3, 3.8, 5		3.2	16	1		*									EN	2.2 µF T	Bipolar, low cost	0.35
TPS763xx	150	300	85		1.6, 1.8, 2.5, 2.7, 2.8, 3, 3.3, 3.8, 5	*	2.7	10	3		*									EN	4.7 µF T	Low cost	0.29
TPS764xx	150	300	85		2.5, 2.7, 2.8, 3, 3.3		2.7	10	3		*									EN	4.7 µF T	Low cost + low noise	0.29
TPS765xx	150	85	35		1.5, 1.8, 2.5, 2.7, 2.8, 3, 3.3, 5	*	2.7	10	3				*							/EN, PG	4.7 µF T	Low I_q	0.48
TPS771xx	150	115	92		1.5, 1.8, 2.7, 2.8, 3.3, 5	*	2.7	10	2				*							/EN, SVS	10 µF C	Low noise	0.56
TPS772xx	150	115	92		1.5, 1.8, 2.7, 2.8, 3.3, 5	*	2.7	10	2				*							/EN, PG	10 µF C	Low noise	0.54
TPS788xx	150	150	17		2.5, 3.3		2.7	10	3		*									/EN	4.7 µF T	USB inrush control	0.36
TPS721xx	150	150	85		1.5, 1.6, 1.8	*	1.8	5.5	3		*									EN	0.1 µF C	Low noise V_{IN} down to 1.8 V	0.39
TL750Lxx	150	600	10 mA		5		6	26	5				*				*				10 µF T	60-V load dump	0.63
TL751Lxx	150	600	10 mA		5		6	26	5				*							/EN	10 µF T	60-V load dump	0.88
TPS793xx	200	100	170		1.8, 2.5, 2.8, 2.85, 3, 3.3, 4.75	*	2.7	5.5	2		*	*		*						EN	2.2 µF C	RF low noise, high PSRR	0.40
TPS794xx	250	90	170		1.8, 2.5, 2.8, 3.0, 3.3	*	2.7	5.5	2			*		*						EN	2.2 µF C	RF low noise, high PSRR	0.62
TPS766xx	250	140	35		1.5, 1.8, 2.5, 2.7, 2.8, 3, 3.3, 5	*	2.7	10	3				*							/EN, PG	4.7 µF T	Low I_q, low noise	0.61
TPS773xx	250	200	92		1.5, 1.6, 1.8, 2.7, 2.8, 3.3, 5	*	2.7	10	2			*								/EN, SVS	10 µF C	Low noise	0.65
TPS774xx	250	200	92		1.5, 1.8, 2.7, 2.8, 3.3, 5	*	2.7	10	2			*								/EN, PG	10 µF C	Low noise	0.65
TPS779xx	250	200	92		1.8, 2.5, 3	*	2.7	10	2			*								EN, SVS	10 µF C	Low noise	0.65
TPPM0303	250	1000	250		3.3		3.0	5.5	5				*								4.7 µF T	Smart LDO (V_{AUX})	1.07
REG102	250	150	600		2.5, 2.8, 2.85, 3, 3.3, 5	*	1.8	10	2		*		*	*						EN	No Cap	Capacitor free, DMOS	1.00
REG113	400	250	850		2.5, 2.85, 3, 3.3, 5		1.8	10	2		*	*								EN	No Cap	Capacitor free, DMOS	1.04
TPPM0301	400	1000	250		3.3		3.0	5.5	5				*								4.7 µF T	Smart LDO (V_{AUX})	1.60
TPPM0302	400	1000	250		3.3		3.0	5.5	5			*								PG	4.7 µF T	Smart LDO (V_{AUX})	1.60
TPS795xx	500	100	265		1.6, 1.8, 2.5, 3.0, 3.3	*	2.7	5.5	3					*						EN	2.2 µF C	RF low noise, high PSRR	0.95
TPS775xx	500	169	85		1.5, 1.6, 1.8, 2.5, 3.3	*	2.7	10	2				*		*					SVS	10 µF T	Fast transient response	0.87
TPS776xx	500	169	85		1.5, 1.8, 2.5, 2.8, 3.3	*	2.7	10	2				*		*					PG	10 µF T	Fast transient response	0.83
UCCx84-x	500	200	280	-12, -5		*	-15	-5.2	3				*							/EN	4.7 µF T	Negative output	1.86
REG103	500	115	1000		2.5, 2.7, 3, 3.3, 5	*	2.1	15	2				*	*		*			*	EN, PG	No Cap	Capacitor free, DMOS	2.00
TPS71xx	500	160	285		3.3, 4.85, 5	*	2.5	10	2				*					*		PG	10 µF T	For 4.85-V, 5-V support	1.17
TPS73xx	500	165	340		2.5, 3, 3.3, 4.85, 5	*	2.5	10	2				*					*		SVS	10 µF T	For 4.85-V, 5-V support	0.99
TLV2217-33	500	500	19		3.3		3.9	12	1								*	*			22 µF T	Bipolar, low cost	0.56
TPS777xx	750	260	85		1.5, 1.8, 2.5, 3.3	*	2.7	10	2				*		*					/EN,SVS	10 µF T	Fast transient response	0.96

[1]PG = PowerGood, EN = Active High Enable, /EN = Active Low Enable, SVS = Supply Voltage Supervisor [2]C = Ceramic, T = Tantalum, No Cap = Capacitor Free LDO [3]Suggested resale price in U.S. dollars in quantities of 1,000.

Preview devices are listed in blue. New devices are listed in red.

LOW DROPOUT REGULATORS (LDOs)

Device	I_O (mA)	V_{DO} @ I_O (mV)	I_q @ I_O (µA)	Output Options: Negative Out	Output Options: Voltage (V)	Output Options: Adj.	Min V_{IN}	Max V_{IN}	Accuracy (%)	Packages: SC70	SOT23	MSOP	SO8	SOT223	PWP	TO263	TO220	PW	DDPAK	Features[1]	C_O[2]	Comments	Price[3]
TPS778xx	750	260	85		1.5, 1.8, 2.5, 3.3	*	2.7	10	2			*		*						/EN,PG	10 µF T	Fast transient response	0.92
TPS725xx	1000	170	210		1.5, 1.6, 1.8, 2.5	*	1.8	5.5	2				*	*		*			*	EN, SVS	No Cap	V_{IN} down to 1.8 V, low noise	1.04
TPS726xx	1000	170	210		1.5, 1.6, 1.8, 2.5		1.8	5.5	2					*		*			*	EN, SVS	No Cap	V_{IN} down to 1.8 V, low noise	1.04
TPS796xx	1000	250	265		1.8, 2.5, 2.8, 3.0, 3.3	*	2.7	5.5	3					*		*			*	EN	2.2 µF C	RF low noise, high PSRR	1.04
TPS767xx	1000	230	85		1.5, 1.8, 2.5, 2.7, 2.8, 3, 3.3, 5	*	2.7	10	2				*		*					SVS	10 µF T	Fast transient response	1.04
TPS768xx	1000	230	85		1.5, 1.8, 2.5, 2.7, 2.8, 3, 3.3, 5	*	2.7	10	2				*		*					PG	10 µF T	Fast transient response	1.00
UCCx81-x	1000	500	400		3.3, 5	*	2.7	9	2				*							EN	2.2 µF T	Reverse leakage	1.80
REG104	1000	230	1700		2.5, 2.7, 3, 3.3, 5	*	2.1	15	2					*		*			*	EN	No Cap	Capacitor free, DMOS	2.22
TPS786xx	1500	390	260		1.8, 2.5, 2.8, 3.0, 3.3	*	2.7	5.5	3					*		*			*	EN	2.2 µF C	RF low noise, high PSRR	1.28
TPS751xx	1500	160	75		1.5, 1.8, 2.5, 3.3	*	2.7	5.0	2						*					/EN, PG	47 µF T	Fast transient response	1.52
TPS753xx	1500	160	75		1.5, 1.8, 2.5, 3.3	*	2.7	5.0	2						*					/EN, SVS	47 µF T	Fast transient response	1.61
TPS752xx	2000	210	75		1.5, 1.8, 2.5, 3.3	*	2.7	5.0	2						*					/EN, SVS	47 µF T	Fast transient response	1.71
TPS754xx	2000	210	75		1.5, 1.8, 2.5, 3.3	*	2.7	5.0	2						*					/EN, PG	47 µF T	Fast transient response	1.65
UCx82-x	3000	350	18 mA		1.5, 2.1, 2.5	*	1.5	7.5	3							*	*		*		100 µF T	Fast LDO with reverse leak	2.57
UCCx83-x	3000	700	400		3.3, 5	*	3.45	9	2							*	*		*	/EN	47 µF T	Reverse leakage protection	2.57
TPS757xx	3000	150	125		1.5, 1.8, 2.5, 3.3	*	2.8	5.5	3							*	*		*	/EN, PG	47 µF T	Fast transient response	2.57
TPS758xx	3000	150	125		1.5, 1.8, 2.5, 3.3	*	2.8	5.5	3							*	*		*	/EN	47 µF T	Fast transient response	2.57
UCx85-x	5000	350	30 mA		1.5, 2.1, 2.5	*	1.5	7.5	3							*	*		*		100 µF T	Fast LDO with reverse leak	3.00
TPS755xx	5000	250	125		1.5, 1.8, 2.5, 3.3	*	2.8	5.5	3							*	*		*	/EN, PG	47 µF T	Fast transient response	2.83
TPS756xx	5000	250	125		1.5, 1.8, 2.5, 3.3	*	2.8	5.5	3							*	*		*	/EN	47 µF T	Fast transient response	2.83

[1]*PG = PowerGood, EN = Active High Enable, /EN = Active Low Enable, SVS = Supply Voltage Supervisor* [2]*C = Ceramic, T = Tantalum, No Cap = Capacitor Free LDO* [3]*Suggested resale price in U.S. dollars in quantities of 1,000.*

Preview devices are listed in blue. New devices are listed in red.

1394 INTEGRATED DEVICES

Device	Family/Name	Voltage (V)	Data Rate (Mbps)	FIFOs	Package	Price[1]	Notes
TSB43AA22	iOHCI-Lynx	3.3	up to 400	8	128-pin TQFP	$7.16	OHCI 1.0 compliant 1394 link layer controller and 1394a-2000 compliant 2-port PHY, 9K FIFO
TSB43AA82	iSphynx II	3.3	up to 400	4.7	176-pin BGA, 144-pin LQFP	$8.27	High-performance 1394 asynchronous link for peripherals including printers, scanners, storage instrumentation, and industrial applications. Integrated 2-port PHY with SBP2H/W acceleration, 3.3V, 4K FIFO, 8/16 host I/F SCSI-like DMA, programmable data I/F, 8/16-bit SCSI-like DMA, ATAPI
TSB43AA82A	iSphynx II	3.3	up to 400	4.7	144-pin LQFP	$8.27	High-performance 1394 asynchronous link for peripherals including printers, scanners, storage instrumentation, and industrial applications. Integrated 2-port PHY with SBP2H/W acceleration, 3.3V, 4K FIFO, 8/16 host I/F SCSI-like DMA, programmable data I/F, 8/16-bit SCSI-like DMA, ATAPI
TSB43AB21	iOHCI-Lynx	3.3	up to 400	9	128-pin TQFP	$4.32	OHCI 1.1 compliant 1394 link layer controller and 1394a-2000 compliant 1-, 2- and 3-port PHY, 9K FIFO
TSB43AB21A	iOHCI-Lynx	3.3	up to 400	9	128-pin TQFP	$4.32	OHCI 1.1, 1394a link layer controller integrated with 1394a, 400 Mbps, 1-port PHY
TSB43AB22	iOHCI-Lynx	3.3	up to 400	9	128-pin TQFP	$4.55	OHCI 1.1 compliant 1394 link layer controller and 1394a-2000 compliant 1-, 2- and 3-port PHY, 9K FIFO
TSB43AB22A	iOHCI-Lynx	3.3	up to 400	9	128-pin TQFP	$4.55	OHCI 1.1, 1394a link layer controller integrated with 1394a, 400 Mbps, 2-port PHY
TSB43AB23	iOHCI-Lynx	3.3	up to 400	9	128-pin TQFP	$4.90	OHCI 1.1 compliant 1394 link layer controller and 1394a-2000 compliant 1-, 2- and 3-port PHY, 9K FIFO
TSB43CA43A	iceLynx-Micro	3.3	up to 400	16.5	176-ball BGA	Call	iceLynx-micro-5C with streaming audio and content protection
TSB43CB43A	iceLynx-Micro	3.3	up to 400	16.5	176-pin QFP	Call	iceLynx Micro with streaming audio

1394 LINK LAYER CONTROLLERS

Device	Family/Name	Voltage (V)	Data Rate (Mbps)	FIFOs	Package	Price[1]	Notes
TSB12C01A		5	up to 100	2	100-pin LQFP	$11.75	High-performance 5-V link layer with 32-bit host I/F, 2K FIFOs
TSB12LV01B		3.3	up to 400	2	100-pin TQFP	$8.88	High-performance link layer with 32-bit I/F, may be cycle master, has 2KB FIFO. PHY link timing compliant with 1394a-2000 for data and control bus applications in backplane and cable
TSB12LV01B-EP		3.3	up to 400	2	100-pin TQFP	$17.64	High-performance link layer with 32-bit I/F, may be cycle master, has 2KB FIFO. PHY link timing compliant with 1394a-2000 for data and control bus applications in backplane and cable
TSB12LV21B	PCILynxII	3.3	up to 400	4	176-pin LQFP	$9.60	High-performance link for host or peripheral applications. 32-bit PCI I/F, 4K FIFO, handles asynch streaming and DV applications (not supported by Windows)
TSB12LV23		3.3	up to 400	9	100-pin LQFP	$3.92	OHCI 1.0-compliant 1394a-2000 link layer controller. 32-bit PCI I/F, 9K FIFO, pin-compatible w/TSB12LV22 with host I/F
TSB12LV26		3.3	up to 400	9	100-pin TQFP	$5.11	OHCI 1.0-compliant 1394a-2000 link layer controller. 32-bit PCI I/F, 9K FIFO, pin-compatible w/TSB12LV23
TSB12LV32	GP2Lynx	3.3	up to 400	4	100-pin LQFP	$12.77	1394a-2000-compliant link layer for camera, printer or scanner applications. 8-/16-bit host I/F, 2K FIFO, high-speed data I/F
TSB15LV01	CameraLynx	3.3	up to 400	0	80-pin TQFP	$4.78	Integrated 1394 link layer and camera ASIC. High-performance, cost-effective link layer for PC cameras
TSB42AA4		3.3	up to 400	8	128-pin TQFP	$9.20	High-performance link for MPEG2, DirecTV and DV applications. Supports 5C copy protection. 16/32-bit host I/F, 8K FIFO high-speed data I/F
TSB42AA9	StorageLynx	3.3	up to 400	0	100-pin TQFP	$7.81	High-performance link layer controller for ATA and ATAPI storage devices, such as HDD, CD ROM, CD-RW and DVD. StorageLynx acts as a bridge between the 1394 and ATA/ATAPI buses
TSB42AA9A	StorageLynx	3.3	up to 400	4	100-pin TQFP	$5.35	StorageLynx, Rev. A - high-performance 1394a 3.3-V link-layer controller for 1394 mass storage apps
TSB42AB4		3.3	up to 400	8	128-pin TQFP	$10.91	1394 link layer controller for consumer electronics applications, drop-in compatible with TSB42AA4 but does not include copy protection

1394 PHYSICAL LAYER CONTROLLERS

Device	Ports	Voltage (V)	Data Rate (Mbps)	Package	Price[1]	Notes
TSB14AA1	1	3.3	up to 100	48-pin TQFP	$5.90	IEEE 1394-1995, 3.3-V, 1-port, 50/100 Mbps, backplane PHY
TSB14C01A	1	5	up to 100	64-pin LQFP	$5.42	IEEE 1394-1995, 5-V, 1-port, 50/100 Mbps, backplane PHY
TSB41AB1	1	3.3	up to 400	48-pin HTQFP, 64-pin HTQFP	$2.03	IEEE 1394a one-port cable transceiver/arbiter
TSB41AB2	2	3.3	up to 400	64-pin HTQFP	$2.53	IEEE 1394a two-port cable transceiver/arbiter
TSB41AB3	3	3.3	up to 400	80-pin HTQFP	$2.98	IEEE 1394a three-port cable transceiver/arbiter
TSB41AB3-EP	3	3.3	up to 400	80-pin HTQFP	$8.77	IEEE 1394a three-port cable transceiver/aArbiter
TSB41LV04A	4	3.3	up to 400	80-pin HTQFP	$6.47	IEEE 1394a four-port cable transceiver/arbiter
TSB41LV06A	6	3.3	up to 400	100-pin HTQFP	$6.36	IEEE 1394a six-port cable transceiver/arbiter

USB HUB CONTROLLERS

Device	Speed	Ports	I^2C	Voltage (V)	Package	Price[1]	Notes
TUSB2036	Full (1.1)	2	No	3.3	32-pin LQFP	$1.24	2/3-port hub for USB w/optional serial EEPROM interface
TUSB2046B	Full (1.1)	4	No	3.3	32-pin LQFP	$1.29	4-port hub for the USB w/optional serial EEPROM interface supporting Win95/DOS mode
TUSB2077A	Full (1.1)	7	No	3.3	48-pin LQFP	$1.93	7-port USB hub w/optional serial EEPROM interface
TUSB2136	Full (1.1)	2	Yes	3.3	64-pin LQFP	$4.04	2-port hub with integrated general purpose function controller
TUSB5052	Full (1.1)	5	Yes	3.3	100-pin LQFP	$5.06	5-port hub with integrated bridge to two serial ports
TUSB5152	Full (1.1)	5	Yes	3.3	100-pin LQFP	$9.56	5-port hub with integrated bridge to IEEE 1284 port and two serial ports

USB PERIPHERALS

Device	Speed	Voltage (V)	Remote Wakeup	Package	Price[1]	Notes
TUSB3210	Full (1.1)	3.3	Yes	64-pin LQFP	$3.03	USB general-purpose device controller
TUSB3410	Full (1.1)	3.3	Yes	32-pin LQFP	$2.50	RS232/IrDA serial-to-USB converter
TUSB6250	Full (1.1), High (2.0)	3.3	Yes	80-pin TQFP	Call	USB 2.0 ATA/ATAPI bridge solution

[1] *Suggested resale price in U.S. dollars in quantities of 1,000.* *Preview devices are listed in blue.* *New devices are listed in red.*

EVALUATION MODULES (EVMs)

To order any of the following evaluation modules (EVMs), please call 1-800-477-8924, ext. 5800 in North America. To order from other regions, please contact the TI Product Information Center (see listings on page 2) or local TI distributor.

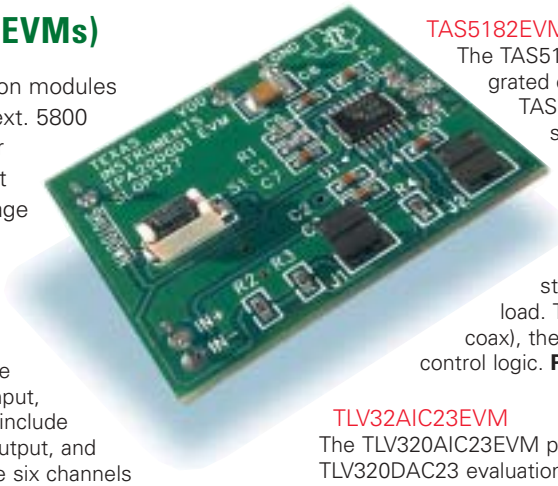

TAS3103EVM

Six channel audio systems can be implemented and fully evaluated using the TAS3103EVM. Input options include six analog channels, one S/PIF stereo input, and eight I²S channels. Output options include six analog channels, one S/PIF stereo output, and six I²S channels. Two TAS3103s provide six channels of processing. The EVM can serve as an I²S Master supplying all clocks, or as an I²S slave operating from clocks provided by the S/PDIF receiver or the I²S input header. An I²C port provides the means of programming the coefficients of both TAS3103s. **Price: $799**

TAS3002/4EVM (DA-REF105)

The TAS3002/4 EVM allows designers to evaluate and develop products based on the either the TAS3002 Digital Audio Processor with CODEC or the TAS3004 digital audio processor with Codec. These two devices are pin-for-pin compatible. However, the TAS3004 has an extra block of circuitry added to reformat the output of the ADC into a monaural configuration. Both devices contain a 32-bit processor that can perform EQ, VBT, DRCE, and other audio functions. It contains seven bi-quad filters that can be changed dynamically and GPI pins to access many of the functions of the device. **Price: $399**

TAS5101EVM (Preview)

The TAS5101 EVM allows designers to evaluate the performance of the TAS5101 single-ended digital amplifier. The evaluation module contains a TAS5010 Digital Modulator that accepts conventional digital audio input formats, such as IIS, Left-Justified and Right-Justified. On the EVM, these formats are programmed via resistors on the bottom of the PCB. The TAS5101 Single-Ended Amplifier is designed to provide 15 RMS into a 4-Ω load at 0 dB (full scale) digital input. For convenience, a DAVEQ-102 SPDIF to IIS converter module is offered as a companion board to the TAS5101EVM. **Price: $199**

TAS5112EVM (Preview)

The TAS5112EVM demonstrates TI digital audio integrated circuits: TAS5010 and TAS5112. The TAS5010 is a high-performance, 24-bit stereo digital modulator (PCM input and PWM output). The TAS5112 is a true digital 2 X 50-W integrated power output stage. The EVM provides SPDIF (optical and coax), I²S, and analog inputs from 32 kHZ to 192 kHz. It contains a TAS3002 digital audio processor that can be used for digital volume, tone filtering, loudness, and compression. **Price: $399**

TAS5182EVM (Preview)

The TAS5182EVM demonstrates TI digital audio integrated circuits: TAS5012 and TAS5182. The TAS5012 is a high performance 192 kHz, 24-bit stereo digital modulator. The TAS5182 is a true digital stereo output stage driver designed to drive external MOSFETs. The TAS5012 and TAS5182 — together with eight MOSFETs — demonstrate the complete conversion of a 3.3-V digital audio stream supplying 2 X 100 W power into 6-Ω load. The EVM provides SPDIF inputs (optical and coax), the TI DIR1703 SPDIF receiver, I²S input, and control logic. **Price: $499**

TLV32AIC23EVM

The TLV320AIC23EVM platform is useful for TLV320AIC23 and TLV320DAC23 evaluations. The provided software allows users to exercise the various modes and features of the AIC23 Codec and DAC23 audio DAC. **Price: $299**

TAS3001EVM

The TAS3001EVM allows designers to evaluate and develop products using the TAS3001 digital audio processor. The TAS3001 is a 32-bit audio processor that can perform EQ, VBT, DRC and other audio processing functions. It contains six bi-quads per channel; each can be changed dynamically. The EVM allows the full functionality of the TAS3001 to be evaluated. **Price: $499**

TAS5100EVM

TI's 30WX2, 24-bit digital amplifier solution can be fully evaluated using the TAS5100EVM. The EVM ships with the TAS5010 PWM processor but is footprint-compatible with the TAS5001 and TAS5012. The EVM has S/PDIF, I2S or analog input and can operate from 32 kHz to 192 kHz, 96 dB SNR, and 0.08% THD+N. It contains a bypass-able TAS3004 digital audio processor that can be used for digital volume, tone filtering, loudness and DRC. **Price: $499**

TLV320DAC23EVM

The TLV320AIC23EVM platform is useful for the TLV320AIC23 and the TLV320DAC23 device evaluations. The provided software allows users to exercise the various modes and features of the AIC23 Codec and DAC23 audio DAC. **Price: $299**

TUSB3200EVM

The TUSB3200EVM allows customers to evaluate the TUSB3200 for USB audio applications. The EVM includes an AC97 Codec and demonstrates full duplex audio capabilities. **Price: $499**

TUSB3200EVM2

The TUSB3200EVM2 is designed to allow development and evaluation of the TUSB3200 for multichannel applications. The TUSB3200 accepts USB data streams and generates output at the Codec port, I²C port, and/or GPIO port. A six-channel Codec is included on the EVM to provide six analog line level outputs that can be connected to amplified speakers. **Price: $499**

USER GUIDES

To access any of the following users guides or application reports, type the URL www-s.ti.com/sc/techlit/litnumber and replace lit-number with the number in parentheses.

TAS3001 EVM (SLAU060)
The TAS3001 EVM board demonstrates the operation of the digital equalization and the dramatic improvements that 32-bit digital audio signal processing can make on sound quality.

6-Channel TUSB3200EVM2 for the TUSB3200 USB Streaming Data Controller (SLAU062)
This users guide describes the setup and operation of the TUSB3200EVM2 platform. This PCB contains two main active parts: TUSB3200 STC (TI USB streaming controller) and crystal CS4228 Codec. This PCB is referred to as the TUSB3200EVM2 from this point on. Familiarity with emulator hardware and software is required and assumed throughout this users guide.

DA-REF105: TAS3002/TAS3004 Reference Design Board (SLEU004)
The TAS3004 reference board demonstrates the operation of the digital equalization and the dramatic improvements that 32-bit digital audio signal processing can make on the quality of sound.

Evaluation Module for the TLV320AIC23 Codec and the TLV320DAC23 Audio DAC (SLEU003)
This document covers the user software provided with the TLV320AIC23EVM board based on the TI TLV320AIC23 (AIC23) or the TLV320DAC23 (DAC23). Except where noted the AIC23 applies to both the TLV320AIC23 and the TLV320DAC23. The function, operation, and implementation of the software are described. A description of the TLV320AIC23 EVM boards connectors and jumpers is also provided, along with instructions on how to configure the board for use with the TLV320AIC23 EVM user software or as a stand-alone USB audio device. The TLV320AIC23 EVM platform is useful for the TLV320AIC23 and the TLV320DAC23 device evaluations. The provided software allows users to exercise the various modes and features of the AIC23 Codec and DAC23 audio DAC.

TUSB3200 EVM Development Platform for the TUSB3200 Universal Serial Bus Streaming Data Controller (SLAU059)
The TUSB3200 EVM was designed for use with additional hardware and software. The emulator hardware should consist of a PC card, an interface cable, and an emulator pod. The pod may or may not have an extension module in-cluded. These components may or may not be sold independently depending on the vendor. The emulator software should include everything required to run the hardware. If programming in C++ instead of assembly code is desired, then a C++ to assembly code compiler is also a nice tool to add to the shopping list. It is recommended to check the compiler and the emulator for compatibility before making a selection. A USB cable is required to interface the TUSB3200 EVM to the PC.

TUSB3200 USB with EQ 2-Channel Reference Design (SLAU063)
The USB interface is based on the Texas Instruments TUSB3200 universal serial bus device. The device includes a transceiver that supports 12 Mbps (full speed) data transfers. The TUSB3200 conforms to USB Specification Version 1.1 and USB Audio Class Specification 1.0. The USB receives isochronous audio and control data from the USB I/O connector. The USB separates the received digital audio data into separate left and right channels. The TUSB3200 sends the digital audio data to the TAS3001 digital equalizer function via the I 2 S port at one of the following sampling frequencies: 32 kHz, 44.1 kHz, or 48 kHz. The sampling frequency is defined only during initialization and can not change while the device is in normal operation. The TUSB3200 generates the control for the digital equalizer and the Codec. The TUSB3200 controls the circuit in the four functional modes: reset, initialization, mute, and operation.

APPLICATION REPORTS

Digital Audio Measurements (SLAA114)
To perform correct measurements on a true digital audio amplifier (TDAA), it is important to understand the characteristics of the device, especially in comparison with conventional linear amplifiers such as class-A and class-AB. This report provides an overview of TI's proprietary digital amplification technology and information about how measurements on TDAAs must be performed in order to obtain correct results.

System Design Considerations for True Digital Audio Power Amplifiers (SLAA117A)
This report describes the conversion of pulse-code-modulated (PCM) to pulse-width-modulated (PWM) signals using Texas Instruments TDAA modulation devices (TAS50xx) and signal amplification using Texas Instruments family of H-bridge output stages (TAS51xx). It includes a detailed discussion of power supply voltage requirements, output circuit filters, and thermal dissipation. An example stereo application shows how to select various components and demonstrates TDAA measurements and what to look for in the results.

I2C and the TAS3001C (SLEA001)
The TAS3001C stereo audio digital equalizer provides a serial control interface using the I^2C protocol. Since the TAS3001C is more complex than the typical serial EEPROM often found on an I^2C bus, designers must consider additional aspects of the I^2C specification. Methods of interfacing to the TAS3001C, applicable to a wide variety of I^2C masters, are discussed.

Solid State Voice Recorder Using Flash MSP430 (SLAA123)
The promise of cost-effective re-programmable MSP430 MCU systems has recently come to fruition with the integration of In-System Programmable (ISP) Flash memory. Firmware delivered just in time during manufacturing, updateable code in field-deployed systems, and the elimination of discrete EEPROMs are now design realities. This application report demonstrates the flexibility of in-system programmable Flash by implementing a solid state voice recorder.

TLC320AD77C Clock and Timing Issues (SLEA002)
The Texas Instruments TLC320AD77C stereo audio Codec requires a 3-ns separation in edges between MCLK and SCLK and an LRCLK phase stability of ±10 MCLKs over the duration that power is applied. This paper examines the source of these requirements and the impact they have on a design when using the Codec with the Texas Instruments TMS320C54x™ DSP and the Texas Instruments TUSB3200 USB controller.

To access all the latest audio application notes, visit www.ti.com/audioappnotes

APPLICATION NOTE EXCLUSIVE

TLV320AIC23 POWER ON/OFF "POPS"

By Fred J. Shipley, TI Digital Audio/Visual

Abstract

The TLV320AIC23 Codec can be powered, initialized, and controlled with little or no audible artifact. The audible artifacts associated with the above operations are commonly known as "Pops" or "Clicks".

With the use of the techniques contained in this document, "pops" and "clicks" can be virtually eliminated form the output of the headphone amplifier when it is driving an impedance of 32 Ω or less.

Power-On

Turning the supply voltage onto a semiconductor audio device, without audible artifact, is generally one of the more difficult challenges in the design of the system.

• **Sequence:** The method for low artifact power on with the TLV320AIC23 is simply to apply DVDD first while simultaneously applying a "trickle current" to AVDD from DVDD. After the bulk capacitance is charged to approximately 2.4 Volts, by the "trickle current", AVDD is then applied.

• **Technique:** Since the codec is a software-controlled device, there will be a controller in the system, such as a DSP or Microcontroller. Generally, the power supplies are enabled by the system controller for the purpose of system power on, and to control shutdown or sleep modes.

Texas Instruments manufactures a complete product line of high quality, Low Dropout Voltage Regulators with an Enable feature that facilitates their control by software. One example of this type of Voltage Regulator is the TPS76433.

The system designer can utilize two of the above mentioned voltage regulators, one for AVDD and the other for DVDD. Then by simply connecting a 1 Kohm resistor between DVDD and AVDD, the "trickle current" can be developed. The use of two voltage regulators will improve audio performance, and in some cases reduce the risk of EMI problems.

The system controller enables DVDD, then waits the appropriate length of time for AVDD to be charged to 2.4 Volts by the "trickle current", and then enables AVDD. The artifact created by the application of voltage to AVDD is attenuated by over 300 to 1 because the 1 Kohm resistor limits the ability of the artifact to drive a 32 ohm load. When AVDD is applied by the AVDD Voltage Regulator, the analog circuitry in the TLC320AIC23 has been fully biased by the "trickle current", therefore, no further artifact is created.

Power Down Control Register

Bit	D8	D7	D6	D5	D4	D3	D2	D1	D0
Function	x	OFF	CLK	OSC	OUT	DAC	ADC	MIC	LINE
Default	1	0	0	0	0	0	1	1	1
OFF		Device Power				0 = On			1=Off
CLK		Clock				0 = On			1=Off
OSC		Oscillator				0 = On			1=Off
OUT		Outputs				0 = On			1=Off
DAC		DAC				0 = On			1=Off
ADC		ADC				0 = On			1=Off
MIC		Microphone input				0 = On			1=Off
LINE		Line input				0 = On			1=Off
X		Reserved							

When system cost is a primary consideration, a simple circuit consisting of a PMOSFET can be used in place of the AVDD voltage regulator. Since analog supply current of the TLV320AIC23 is very low, this PMOSFET can be one of the low current types such as a NDS0605 manufactured by Fairchild Semiconductor. They tend to cost less than the higher current power MOSFETS.

Notice that the ENABLE_AVDD signal is now inverted. This inversion is due to the fact that a PMOSFET requires a logic low to turn it on.

Device Initialization

After the power is applied to the TLC320AIC23, it is then ready to be turned on by the system controller. This operation is done by writing to the Main Control Register. The Power On Bit should be set and also the Headphone Power Down Bit.

After enabling AVDD and allowing it to settle, send a 117h to the Power Down Control Register, 06h.

Once the device has received the Power On, with the Headphone Powerdown command, the balance of the codec can be initialized.

The final step in the process is to turn on the Headphone Amplifier, by setting Bit D4, in the Power Down Control Register, to a logic 0.

Device Shutdown

When it is time to turn off the codec, first mute the Headphone Amplifier, by setting Bit D4 in the Power Down Control Register, to a Logic 1. Then issue the Power Off command by setting Bit D7 in the Power Down Control Register to a Logic 1.

Device Power Off

After completion of Device Shutdown, power can be removed from TLV320AIC23. Simply turn off the AVDD Voltage Regulator or Power Switch and then turn off the DVDD voltage regulator. The device will produce little or no audible artifact.

References

1. TLV320AIC23 Data Manual, Low Power Codec (TI literature number: SLWS106B)
2. TPS76433 Low Dropout Voltage Regulator (TI literature number: SLVS180B)
3. NDS0605 PMOSFET, Fairchild Semiconductor

Safe Harbor Statement

This publication may contain forward-looking statements that involve a number of risks and uncertainties. These "forward-looking statements" are intended to qualify for the safe harbor from liability established by the Private Securities Litigation Reform Act of 1995. These forward-looking statements generally can be identified by phrases such as TI or its management "believes," "expects," "anticipates," "foresees," "forecasts," "estimates" or other words or phrases of similar import. Similarly, such statements herein that describe the company's products, business strategy, outlook, objectives, plans, intentions or goals also are forward-looking statements. All such forward-looking statements are subject to certain risks and uncertainties that could cause actual results to differ materially from those in forward-looking statements. Please refer to TI's most recent Form 10-K for more information on the risks and uncertainties that could materially affect future results of operations. We disclaim any intention or obligation to update any forward-looking statements as a result of developments occurring after the date of this publication.

You can order these tools (and more) online at www.ti.com/sc/audiosolutions, or visit the product folder URL listed in each article inside.*

*Samples and EVMs can also be ordered by telephone. In North America, call **1-800-477-8924** and ask for ext. 5800. **See page 2** for other region contact information.

Order tools at www.ti.com/sc/audiosolutions today!

Texas Instruments Incorporated
P.O. Box 954
Santa Clarita, CA 91380

Address Service Requested

PRSRT STD
U.S. POSTAGE
PAID
DALLAS, TEXAS
PERMIT NO. 2758