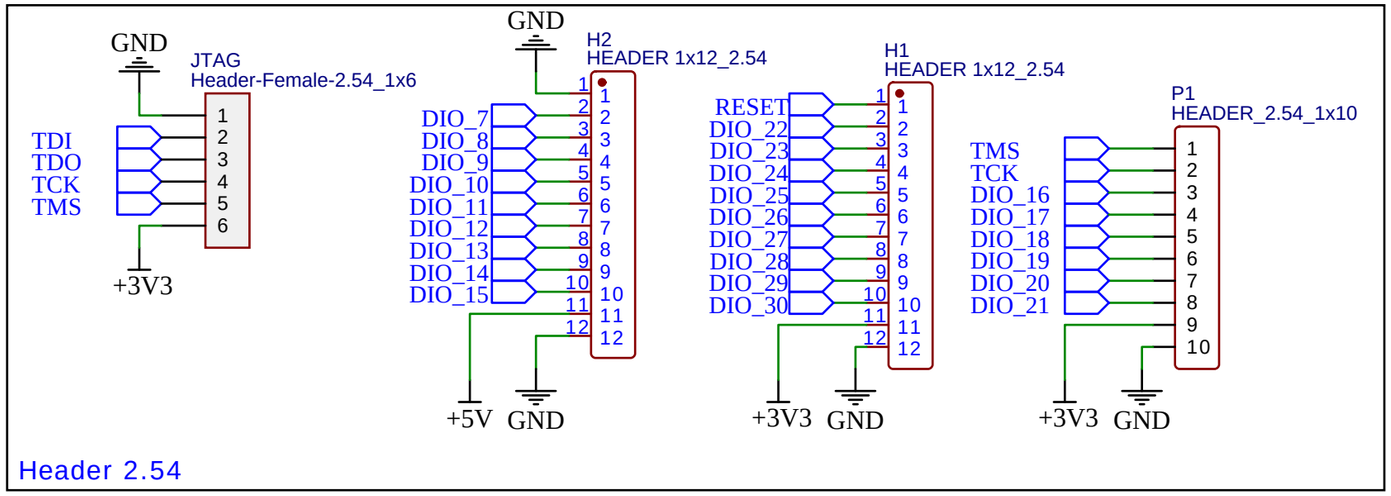

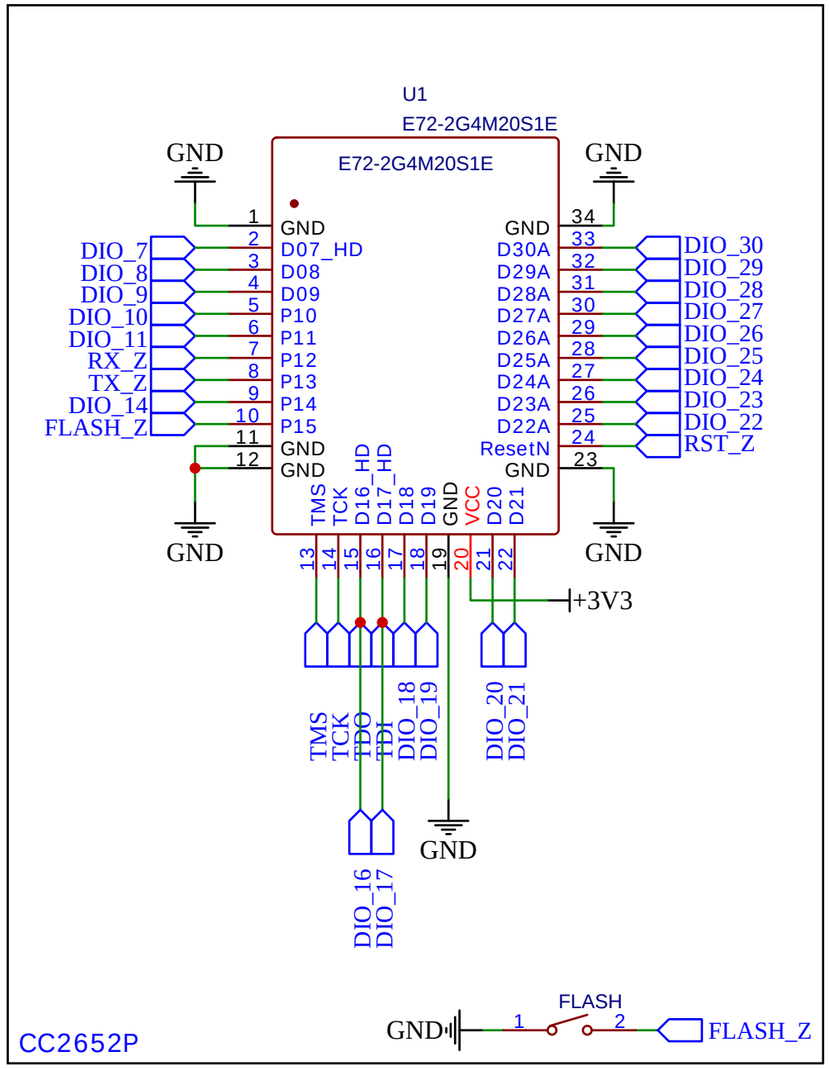

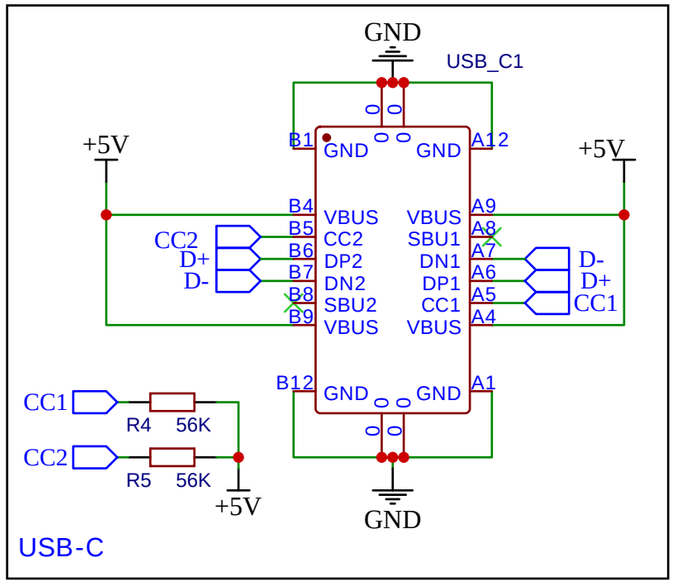

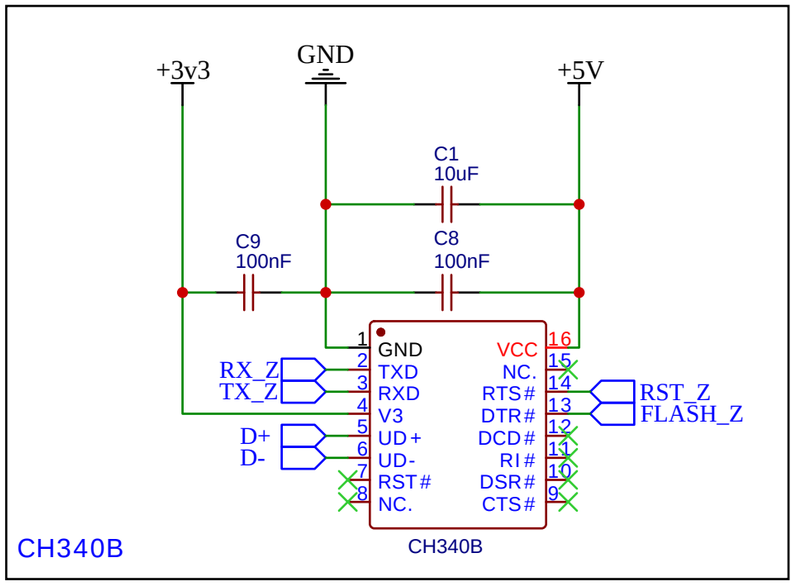

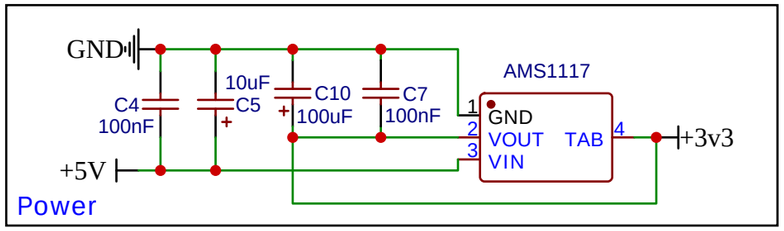

TITLE: ZeeMini - Zb Prototype Board	REV: 1.3
EasyEDA	Company: Tech4You — Sheet: 1/1
	Date: 2021-08-10 — Drawn By: TrimVa