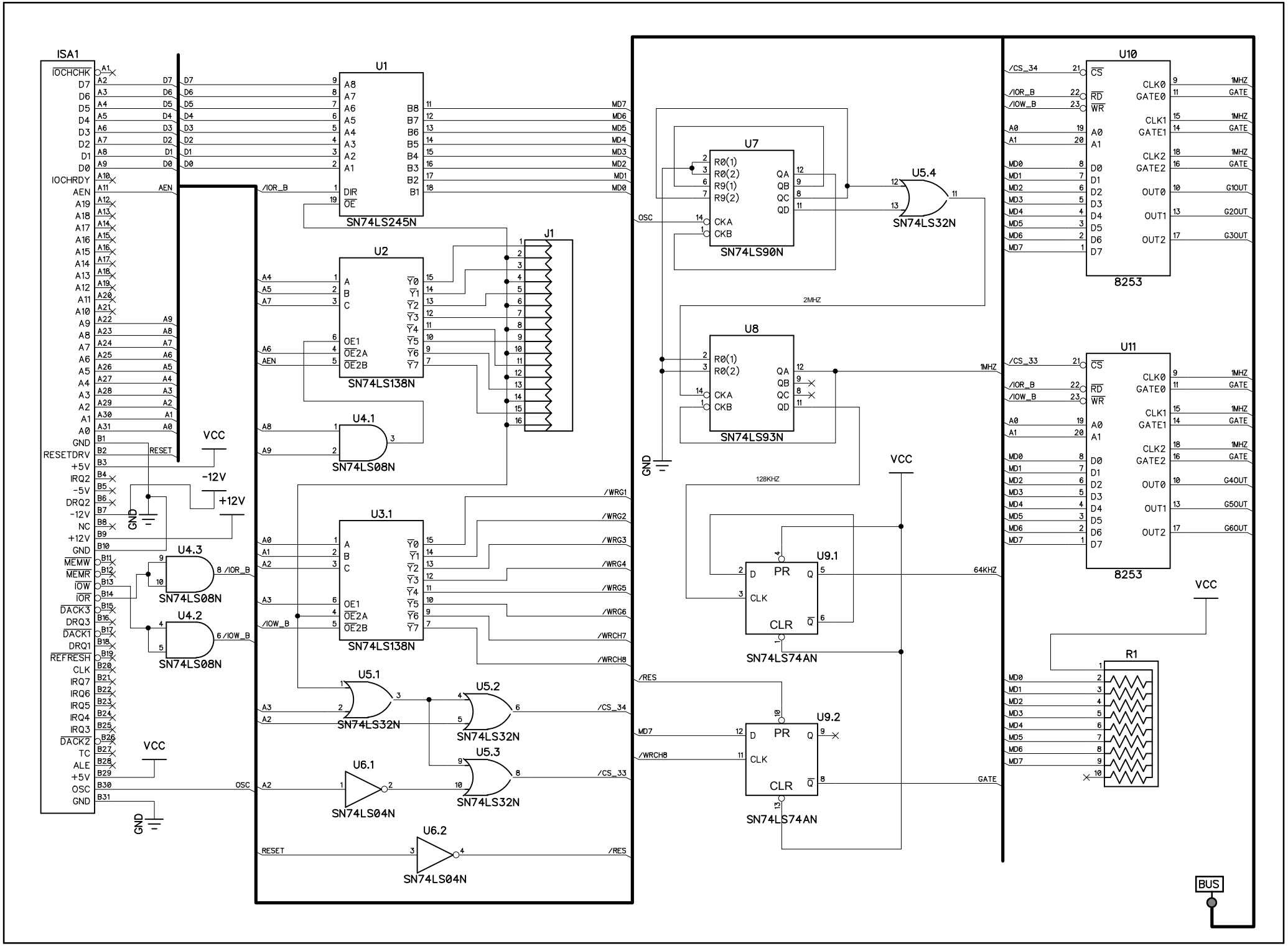
ISA1
IOCHCHK
D7
D6
D5
D4
D3
D2
D1
D0
IOCHRDY
AEN
A19
A18
A17
A16
A15
A14
A13
A12
A11
A10
A9
A8
A7
A6
A5
A4
A3
A2
A1
A0
GND
RESETDRV
+5V
IRQ2
-5V
DRQ2
-12V
NC
+12V
GND
MEMW
MEMR
IOW
IOR
DACK3
DRQ3
DACK1
DRQ1
REFRESH
CLK
IRQ7
IRQ6
IRQ5
IRQ4
IRQ3
DACK2
TC
ALE
+5V
OSC
GND
U1
SN74LS245N
U2
SN74LS138N
U3.1
SN74LS138N
U4.1
SN74LS08N
U4.2
SN74LS08N
U4.3
SN74LS08N
U5.1
SN74LS32N
U5.2
SN74LS32N
U5.3
SN74LS32N
U5.4
SN74LS32N
U6.1
SN74LS04N
U6.2
SN74LS04N
U7
SN74LS90N
U8
SN74LS93N
U9.1
SN74LS74AN
U9.2
SN74LS74AN
U10
8253
U11
8253
J1
R1
VCC
-12V
+12V
GND
/IOR_B
/IOW_B
/WRG1
/WRG2
/WRG3
/WRG4
/WRG5
/WRG6
/WRCH7
/WRCH8
/CS_34
/CS_33
/RES
MD7
MD6
MD5
MD4
MD3
MD2
MD1
MD0
2MHZ
1MHZ
128KHZ
64KHZ
GATE
G1OUT
G2OUT
G3OUT
G4OUT
G5OUT
G6OUT
BUS

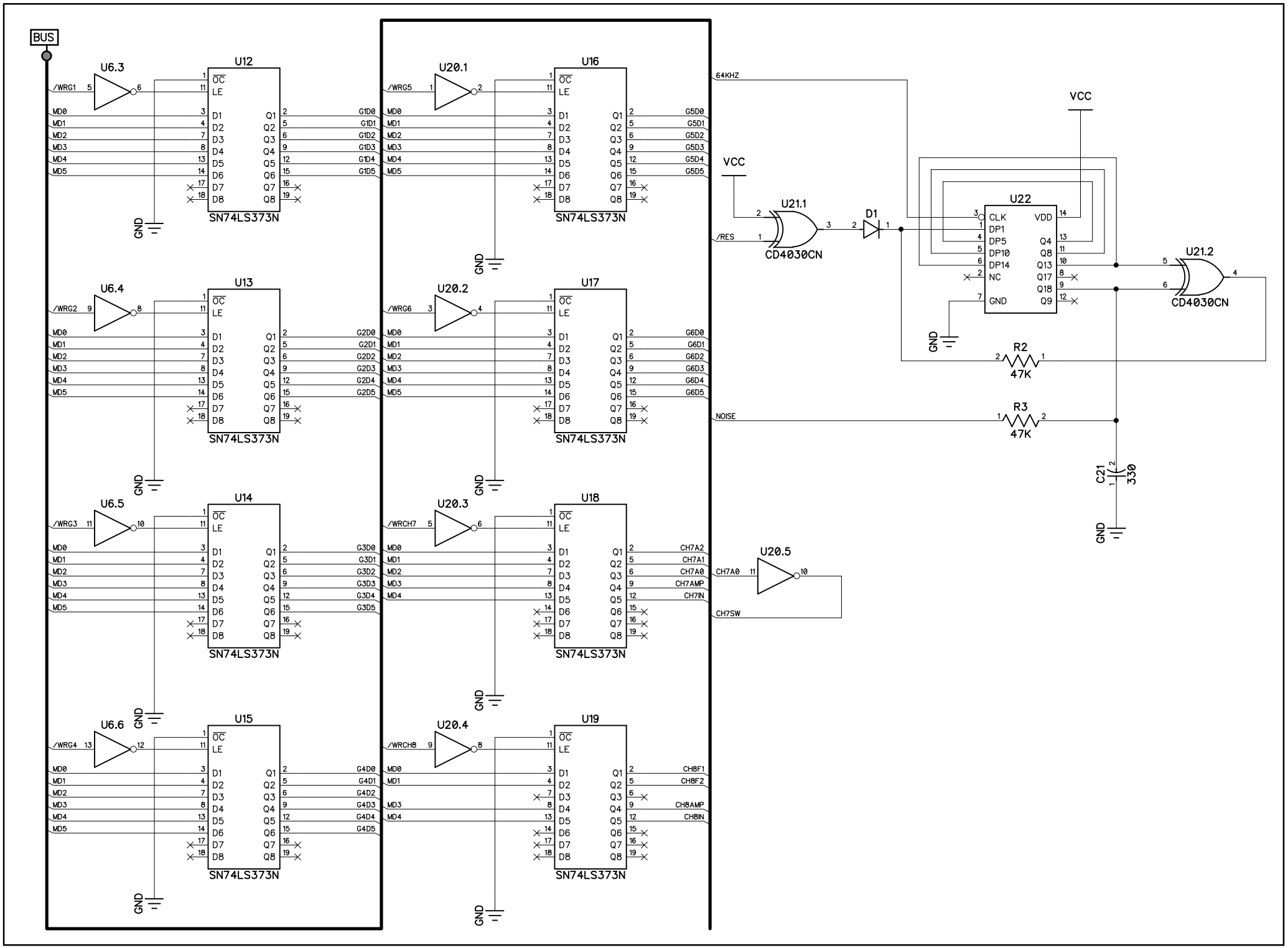
BUS
U6.3
/WRG1
U12
SN74LS373N
U6.4
/WRG2
U13
SN74LS373N
U6.5
/WRG3
U14
SN74LS373N
U6.6
/WRG4
U15
SN74LS373N
U20.1
/WRG5
U16
SN74LS373N
U20.2
/WRG6
U17
SN74LS373N
U20.3
/WRCH7
U18
SN74LS373N
U20.4
/WRCH8
U19
SN74LS373N
MD0
MD1
MD2
MD3
MD4
MD5
G1D0
G1D1
G1D2
G1D3
G1D4
G1D5
G2D0
G2D1
G2D2
G2D3
G2D4
G2D5
G3D0
G3D1
G3D2
G3D3
G3D4
G3D5
G4D0
G4D1
G4D2
G4D3
G4D4
G4D5
G5D0
G5D1
G5D2
G5D3
G5D4
G5D5
G6D0
G6D1
G6D2
G6D3
G6D4
G6D5
CH7A2
CH7A1
CH7A0
CH7AMP
CH7IN
CH8F1
CH8F2
CH8AMP
CH8IN
GND
64KHZ
VCC
U21.1
/RES
CD4030CN
D1
U22
CLK
DP1
DP5
DP10
DP14
NC
GND
VDD
Q4
Q8
Q13
Q17
Q18
Q9
U21.2
CD4030CN
R2
47K
R3
47K
NOISE
C21
330
U20.5
CH7A0
CH7SW

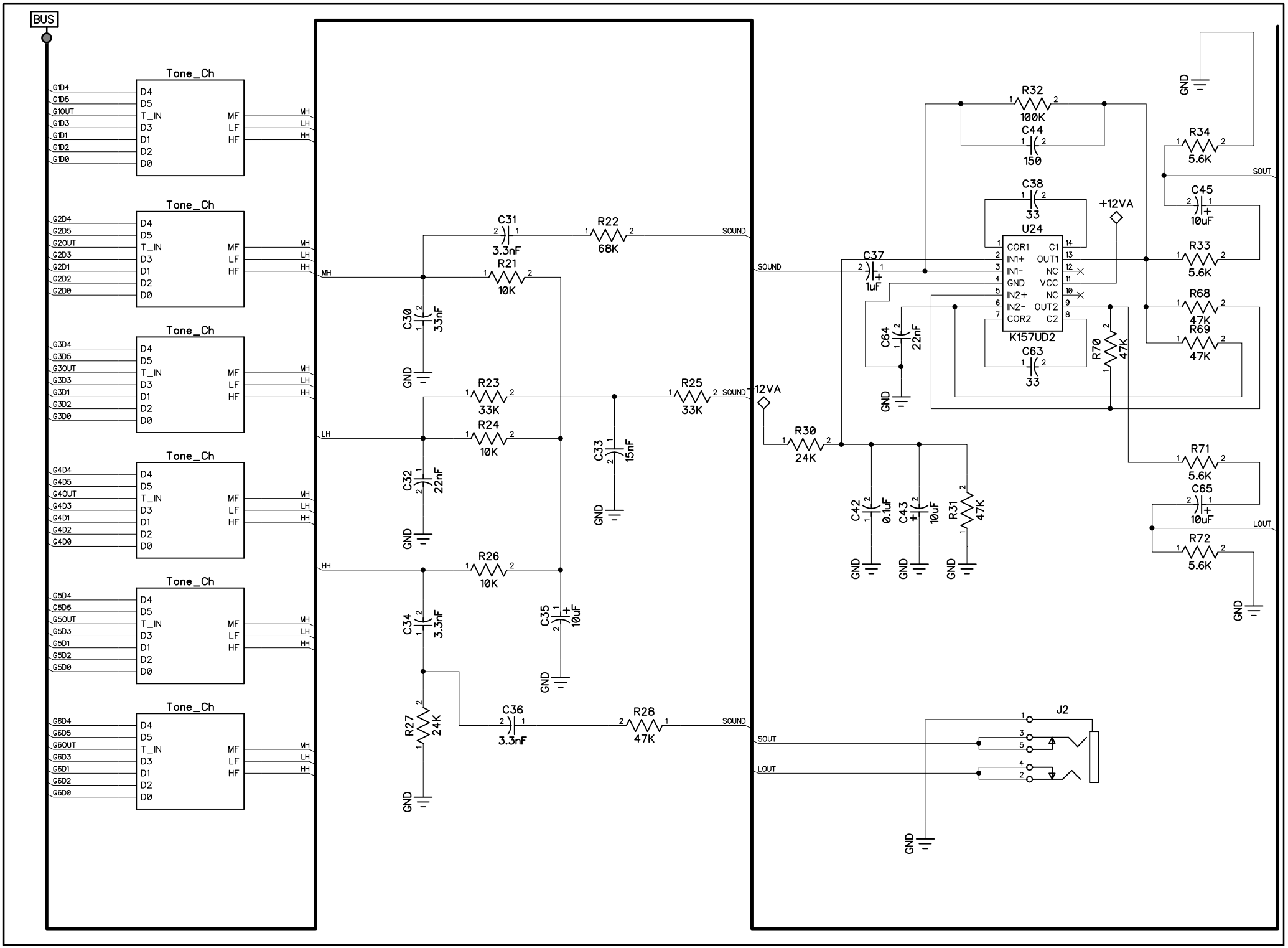
BUS
Tone_Ch
G1D4
G1D5
G1OUT
G1D3
G1D1
G1D2
G1D0
G2D4
G2D5
G2OUT
G2D3
G2D1
G2D2
G2D0
G3D4
G3D5
G3OUT
G3D3
G3D1
G3D2
G3D0
G4D4
G4D5
G4OUT
G4D3
G4D1
G4D2
G4D0
G5D4
G5D5
G5OUT
G5D3
G5D1
G5D2
G5D0
G6D4
G6D5
G6OUT
G6D3
G6D1
G6D2
G6D0
D4
D5
T_IN
D3
D1
D2
D0
MF
LF
HF
MH
LH
HH
C31
3.3nF
R22
68K
R21
10K
C30
33nF
R23
33K
R24
10K
C32
22nF
R26
10K
C34
3.3nF
C35
10uF
C33
15nF
R25
33K
R27
24K
C36
3.3nF
R28
47K
SOUND
12VA
R30
24K
C37
1uF
C42
0.1uF
C43
10uF
R31
47K
R32
100K
C44
150
C38
33
U24
COR1
IN1+
IN1-
GND
IN2+
IN2-
COR2
C1
OUT1
NC
VCC
NC
OUT2
C2
K157UD2
C63
33
C64
22nF
R70
47K
+12VA
R33
5.6K
R68
47K
R69
47K
R34
5.6K
C45
10uF
R71
5.6K
C65
10uF
R72
5.6K
SOUT
LOUT
J2
GND

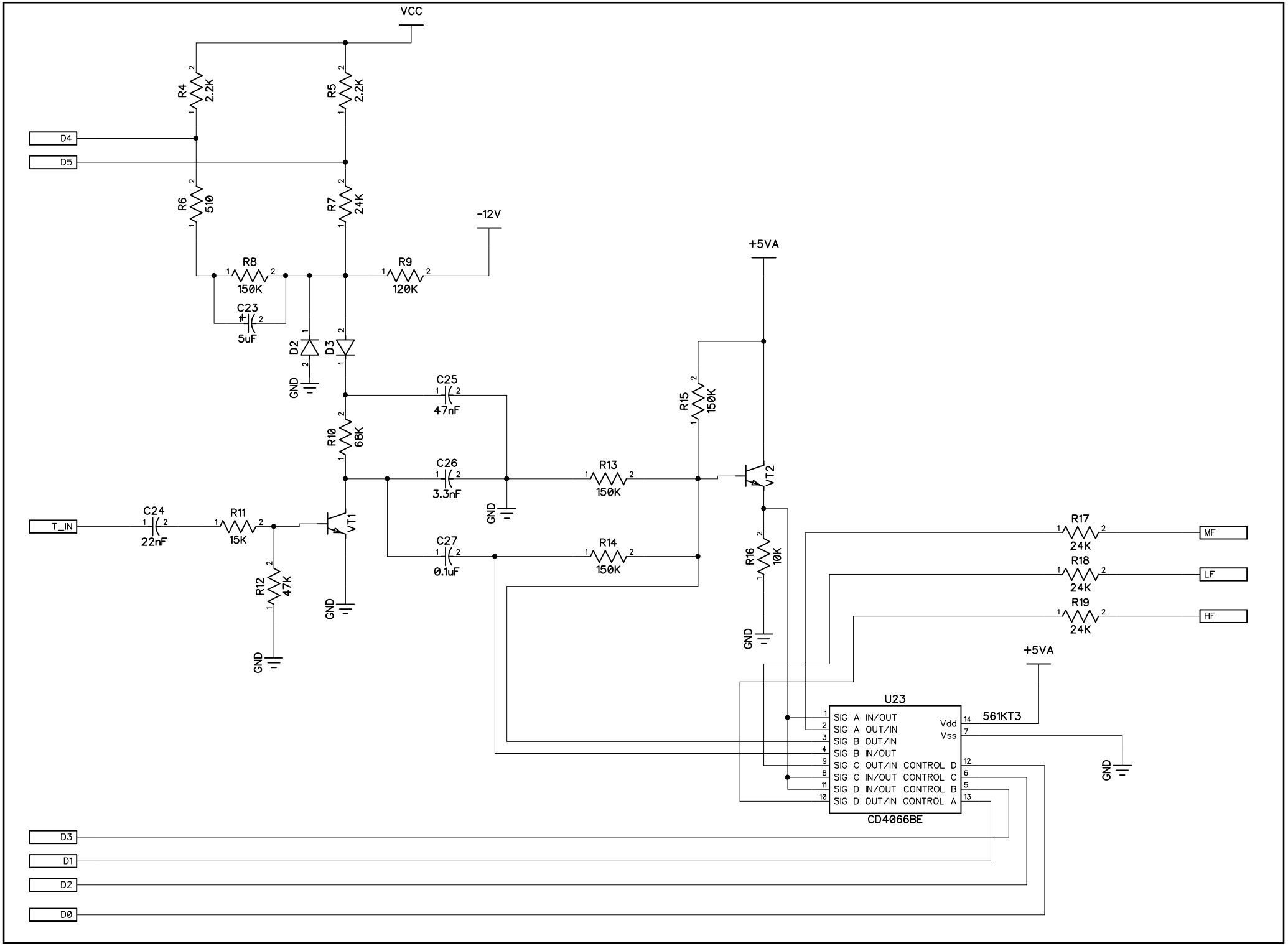
VCC
R4
2.2K
R5
2.2K
D4
D5
R6
510
R7
24K
-12V
R8
150K
R9
120K
C23
5uF
D2
D3
GND
C25
47nF
R10
68K
C26
3.3nF
R13
150K
R15
150K
+5VA
VT2
T_IN
C24
22nF
R11
15K
VT1
C27
0.1uF
R14
150K
R12
47K
R16
10K
R17
24K
R18
24K
R19
24K
MF
LF
HF
+5VA
U23
561KT3
SIG A IN/OUT
SIG A OUT/IN
SIG B OUT/IN
SIG B IN/OUT
SIG C OUT/IN
SIG C IN/OUT
SIG D IN/OUT
SIG D OUT/IN
Vdd
Vss
CONTROL D
CONTROL C
CONTROL B
CONTROL A
CD4066BE
D3
D1
D2
D0

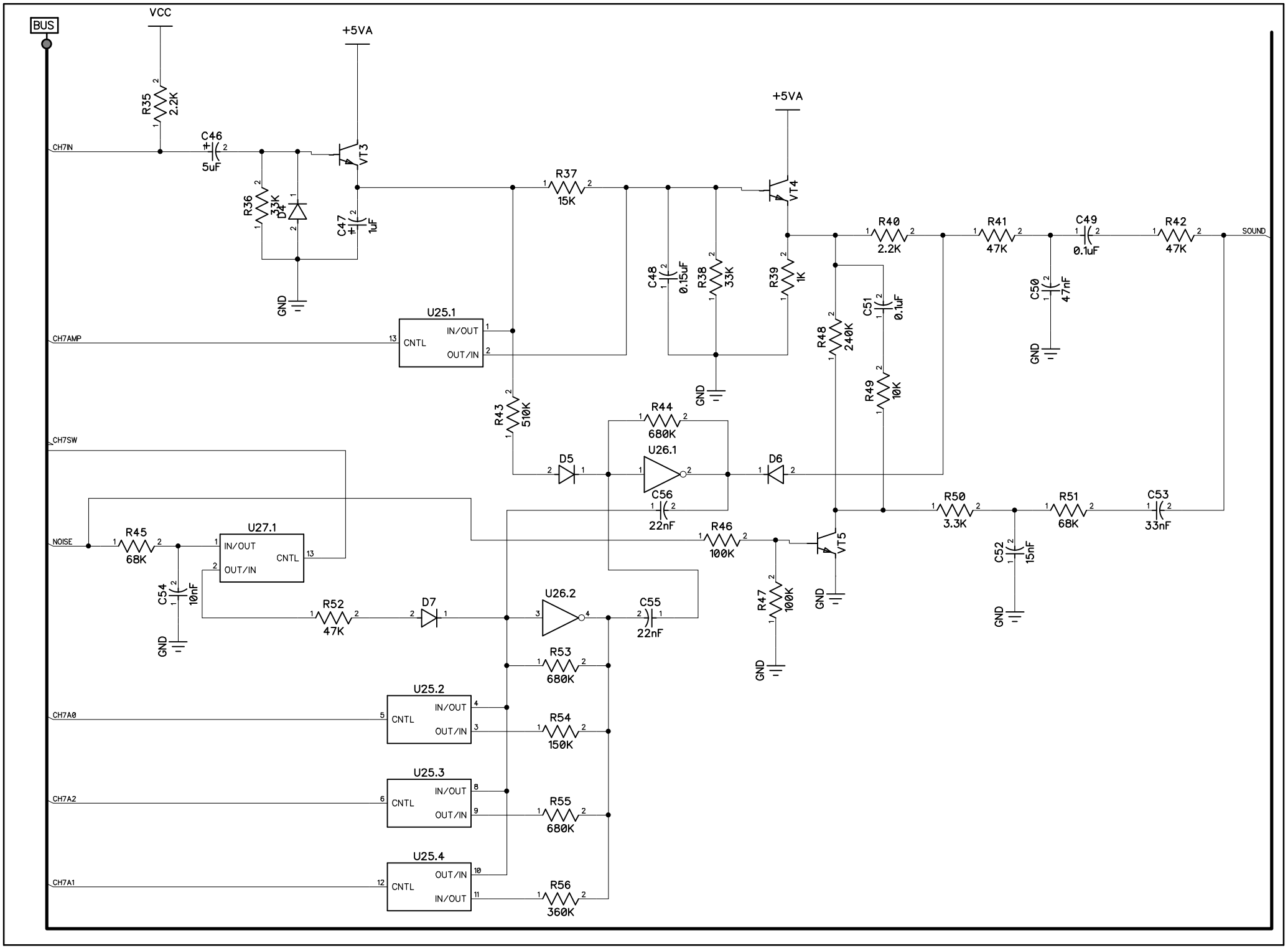
BUS
VCC
+5VA
R35
2.2K
C46
5uF
CH7IN
R36
33K
D4
C47
1uF
VT3
GND
R37
15K
+5VA
VT4
C48
0.15uF
R38
33K
R39
1K
R40
2.2K
R41
47K
C49
0.1uF
R42
47K
SOUND
C50
47nF
C51
0.1uF
R48
240K
R49
10K
U25.1
CNTL
IN/OUT
OUT/IN
CH7AMP
R43
510K
R44
680K
U26.1
D5
D6
C56
22nF
CH7SW
R50
3.3K
R51
68K
C53
33nF
C52
15nF
NOISE
R45
68K
U27.1
IN/OUT
OUT/IN
CNTL
C54
10nF
R46
100K
VT5
R47
100K
R52
47K
D7
U26.2
C55
22nF
R53
680K
U25.2
CH7A0
R54
150K
U25.3
CH7A2
R55
680K
U25.4
CH7A1
R56
360K

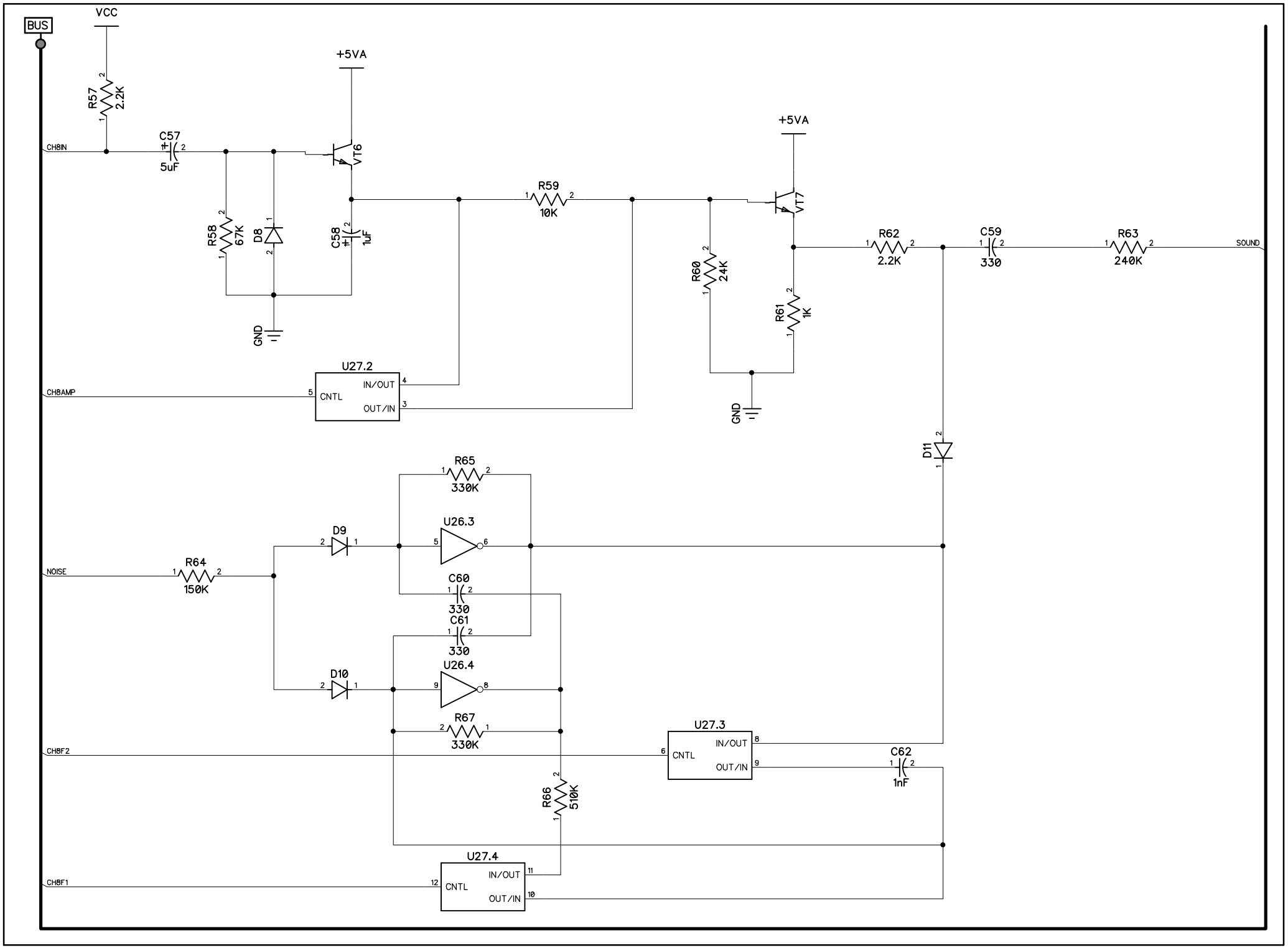
BUS
VCC
R57
2.2K
CH8IN
C57
5uF
+5VA
VT6
R58
67K
D8
C58
1uF
GND
R59
10K
+5VA
VT7
R60
24K
R61
1K
GND
R62
2.2K
C59
330
R63
240K
SOUND
U27.2
CH8AMP
CNTL
IN/OUT
OUT/IN
D11
R65
330K
U26.3
D9
NOISE
R64
150K
C60
330
C61
330
U26.4
D10
R67
330K
U27.3
CH8F2
CNTL
IN/OUT
OUT/IN
C62
1nF
R66
510K
U27.4
CH8F1
CNTL
IN/OUT
OUT/IN

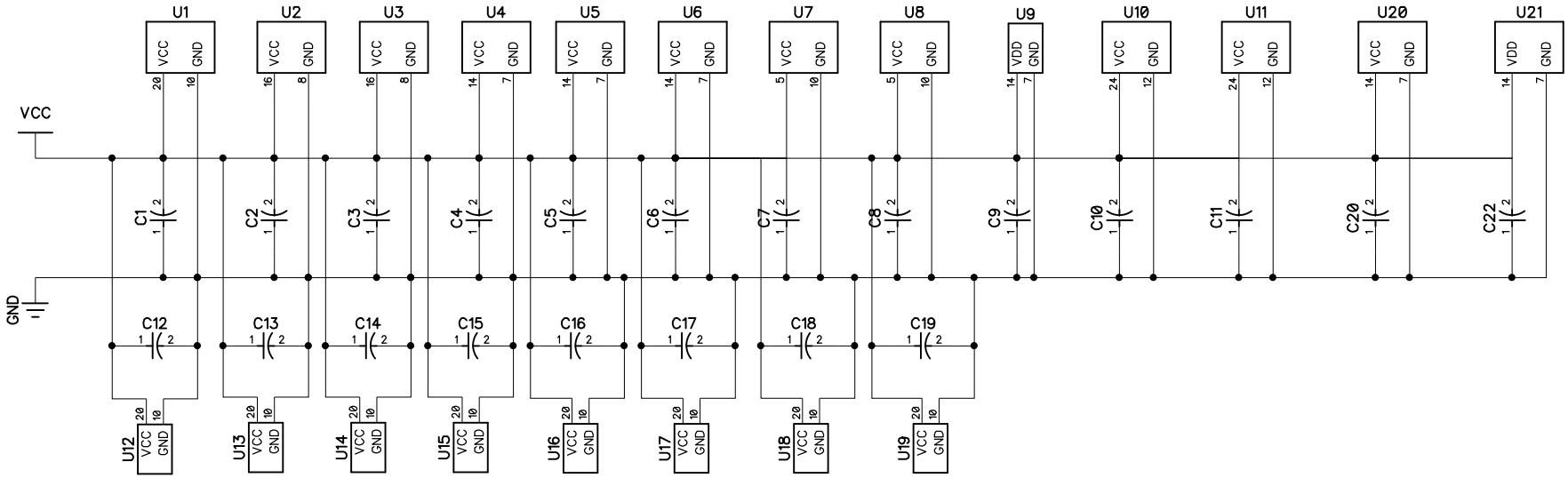
U1
U2
U3
U4
U5
U6
U7
U8
U9
U10
U11
U20
U21
VCC
GND
VDD
C1
C2
C3
C4
C5
C6
C7
C8
C9
C10
C11
C20
C22
C12
C13
C14
C15
C16
C17
C18
C19
U12
U13
U14
U15
U16
U17
U18
U19

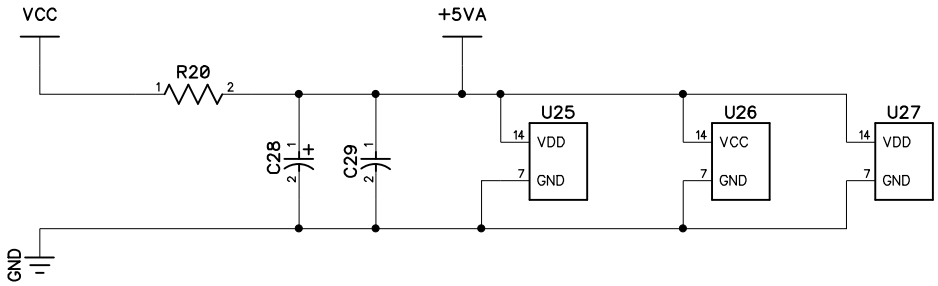
VCC
+5VA
R20
C28
C29
U25
U26
U27
VDD
VCC
GND

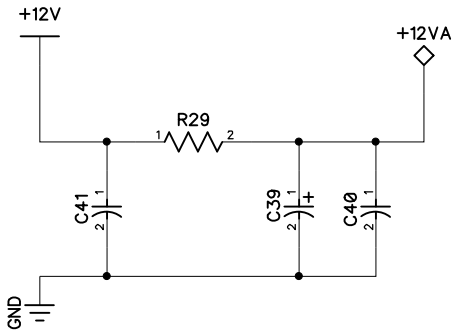
+12V
+12VA
R29
C41
C39
C40
GND

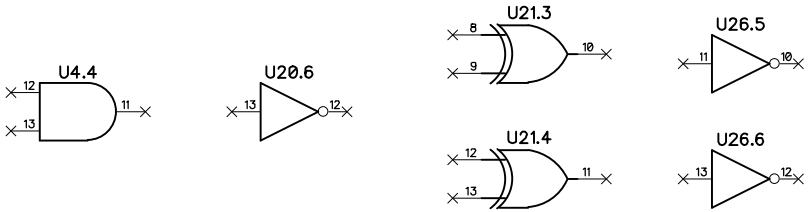
U4.4
U20.6
U21.3
U21.4
U26.5
U26.6