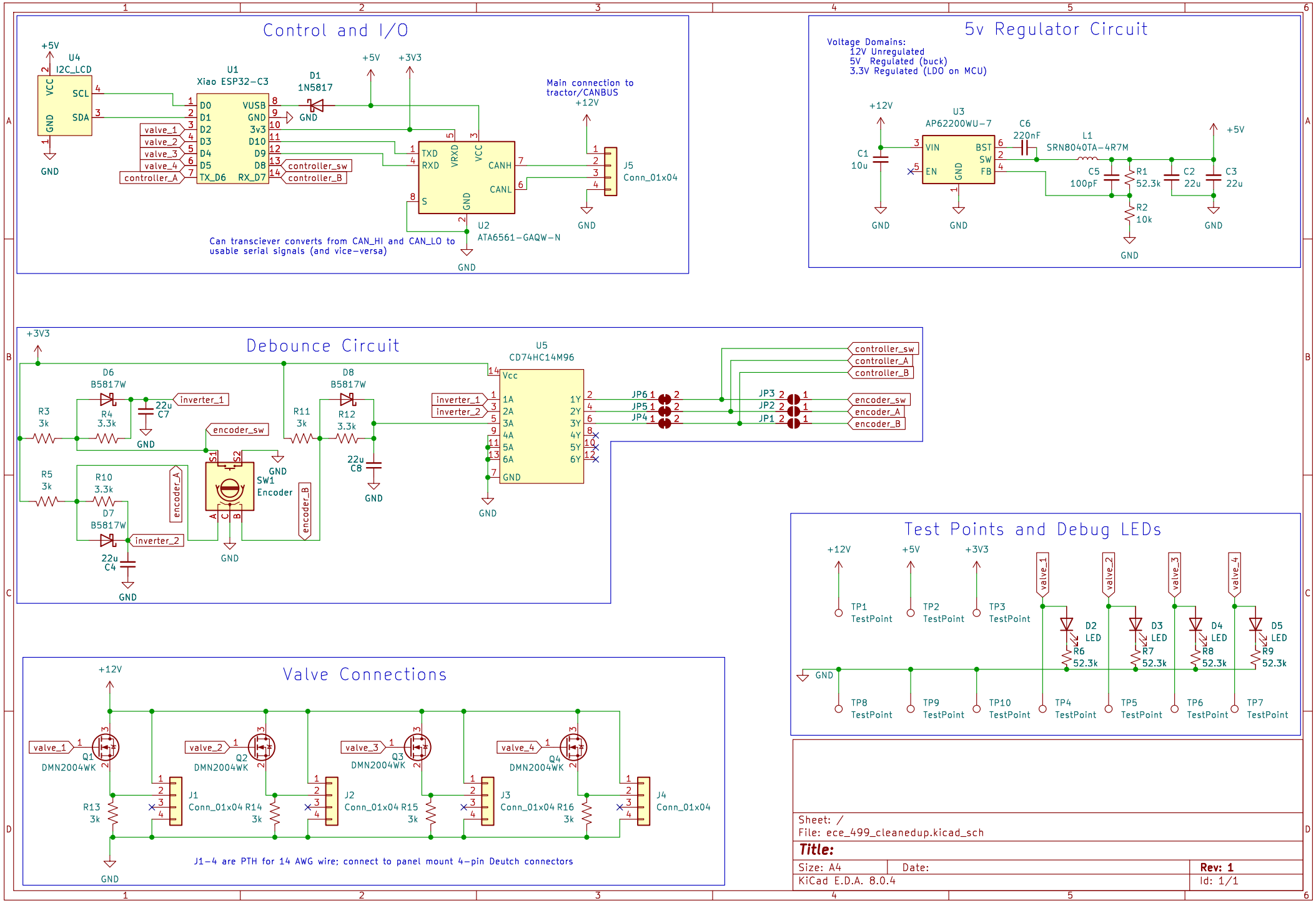
Control and I/O
U4
I2C_LCD
VCC
SCL
SDA
GND
+5V
U1
Xiao ESP32-C3
D0
D1
D2
D3
D4
D5
TX_D6
VUSB
GND
3v3
D10
D9
D8
RX_D7
valve_1
valve_2
valve_3
valve_4
controller_A
controller_sw
controller_B
D1
1N5817
+3V3
TXD
RXD
VRXD
VCC
CANH
CANL
S
U2
ATA6561-GAQW-N
Can transciever converts from CAN_HI and CAN_LO to usable serial signals (and vice-versa)
Main connection to tractor/CANBUS
+12V
J5
Conn_01x04
5v Regulator Circuit
Voltage Domains:
12V Unregulated
5V Regulated (buck)
3.3V Regulated (LDO on MCU)
U3
AP62200WU-7
VIN
EN
BST
SW
FB
C1
10u
C6
220nF
L1
SRN8040TA-4R7M
C5
100pF
R1
52.3k
R2
10k
C2
22u
C3
22u
Debounce Circuit
+3V3
D6
B5817W
R3
3k
R4
3.3k
22u
C7
inverter_1
encoder_sw
R5
3k
R10
3.3k
D7
B5817W
inverter_2
22u
C4
encoder_A
encoder_B
SW1
Encoder
D8
B5817W
R11
3k
R12
3.3k
22u
C8
U5
CD74HC14M96
Vcc
1A
2A
3A
4A
5A
6A
1Y
2Y
3Y
4Y
5Y
6Y
JP6
JP5
JP4
JP3
JP2
JP1
controller_sw
controller_A
controller_B
encoder_sw
encoder_A
encoder_B
Test Points and Debug LEDs
+12V
+5V
+3V3
TP1
TestPoint
TP2
TestPoint
TP3
TestPoint
valve_1
valve_2
valve_3
valve_4
D2
LED
R6
52.3k
D3
LED
R7
52.3k
D4
LED
R8
52.3k
D5
LED
R9
52.3k
TP8
TestPoint
TP9
TestPoint
TP10
TestPoint
TP4
TestPoint
TP5
TestPoint
TP6
TestPoint
TP7
TestPoint
Valve Connections
+12V
Q1
DMN2004WK
Q2
DMN2004WK
Q3
DMN2004WK
Q4
DMN2004WK
R13
3k
R14
3k
R15
3k
R16
3k
J1
Conn_01x04
J2
Conn_01x04
J3
Conn_01x04
J4
Conn_01x04
J1-4 are PTH for 14 AWG wire; connect to panel mount 4-pin Deutch connectors
Sheet: /
File: ece_499_cleanedup.kicad_sch
Title:
Size: A4
Date:
Rev: 1
KiCad E.D.A. 8.0.4
Id: 1/1