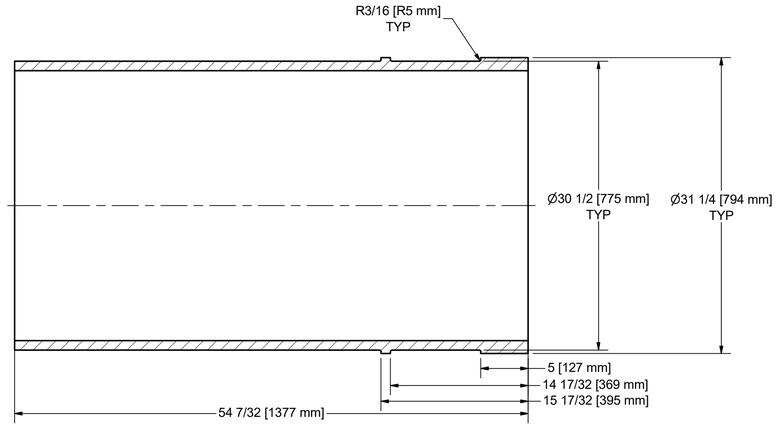

SECTION A-A

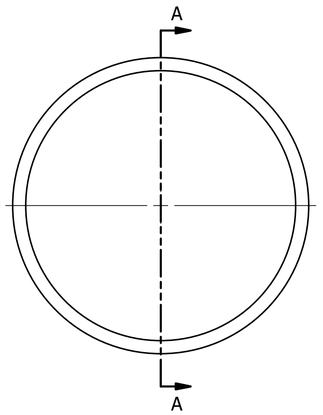

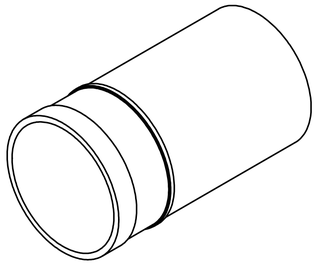

PART NUMBER	DESCRIPTION	MASS
A1-19027-300-04 HCWI liner - nozzle - cast	28 1/2" ID x 1" WALL x 54 7/32" HCWI NOZZLE LINER, ASTM A532 CLASS III TYPE A, PF# 470289	1390 lbmass

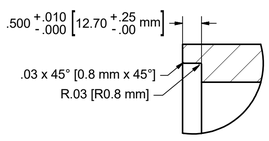

DETAIL E

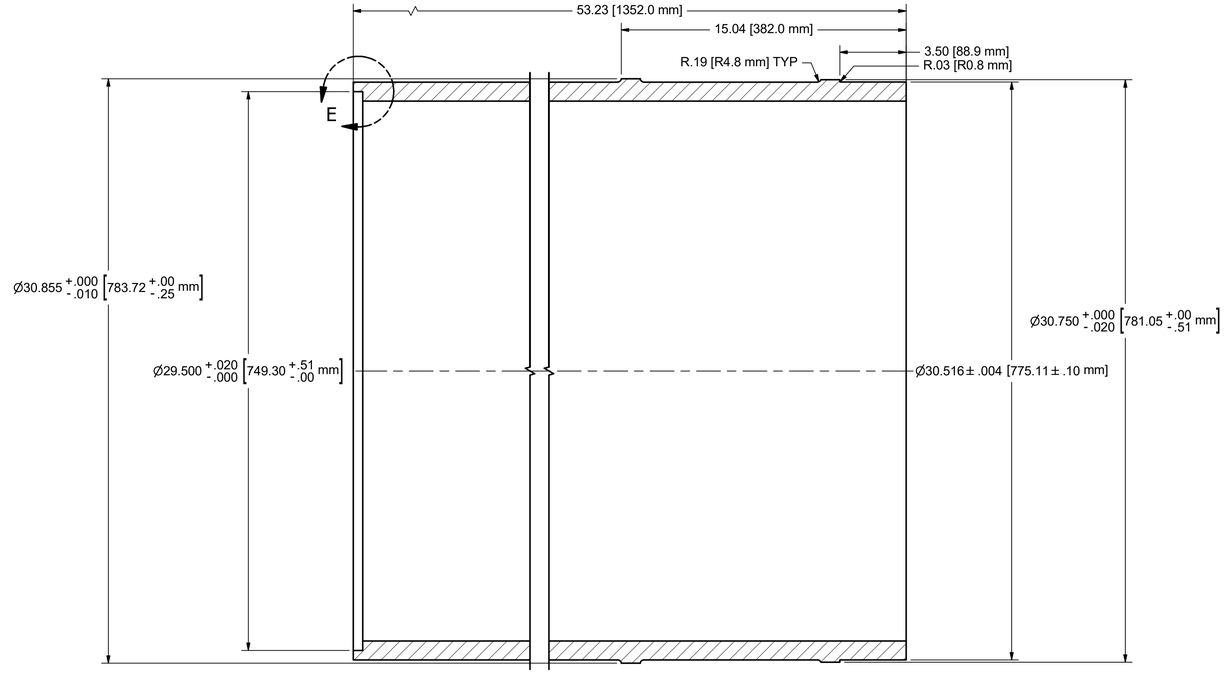

SECTION B-B

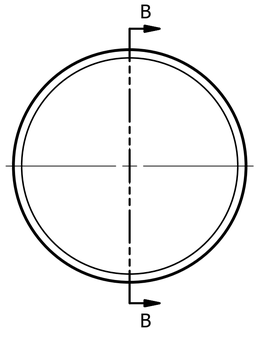

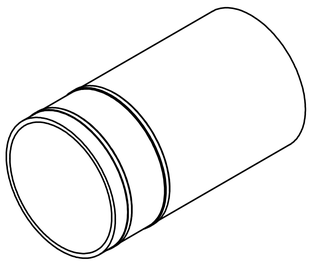

PART NUMBER	DESCRIPTION	MASS
A1-19027-300-04 HCWI liner - nozzle	28 1/2" ID x 1" WALL x 53 7/32" HCWI NOZZLE LINER, ASTM A532 CLASS III TYPE A, PF# 470289	1310 lbmass

REVISION HISTORY

REV	DATE	DESCRIPTION	INITALS
0	2/10/20	ISSUED FOR CONSTRUCTION	KLS

THIS DOCUMENT CONTAINS PROPRIETARY INFORMATION AND SHALL NOT BE COPIED, NEITHER IS IT DISCLOSED TO OTHERS FOR MANUFACTURING PURPOSES WITHOUT WRITTEN PERMISSION FROM ALCO INC. OR ITS DIVISIONS.

EST. WT.

UNLESS OTHERWISE SPECIFIED
ALL DIMENSIONS ARE IN INCHES. BREAK ALL SHARP EDGES .01-.03R OR 45°. RADII .05 T.I.R. .010. INTERPRET DWG. PER ANSI Y14.5 STANDARD.

TOLERANCES
X = ± 1/16
X.X = ± .030
X.XX = ± .015
X.XXX = ± .005
ANGLES = ± 1/2°

125 FINISH ON ALL MACHINED SURFACES

DO NOT SCALE

DRAWN BY: KLS	DATE 2/10/20	
CHECKED BY: JDS	DATE 2/11/20	
APPROVED: BEM	DATE 2/11/20	
MATERIAL & HEAT TREAT: ASTM A532 CLASS III TYPE A		

ALCO Industrial
2103 - 8 Street,
Nisku, Alberta, Canada T9E 7Y9
Phone: (780) 451-6222 ♦ Fax: (780) 452-4355

TITLE
HCWI NOZZLE LINER - CAST / MACH'D
SYNCRUDE AURORA HT2 MAIN LINE

PROJECT No.	REFERENCE	REV.
A1-19027	A1-19027-300-00	0

FILE NAME: A1-19027-300-04 HCWI liner - nozzle.idw

SHEET 1 OF 1