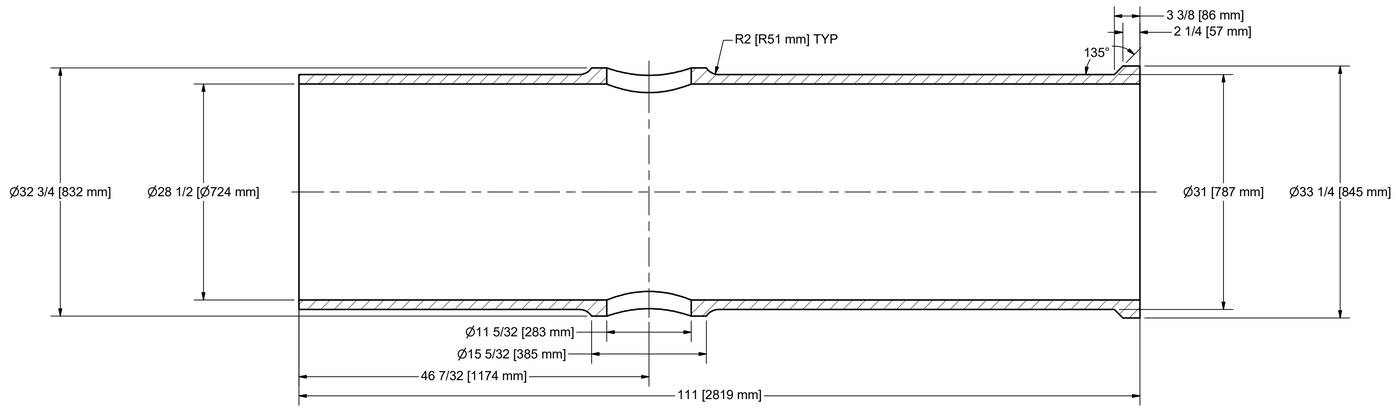


SECTION A-A

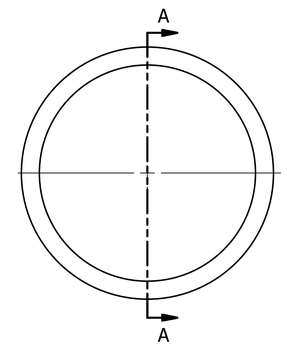


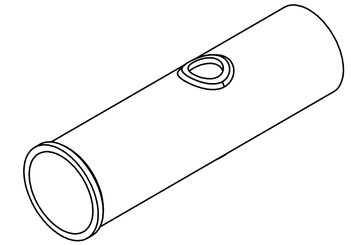

| PART NUMBER | DESCRIPTION | MASS |
|---|---|---|
| A1-19027-400-07 HCWI liner - trunk - cast | 28 1/2" ID x 1 1/4" WALL x 90" HCWI LINER w/ DRAINS, ASTM A532 CLASS III TYPE A, PF# 470299 | 3504 lbmass |

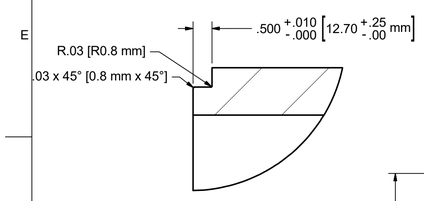


DETAIL E

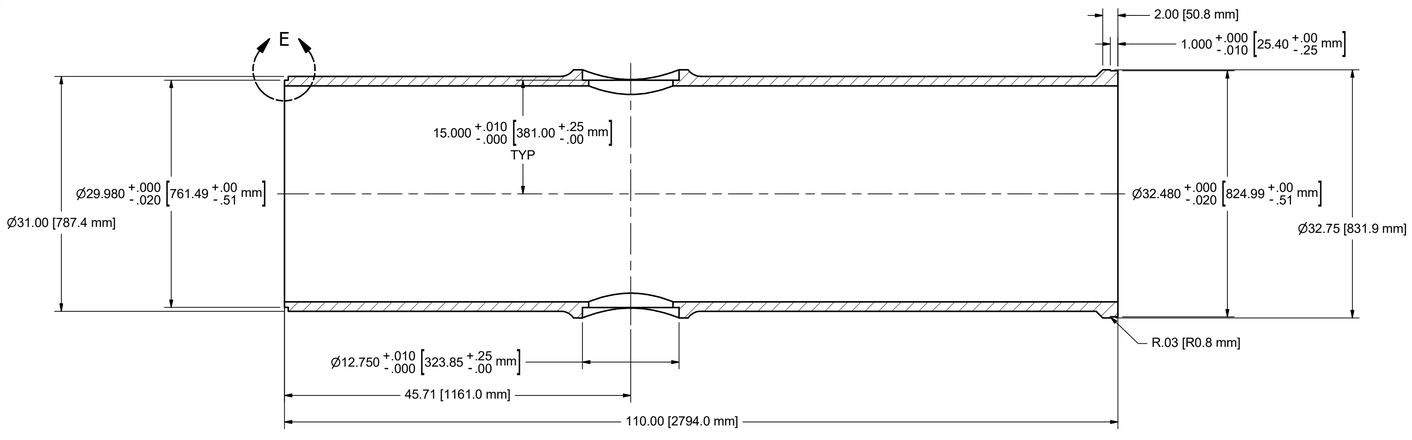


SECTION B-B

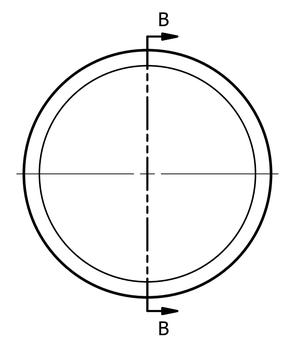


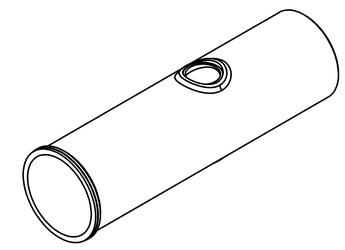

| PART NUMBER | DESCRIPTION | MASS |
|---|---|---|
| A1-19027-400-07 HCWI liner - trunk | 28 1/2" ID x 1 1/4" WALL x 109.5" HCWI LINER w/ DRAINS, ASTM A532 CLASS III TYPE A, PF# 470299 | 3422 lbmass |

REVISION HISTORY

| REV | DATE | DESCRIPTION | INITALS |
|---|---|---|---|
| 0 | 2/10/20 | ISSUED FOR CONSTRUCTION | KLS |

THIS DOCUMENT CONTAINS PROPRIETARY INFORMATION AND MAY NOT BE COPIED NOR NEITHER BE DISCLOSED TO OTHERS FOR ANY PURPOSE WITHOUT WRITTEN PERMISSION OF ALCO INC. OR ITS DIVISIONS.

EST. WT.

UNLESS OTHERWISE SPECIFIED
ALL DIMENSIONS ARE IN INCHES. BREAK ALL SHARP EDGES .01-.03R OR 45°. RADII .05 T.I.R. .010. INTERPRET DWG. PER ANSI Y14.5 STANDARD.

TOLERANCES
X = ± 1/16
X.X = ± .030
X.XX = ± .015
X.XXX = ± .005
ANGLES = ± 1/2°

125 FINISH ON ALL MACHINED SURFACES

DO NOT SCALE

| | | |
|---|---|---|
| DRAWN BY: KLS | DATE 2/11/20 | |
| CHECKED BY: JDS | DATE 2/11/20 | |
| APPROVED: BEM | DATE 2/11/20 | |
| MATERIAL & HEAT TREAT: ASTM A532 CLASS III TYPE A | | |

ALCO
ALCO Industrial
2103 - 8 Street,
Nisku, Alberta, Canada T9E 7Y9
Phone: (780) 451-6222 ♦ Fax: (780) 452-4355

TITLE
HCWI LINER - TRUNK - CAST / MACH'D
SYNCRUDE AURORA HT2 MAIN LINE

| PROJECT No. | REFERENCE | REV. |
|---|---|---|
| A1-19027 | A1-19027-400-00 | 0 |

FILE NAME: A1-19027-400-07 HCWI liner - trunk.idw

SHEET 1 OF 1