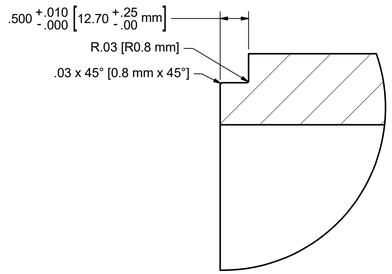

DETAIL C

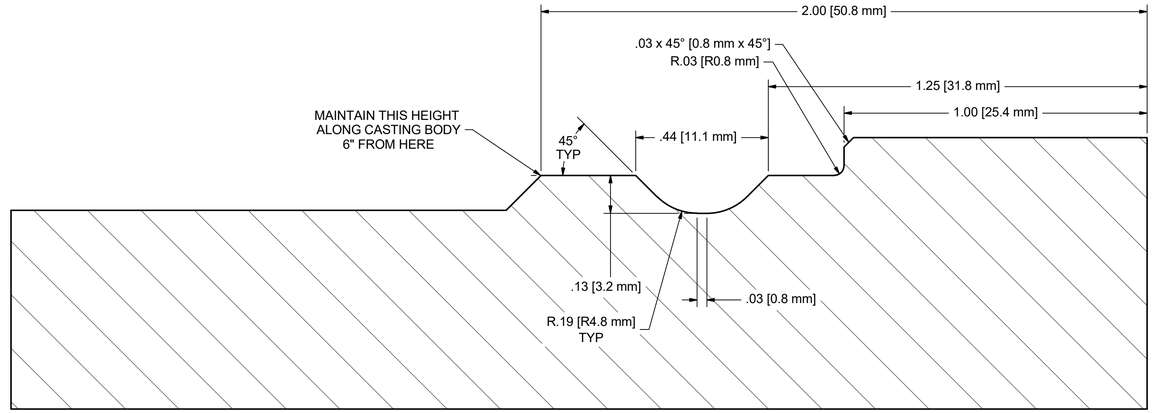

DETAIL D

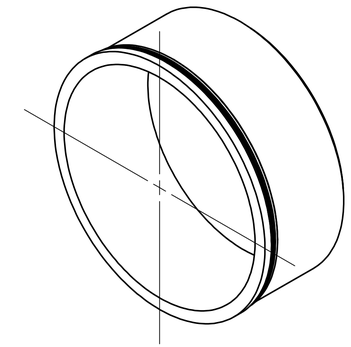

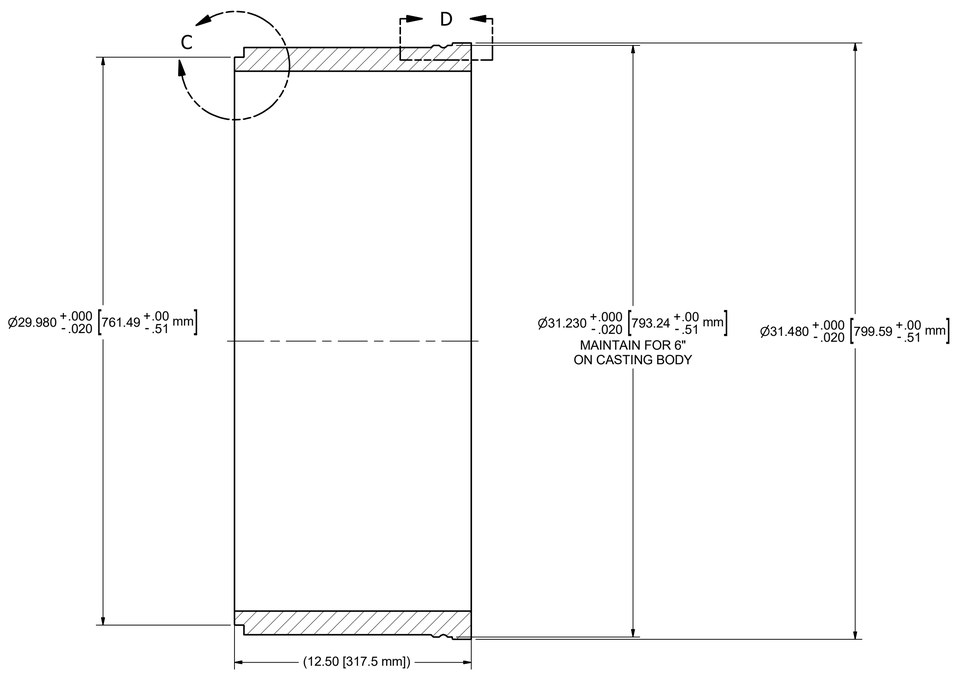

SECTION A-A

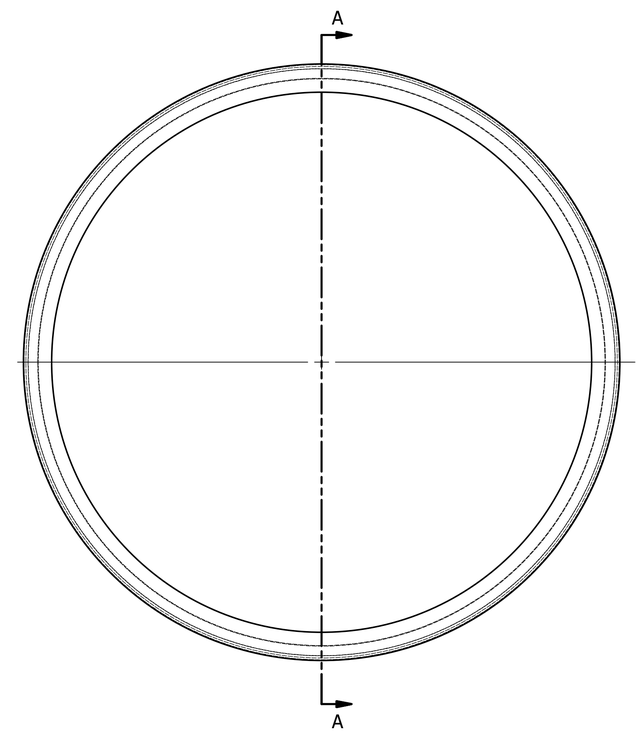

PART NUMBER	DESCRIPTION
A1-19037-200-06 HCWI liner - pup	28 1/2" ID x 1 1/4" WALL x 12 1/2" HCWI LINER, ASTM A532 CLASS III TYPE A, LEVEL 2, PF# 503368

REVISION HISTORY

REV	DATE	DESCRIPTION	INITALS
0	1/16/20	ISSUED FOR CONSTRUCTION, ADD PF TO DESCRIPTION, UPDATED HATCHING OF DETAIL D	JDS
A	12/17/19	ISSUED FOR REVIEW	KLS

THIS DOCUMENT CONTAINS PROPRIETARY INFORMATION AND SHALL NOT BE COPIED OR NEITHER BE DISCLOSED TO OTHERS FOR ANY PURPOSE, NOR BE USED FOR MANUFACTURING PURPOSES WITHOUT WRITTEN PERMISSION FROM ALCO INC. OR ITS DIVISIONS.

EST. WT. 389 lbmass

UNLESS OTHERWISE SPECIFIED
ALL DIMENSIONS ARE IN INCHES. BREAK ALL SHARP EDGES .01-.03R OR 45°. RADII .05 T.I.R. .010. INTERPRET DWG PER ANSI Y14.5 STANDARD.

TOLERANCES
X = ± 1/16
X.X = ± .030
X.XX = ± .015
X.XXX = ± .005
ANGLES = ± 1/2°

125 FINISH ON ALL MACHINED SURFACES

DO NOT SCALE

DRAWN BY: KLS	DATE 12/17/19	
CHECKED BY: KLS	DATE 1/16/20	
APPROVED: BEM	DATE 1/16/20	

MATERIAL & HEAT TREAT
ASTM A532 CLASS III TYPE A

ALCO
ALCO Industrial
2103 - 8 Street,
Nisku, Alberta, Canada T9E 7Y9
Phone: (780) 451-6222 ♦ Fax: (780) 452-4355

TITLE
HCWI LINER REMOVABLE PUP - MACHINED
CNUL ALBIAN

PROJECT No.	REFERENCE	REV.
A1-19037	A1-19037-200-00	0

FILE NAME
A1-19037-200-06 HCWI liner - pup.idw

SHEET 1 OF 1