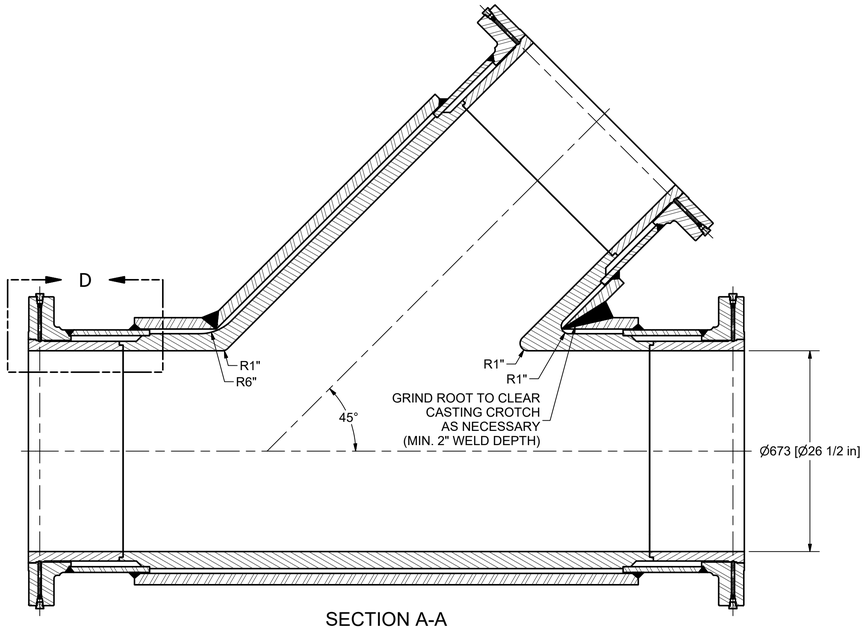

SECTION A-A

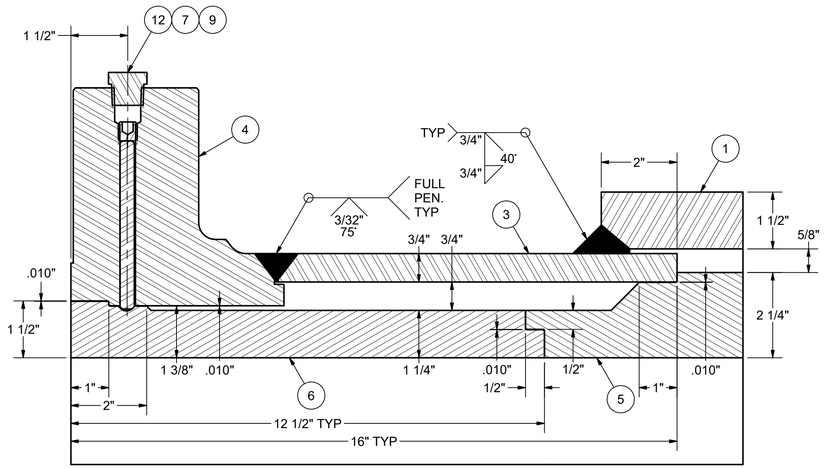

DETAIL D

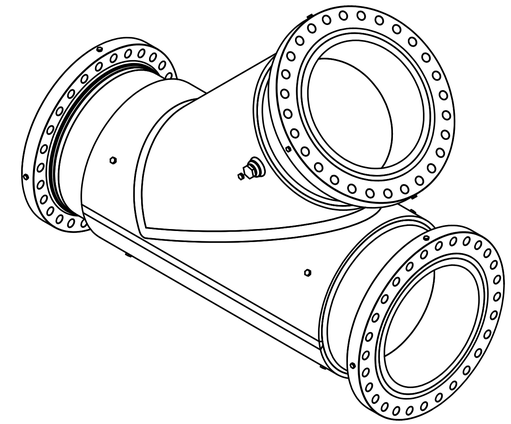

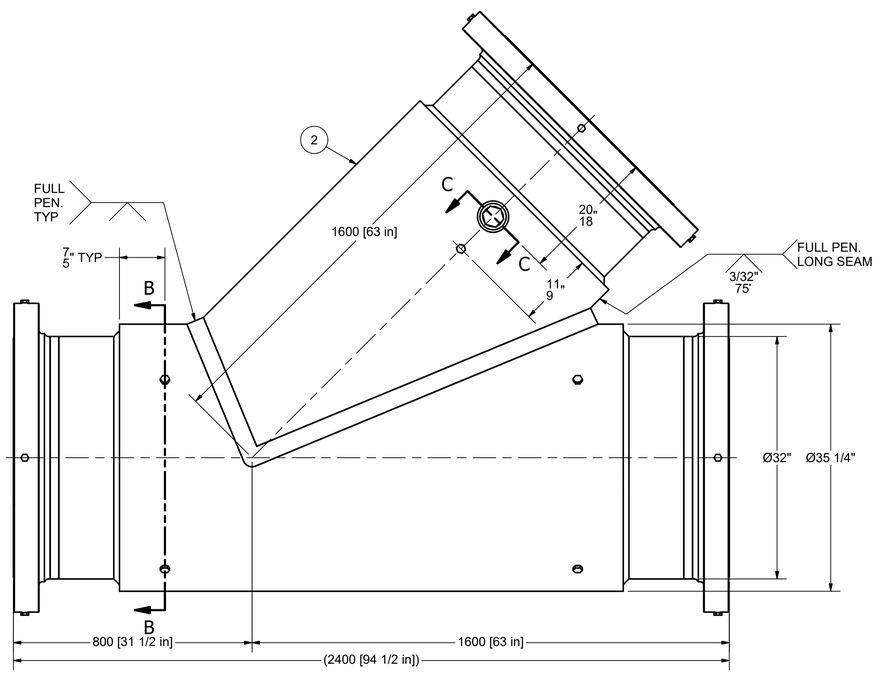

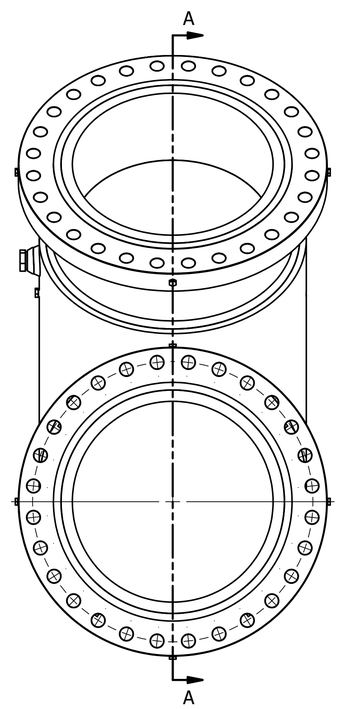

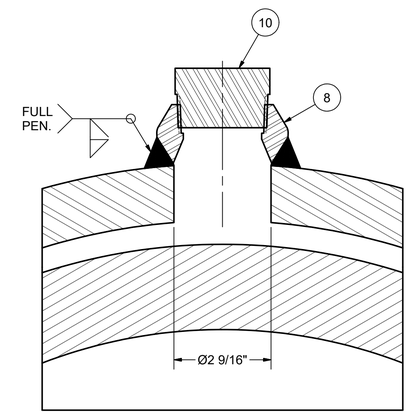

SECTION C-C

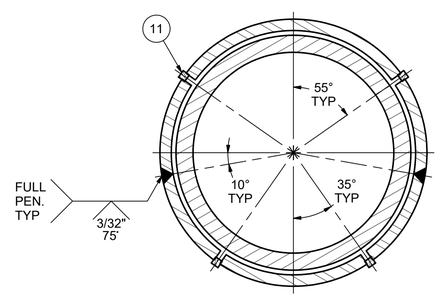

SECTION B-B

DESIGN CODE:	ASME B31.4, 2002
SERVICE:	
DESIGN PRESSURE:	4447 kPag (645 psig)
DESIGN TEMPERATURE:	93°C (199°F)
TEST PRESSURE:	4892 kPag (710 psig)
TEST TEMPERATURE:	15°C (59°F)
TEST DURATION:	30 MINUTES

BILL OF MATERIAL

ITEM	ITEM QTY	PART NUMBER	DESCRIPTION
1	1	A1-19037-100-01 Trunk shell	106 1/32" x 66 1/2" x 1 1/2" PLATE, A516 Gr.70N, ROLLED TO 35 1/4" OD
2	1	A1-19037-100-02 Branch shell	106 1/32" x 48 15/16" x 1 1/2" PLATE, A516 Gr.70N, ROLLED TO 35 1/4" OD
3	3	A1-19037-100-03 32in pipe	32" x 3/4" WALL x 10 17/32" PIPE, API 5L X52 PSL-1
4	3	A1-19037-100-04 28in CL300 RF flange - custom	28" CLASS 300 B16.47 Ser.A FFSO FLANGE, A105N, Ø28 7/8" BORE
5	1	A1-19037-100-05 HCWI lateral	26 1/2" ID x 2 1/4" WALL x 45° HCWI LATERAL, 19 1/2" x 51" x 51", ASTM A532 CLASS III TYPE A, PF#(TBD)
6	3	A1-19037-100-06 HCWI liner - pup	26 1/2" ID x 1 1/4" WALL x 12 1/2" HCWI LINER, ASTM A532 CLASS III TYPE A, PF#(TBD)
7	12	A1-19037-100-07 Trap rod	Ø3/8" x 4 7/16" ROUND BAR, A36
8	1	A1-19037-100-08 2in x 36in threadolet	2" x 36" CLASS 3000 THREADOLET, A105N
9	12	ANSI B18.3 - 1/2-13 UNC x 0.5	1/2"-NC x 1/2" FLAT POINT SOCKET HEAD SET SCREW, PLATED
10	1	ASME B16.11 Hex Head Plug 2	2"-NPT HEX HEAD PLUG, A105N
11	9	ASME B16.11 Hex Head Plug 3/4	3/4"-NPT HEX HEAD PLUG, A105N
12	12	ASME B16.11 Hex Head Plug 1/2	1/2"-NPT HEX HEAD PLUG, A105N

REVISION HISTORY

REV	DATE	DESCRIPTION
A	11/14/19	ISSUED FOR REVIEW

REFER TO DRAWING A1-00001-100-01 FOR
ALL GENERAL NOTES AND SPECIFICATIONS

THIS DOCUMENT CONTAINS PROPRIETARY INFORMATION AND IS TRANSMITTED FOR: NEITHER BE DISCLOSED TO OTHERS FOR: ANY PURPOSE OTHER THAN: MANUFACTURING PURPOSES WITHOUT WRITTEN PERMISSION FROM ALCO INC. OR ITS DIVISIONS.

EST. WT. 13,010 lbs.

UNLESS OTHERWISE SPECIFIED
ALL DIMENSIONS ARE IN INCHES. BREAK ALL SHARP EDGES .01-.03R OR 45°. RADII .05 T.I.R. .010. INTERPRET DWG. PER ANSI Y14.5 STANDARD.

TOLERANCES
X = ± 1/16
X.X = ± .030
X.XX = ± .015
X.XXX = ± .005
ANGLES = ± 1/2°

125 FINISH ON ALL MACHINED SURFACES

DO NOT SCALE

DRAWN BY: GVD	DATE 11/14/19	
CHECKED BY:	DATE	
APPROVED:	DATE	
MATERIAL & HEAT TREAT		

ALCO Industrial
2103 - 8 Street,
Nisku, Alberta, Canada T9E 7Y9
Phone: (780) 451-6222 ♦ Fax: (780) 452-4355

TITLE
28" x 28" x 45° HCWI LATERAL
CNUL ALBIAN

PROJECT No.	REFERENCE	REV.
A1-19037	3-2-0218 Sht.4 OF 7	A

FILE NAME: A1-19037-100-00 28in lateral.idw
SHEET 1 OF 1