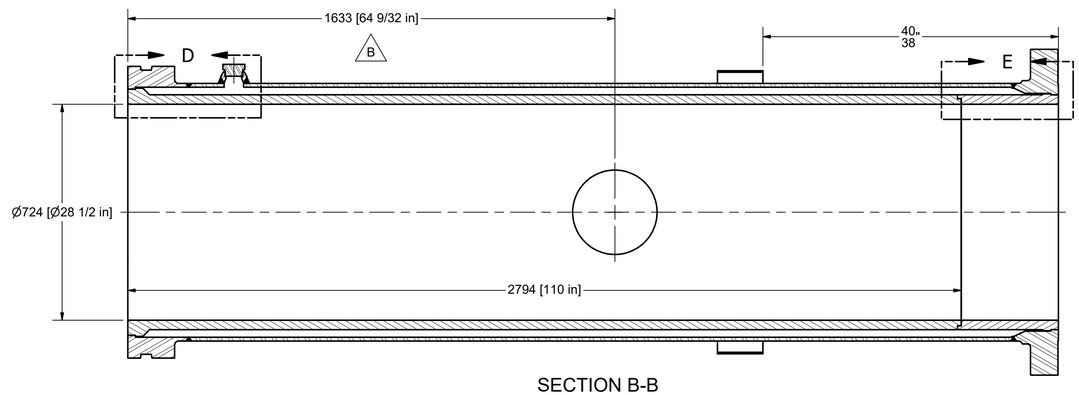

SECTION B-B

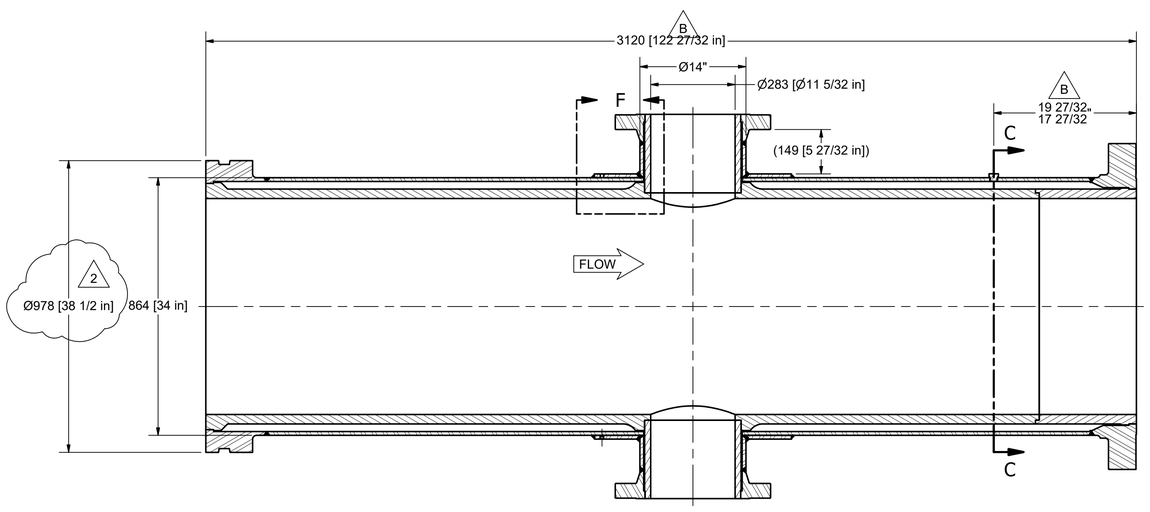

SECTION A-A

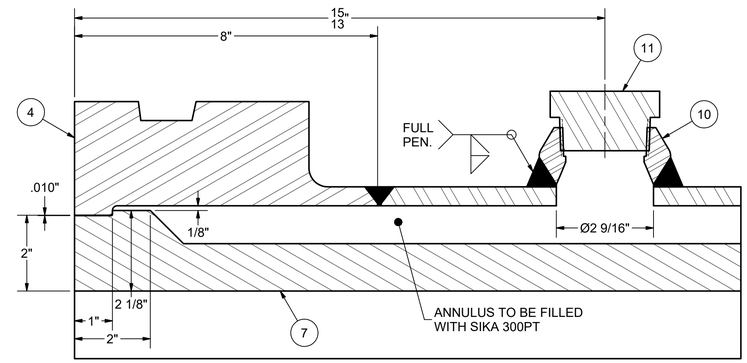

DETAIL D

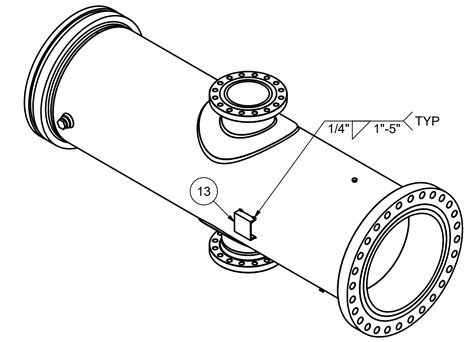

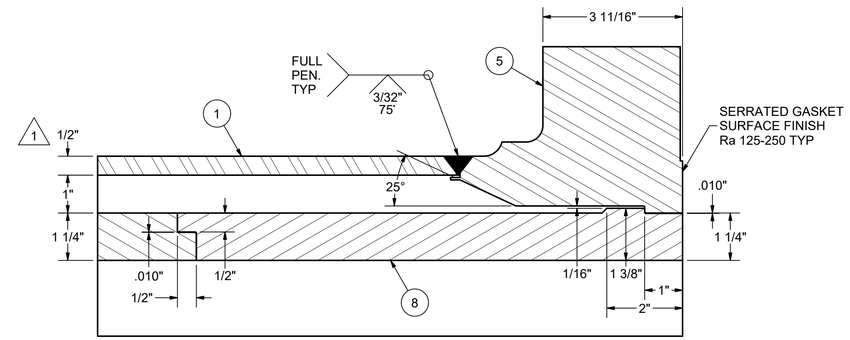

DETAIL E

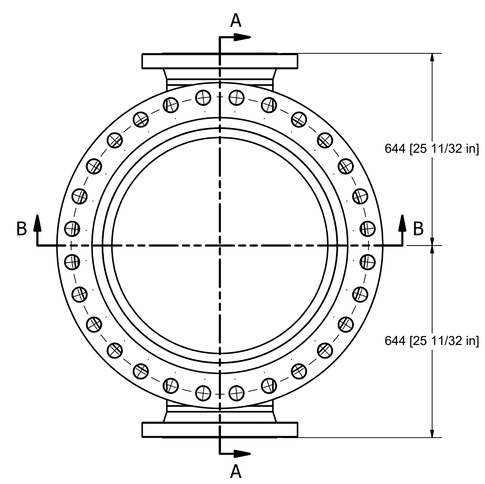

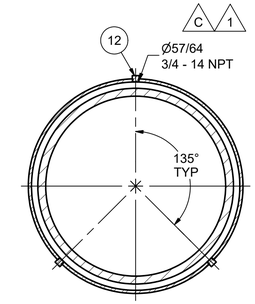

SECTION C-C

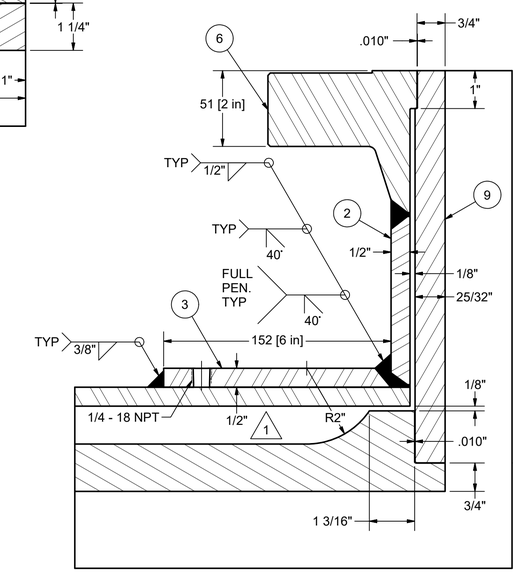

DETAIL F

BILL OF MATERIAL			
ITEM	ITEM QTY	PART NUMBER	DESCRIPTION
1	1	A1-19027-400-01 34in pipe	34" XS x 108 25/32" PIPE, API 5L X65M
2	2	A1-19027-400-02 14in pipe	14" XS x 22 1/2" PIPE, API 5L X65
3	2	A1-19027-400-03 Repad	14" ID x 6" WIDE x 90° REPAD CUT FROM 34" XS PIPE (26° x 100°), API 5L X65M
4	1	A1-19027-200-02 36in Type B victaulic ring	36" TYPE B VICTAULIC RING FOR 200 SERIES COUPLING, A350 LF2, CUSTOM TYPE B
5	1	A1-19027-400-05 30in CL300 RF flange	30" CLASS 300 ASME B16.47 Ser.A RFSO FLANGE, A350 LF2, Ø29" BORE
6	2	A1-19027-400-06 Alco flange - 12in CL300	12" CLASS 300 RF ALCO FLANGE, A350 LF2, Ø12 5/8" BORE, MATES TO B16.5 CLASS 300
7	1	A1-19027-400-07 HCWI liner - trunk	28 1/2" ID x 1 1/4" WALL x 109.5" HCWI LINER w/ DRAINS, ASTM A532 CLASS III TYPE A, PF# 470299
8	1	A1-19027-400-08 HCWI liner - pup	28 1/2" ID x 1 1/4" WALL x 13 11/32" HCWI LINER PUP, ASTM A532 CLASS III TYPE A, PF# 470298
9	2	A1-19027-400-09 HCWI liner - drain	11 1/8" ID x 13/16" WALL x 10 11/32" HCWI LINER, ASTM A532 CLASS III TYPE A, PF# 470297
10	1	A1-19027-400-10 2in x 34in threadolet	2" x 34" CLASS 3000 THREADOLET, A105N
11	1	ASME B16.11 Hex Head Plug 2	2"-NPT HEX BULL PLUG, SA234 WPB-S9
12	3	ASME B16.11 Hex Head Plug 3/4	3/4"-NPT HEX BULL PLUG, SA234 WPB-S9
13	2	Tag mount - 6in	C6x8.2 x 6" [152mm], 44W
14	-	GROUT	SIKA 300PT

REVISION HISTORY			
REV	DATE	DESCRIPTION	INITIALS
2	3/05/20	VICTAULIC RING WAS 34"	GVD
1	2/19/20	34" PIPE & REPAD WERE STD WALL, HEX PLUGS WERE 1/2"-NPT	GVD
0	2/12/20	ISSUED FOR CONSTRUCTION, PIPE WAS X56	BEM
C	2/11/20	PF NUMBERS ADDED, HOLE DIMENSION ADDED	KLS
B	1/21/20	OAL WAS 3123mm (122 15/16"), PORT LOCATION WAS 1636mm (64 13/32"), PLUG LOCATION WAS 19 15/16"/17 15/16", HYDROTEST PRESSURE WAS 5171 kPag (750 psig), UPDATED BoM	GVD
A	1/06/20	ISSUED FOR REVIEW	GVD

PROFESSIONAL ENGINEER BRIAN MURPHY ALBERTA

2020-03-09

DESIGN CODE:	ASME B31.3, 2018
SERVICE:	HYDROTRANSPORT SLURRY
DESIGN PRESSURE:	3447 kPag (500 psig)
DESIGN TEMPERATURE:	94°C (201°F)
TEST PRESSURE:	7665 kPag (1112 psig)
TEST TEMPERATURE:	15°C (59°F)
TEST DURATION:	10 MINUTES

REFER TO DRAWING A1-00001-100-01 FOR ALL GENERAL NOTES AND SPECIFICATIONS

THIS DOCUMENT CONTAINS PROPRIETARY INFORMATION AND SHALL NOT BE COPIED, NEITHER BE DISCLOSED TO OTHERS FOR MANUFACTURING PURPOSES WITHOUT WRITTEN PERMISSION FROM ALCO INC. OR ITS DIVISIONS.

EST. WT. 8,560 lbs.

UNLESS OTHERWISE SPECIFIED
ALL DIMENSIONS ARE IN INCHES. BREAK ALL SHARP EDGES .01-.03R OR 45°. RADII .05 T.I.R. .010. INTERPRET DWG PER ANSI Y14.5 STANDARD.

TOLERANCES
X = ± 1/16
X.X = ± .030
X.XX = ± .015
X.XXX = ± .005
ANGLES = ± 1/2°

125 FINISH ON ALL MACHINED SURFACES

DO NOT SCALE

DRAWN BY: GVD	DATE 1/06/20		
CHECKED BY: KLS	DATE 3/05/20		
APPROVED: BEM	DATE 3/05/20		
MATERIAL & HEAT TREAT			

ALCO ALCO Industrial
2103 - 8 Street,
Nisku, Alberta, Canada T9E 7Y9
Phone: (780) 451-6222 ♦ Fax: (780) 452-4355

PENTICTON FOUNDRY

TITLE
SPOOL SP-237-2-P-126-1-C
SYNCRUDE AURORA HT2 MAIN LINE

PROJECT No.	REFERENCE	REV
A1-19027	SP-237-2-P-126-1-C Rev.A	2

FILE NAME: A1-19027-400-00 SP-237-2-P-126-1-C.idw

SHEET 1 OF 1