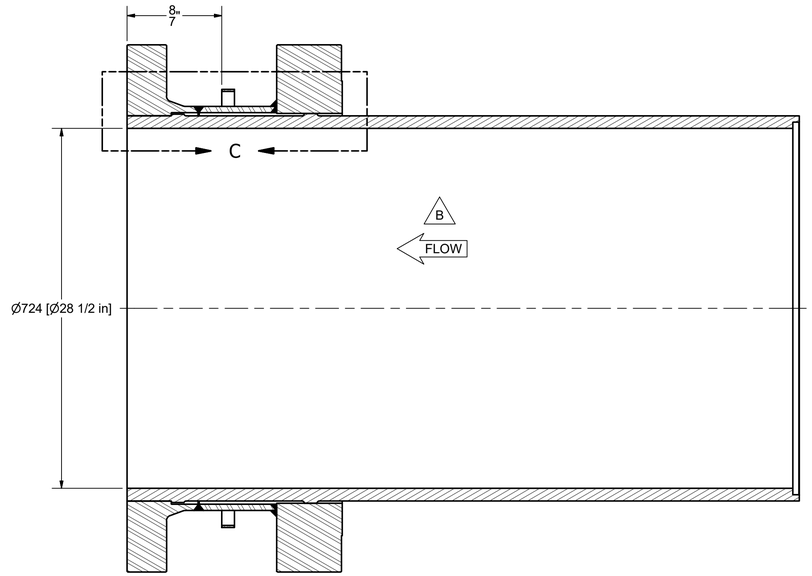

SECTION A-A

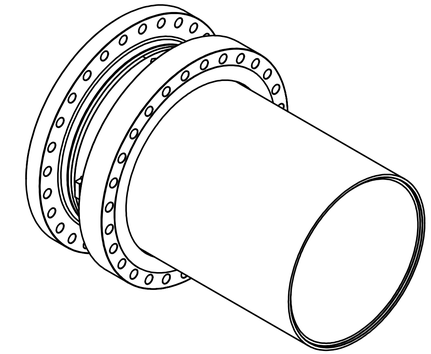

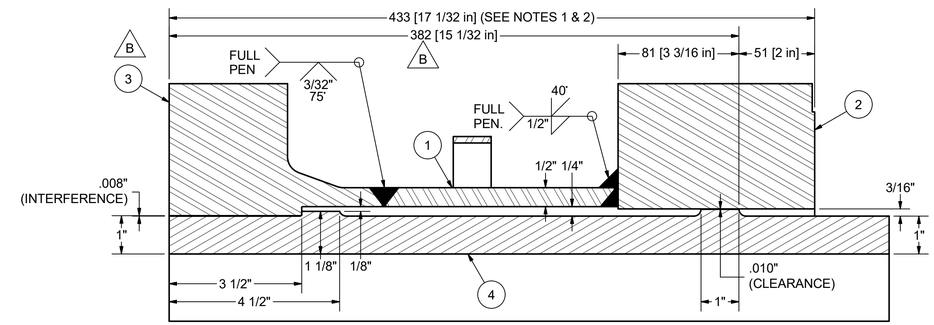

DETAIL C

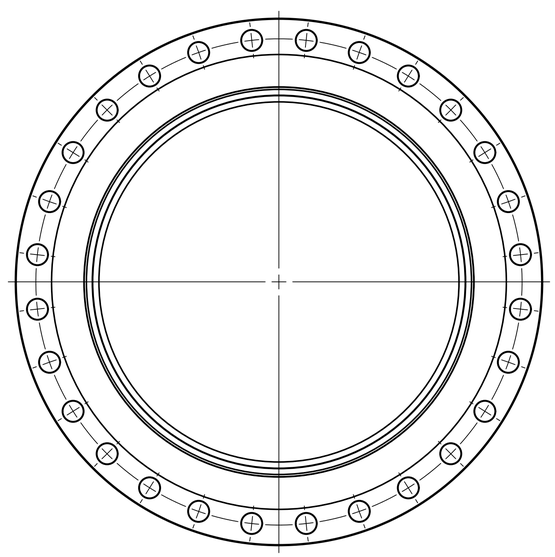

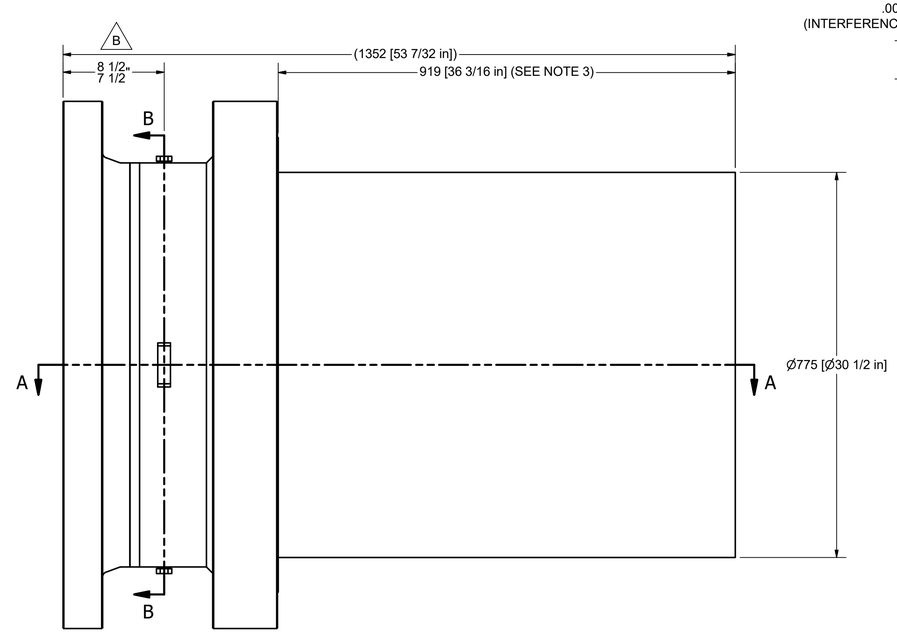

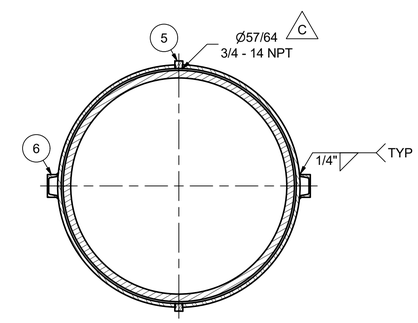

SECTION B-B

NOTES:
1. SPOOL TO BE HYDROTESTED PRIOR TO INSTALLATION OF HCWI LINER.
2. LENGTH OVER FLANGES TO BE DETERMINED BY FIELD MEASUREMENT. 51mm (2") PROVIDED ON FLANGE FACE TO PERMIT MACHINING TO FIELD SPECIFIED LENGTH.
3. LENGTH OF LINER INSERTION TO BE DETERMINED BY FIELD MEASUREMENT.

DESIGN CODE:	ASME B31.3, 2018
SERVICE:	HYDROTRANSPORT SLURRY
DESIGN PRESSURE:	1770 kPag (257 psig)
DESIGN TEMPERATURE:	94°C (201°F)
TEST PRESSURE:	2950 kPag (428 psig)
TEST TEMPERATURE:	15°C (59°F)
TEST DURATION:	10 MINUTES

REFER TO DRAWING A1-00001-100-01 FOR ALL GENERAL NOTES AND SPECIFICATIONS

BILL OF MATERIAL

ITEM	ITEM QTY	PART NUMBER	DESCRIPTION
1	1	A1-19027-300-01 32in pipe	32" XS x 6 1/32" PIPE, API 5L Gr.B
2	1	A1-19027-300-02 32in CL150 RF flange	32" CLASS 150 B16.47 Ser.A RF FLANGE, A350 LF2, 2" THICKER
3	1	A1-19027-300-03 32in CL150 FFWN flange	32" x 3/4" WALL CLASS 150 FFWN FLANGE, A105N
4	1	A1-19027-300-04 HCWI liner - nozzle	28 1/2" ID x 1" WALL x 53 7/32" HCWI NOZZLE LINER, ASTM A532 CLASS III TYPE A, PF# 470289
5	2	ASME B16.11 Hex Head Plug 3/4	3/4"-NPT HEX BULL PLUG, SA234 WPB-S9
6	2	Tag mount - 3in	C3x4.1 x 1", 44W

REVISION HISTORY

REV	DATE	DESCRIPTION	INITIALS
C	2/11/20	ADD PF NUMBERS, HOLE DIMENSION	KLS
B	1/21/20	FLANGE WAS 30" ALCO FLANGE, LENGTH WAS 407mm (16 1/32"), PLUGS WERE AT 8 1/2", NOTE 3 CHANGED, HYDROTEST PRESSURE WAS 2950 kPag (385 psig), UPDATED BoM, ADDED FLOW INDICATOR	GVD
A	1/07/20	ISSUED FOR REVIEW	GVD

THIS DOCUMENT CONTAINS PROPRIETARY INFORMATION AND SHALL NOT BE REPRODUCED NEITHER BE DISCLOSED TO OTHERS FOR MANUFACTURING PURPOSES WITHOUT WRITTEN PERMISSION FROM ALCO INC. OR ITS DIVISIONS.

EST. WT. 2,790 lbs.

UNLESS OTHERWISE SPECIFIED
ALL DIMENSIONS ARE IN INCHES. BREAK ALL SHARP EDGES .01-.03R OR 45°. RADII .05 T.I.R. .010. INTERPRET DWG. PER ANSI Y14.5 STANDARD.
TOLERANCES
X = ± 1/16
X.X = ± .030
X.XX = ± .015
X.XXX = ± .005
ANGLES = ± 1/2°
125 FINISH ON ALL MACHINED SURFACES

DO NOT SCALE

DRAWN BY: GVD	DATE 1/07/20	
CHECKED BY:	DATE	
APPROVED:	DATE	
MATERIAL & HEAT TREAT		

ALCO
ALCO Industrial
2103 - 8 Street,
Nisku, Alberta, Canada T9E 7Y9
Phone: (780) 451-6222 ♦ Fax: (780) 452-4355

TITLE
SPOOL RD-235-2-D-2-1
SYNCRUDE AURORA HT2 MAIN LINE

PROJECT No.	REFERENCE	REV.
A1-19027	RD-235-002-D-002-1 Rev.A4	C

FILE NAME: A1-19027-300-00 RD-235-2-D-2-1.idw
SHEET 1 OF 1