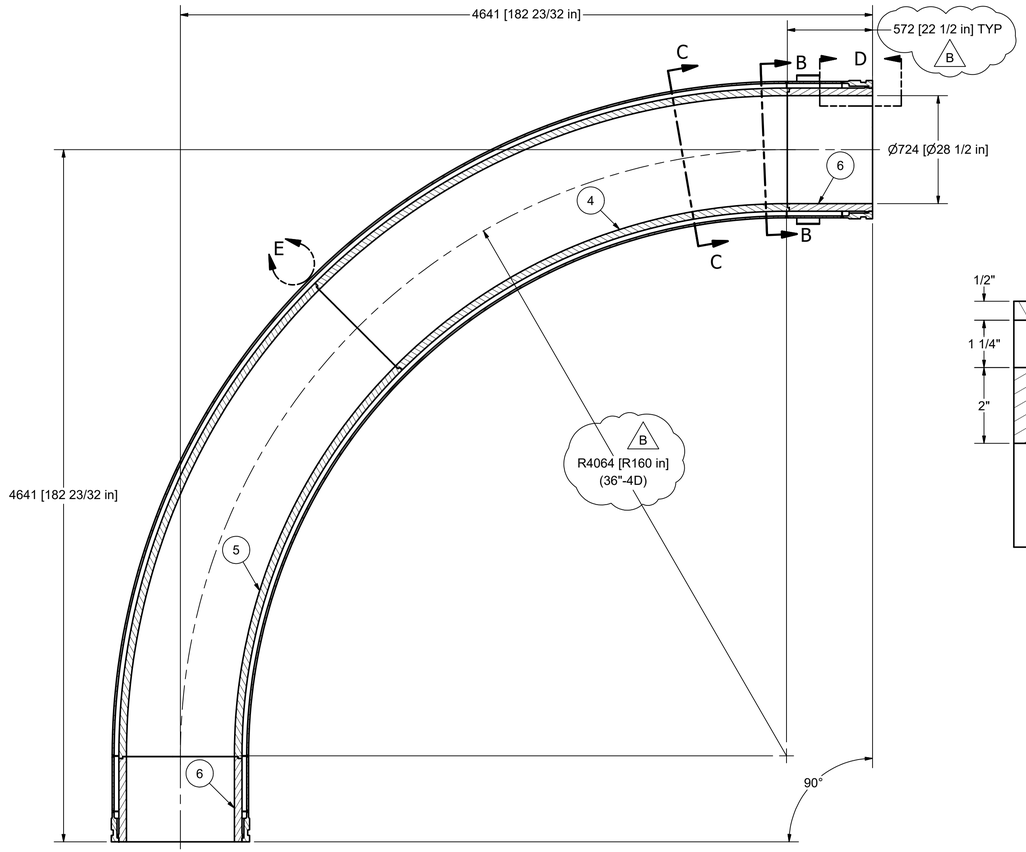


SECTION A-A

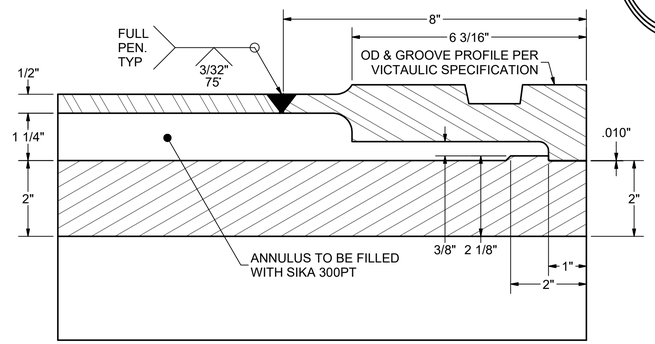


DETAIL D

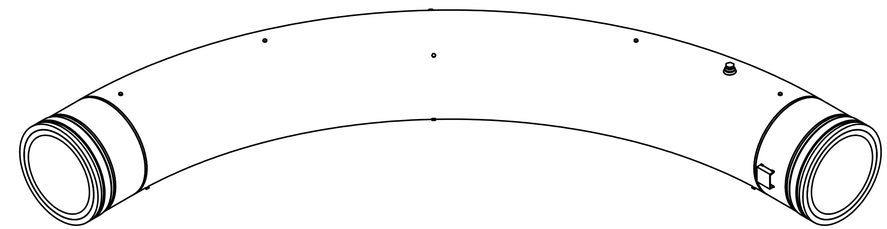

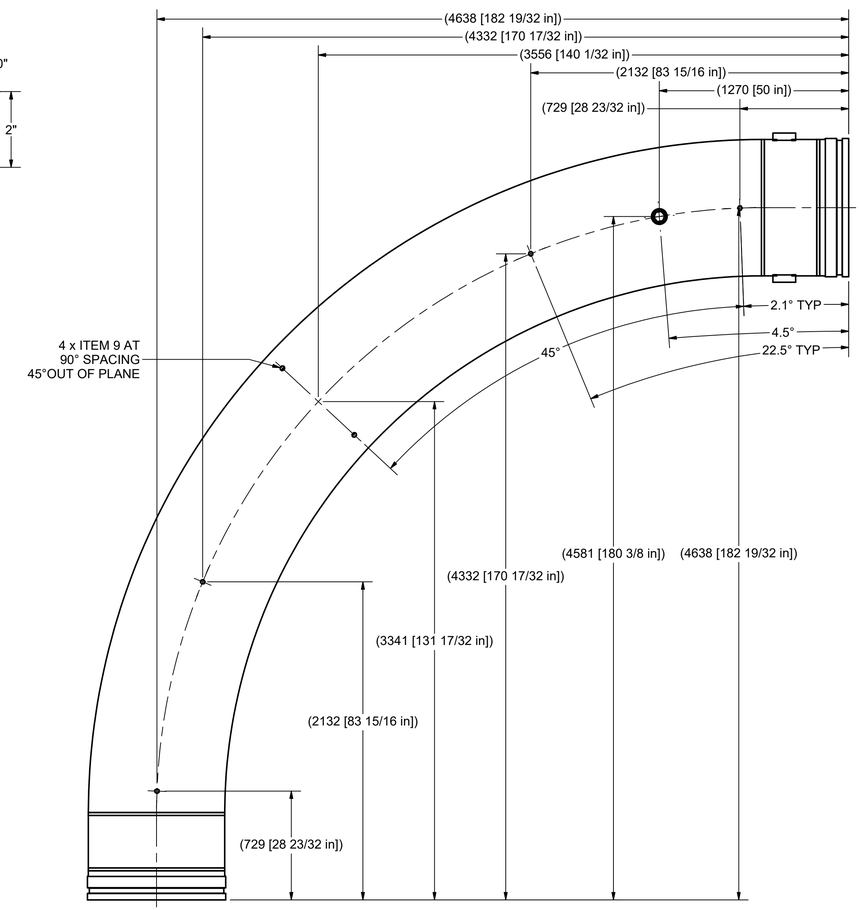


VIEW F-F

DETAIL E

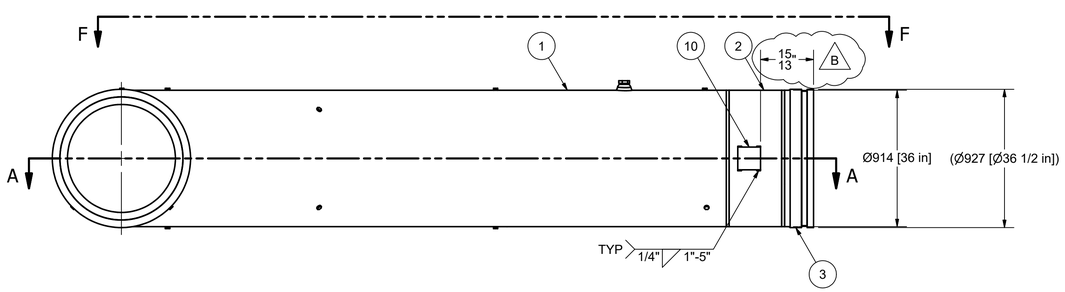


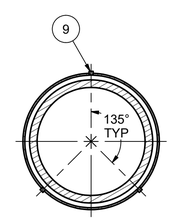


SECTION B-B

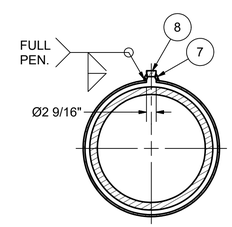


SECTION C-C

| DESIGN CODE: | ASME B31.3, 2018 |
|---|---|
| SERVICE: | HYDROTRANSPORT - SLURRY |
| DESIGN PRESSURE: | 3447 kPag (500 psig) |
| DESIGN TEMPERATURE: | 94°C (201°F) |
| TEST PRESSURE: | 7665 kPag (1112 psig) |
| TEST TEMPERATURE: | 15°C (59°F) |
| TEST DURATION: | 10 MINUTES |

B

BILL OF MATERIAL

| ITEM | ITEM QTY | PART NUMBER | DESCRIPTION |
|---|---|---|---|
| 1 | 1 | A1-19027-100-01 36in elbow | 36" XS x 160" RADIUS x 90° PIPE BEND, API 5L X56 |
| 2 | 2 | A1-19027-100-02 36in pipe | 36" XS x 14 17/32" PIPE, API 5L X56 |
| 3 | 2 | A1-19027-100-03 34in Type B victaulic ring | 34" INVERTED TYPE B VICTAULIC RING FOR 200 SERIES COUPLING, A350 LF2, CUSTOM TYPE B |
| 4 | 1 | A1-19027-100-04 HCWI elbow - male | 28 1/2" ID x 2" WALL x 46° HCWI ELBOW - MALE w/ 23/32" TANGENT, ASTM A532 CLASS III TYPE A, PF#(TBD) |
| 5 | 1 | A1-19027-100-05 HCWI elbow - female | 28 1/2" ID x 2" WALL x 46° HCWI ELBOW - FEMALE w/ 23/32" TANGENT, ASTM A532 CLASS III TYPE A, PF#(TBD) |
| 6 | 2 | A1-19027-100-06 HCWI liner - pup | 28 1/2" ID x 2" WALL x 22 1/2" HCWI LINER PUP, ASTM A532 CLASS III TYPE A, PF#(TBD) |
| 7 | 1 | A1-19027-100-07 2in x 36in threadolet | 2" x 36" CLASS 3000 THREADOLET, A105N |
| 8 | 1 | ASME B16.11 Hex Head Plug 2 | 2"-NPT HEX BULL PLUG, SA234 WPB-S9 |
| 9 | 14 | ASME B16.11 Hex Head Plug 3/4 | 3/4"-NPT HEX BULL PLUG, SA234 WPB-S9 |
| 10 | 2 | Tag mount - 6in | C6x8.2 x 6" [152mm], 44W |
| 11 | - | GROUT | SIKA 300PT |

B

REFER TO DRAWING A1-00001-100-01 FOR
ALL GENERAL NOTES AND SPECIFICATIONS

REVISION HISTORY

| REV | DATE | DESCRIPTION | INITIALS |
|---|---|---|---|
| B | 1/21/20 | BEND RADIUS WAS 3658mm (144"), MODIFIED TANGENT LENGTHS TO SUIT, TAG MOUNT WAS 18"/16", HYDROTEST PRESSURE WAS 5171 kPag (750 psig), UPDATED BoM | GVD |
| A | 1/07/20 | ISSUED FOR REVIEW | GVD |

THIS DOCUMENT CONTAINS PROPRIETARY INFORMATION AND SHALL NOT BE COPIED, NEITHER BE DISCLOSED TO OTHERS FOR ANY OTHER PURPOSE THAN THE MANUFACTURING PURPOSES WITHOUT WRITTEN PERMISSION OF ALCO INC. OR ITS DIVISIONS.

EST. WT. 24,305 lbs.

UNLESS OTHERWISE SPECIFIED
ALL DIMENSIONS ARE IN INCHES. BREAK ALL SHARP EDGES .01-.03R OR 45°. RADII .05 T.I.R. .010. INTERPRET DWG PER ANSI Y14.5 STANDARD.

TOLERANCES
X = ± 1/16
X.X = ± .030
X.XX = ± .015
X.XXX = ± .005
ANGLES = ± 1/2°

125 FINISH ON ALL MACHINED SURFACES

DO NOT SCALE

| | | |
|---|---|---|
| DRAWN BY: GVD | DATE 1/07/20 | |
| CHECKED BY: | DATE | |
| APPROVED: | DATE | |
| MATERIAL & HEAT TREAT | | |

ALCO Industrial
2103 - 8 Street,
Nisku, Alberta, Canada T9E 7Y9
Phone: (780) 451-6222 ♦ Fax: (780) 452-4355

TITLE
SPOOL SP-237-2-P-126-1-B
SYNCRUDE AURORA HT2 MAIN LINE

| PROJECT No. | REFERENCE | REV |
|---|---|---|
| A1-19027 | SP-237-2-P-126-1-B Rev.A | B |

FILE NAME: A1-19027-100-00 SP-237-2-P-126-1-B.idw
SHEET 1 OF 1