U_L298N
L298N.SchDoc

U_LM2596
LM2596.SchDoc

U_stm32
stm32.SchDoc

| | | |
|---|---|---|
| Title | | |
| Size A4 | Number | Revision |
| Date: 12/31/2025 | | Sheet of |
| File: H:\altium\xe2banhfix\main.SchDoc | | Drawn By: |

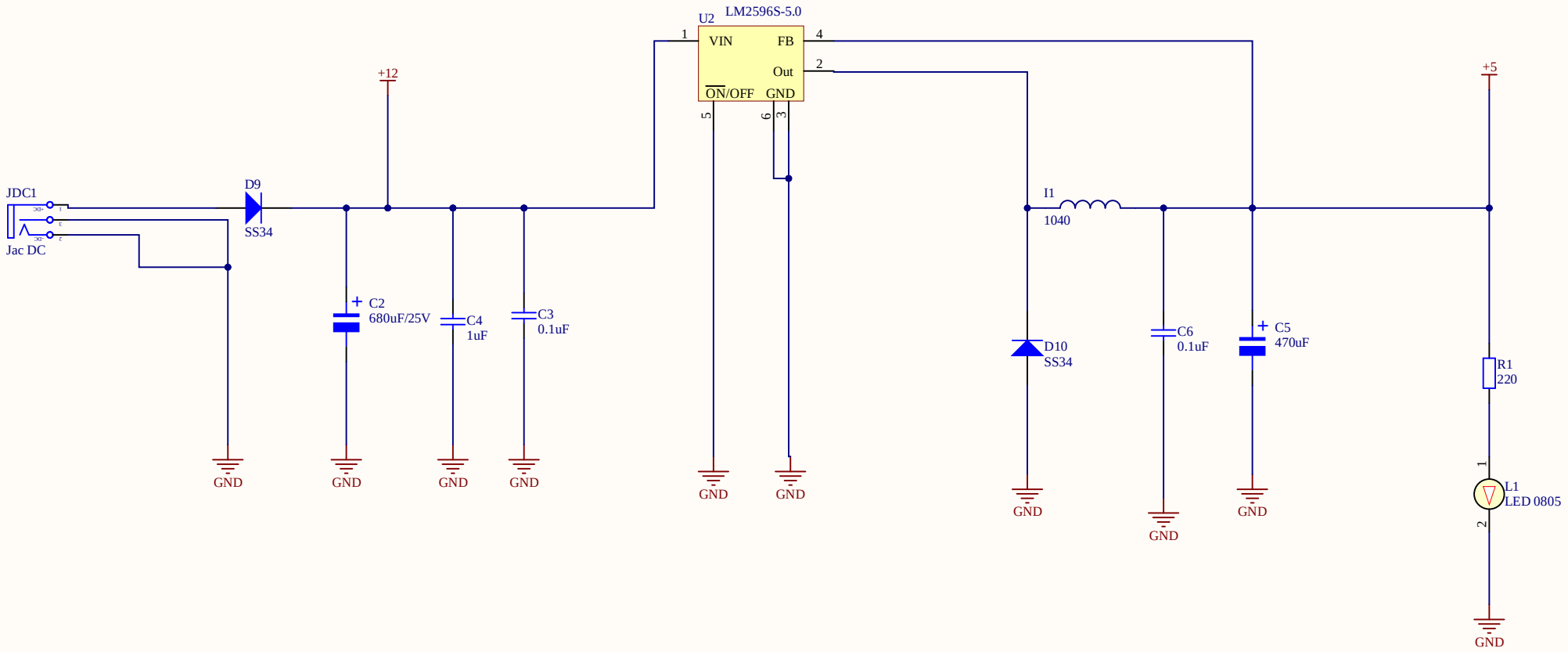


| Title | | |
|---|---|---|
| Size A4 | Number | Revision |
| Date: 12/31/2025 | | Sheet of |
| File: H:\altium\xe2banhfix\LM2596.SchDoc | | Drawn By: |

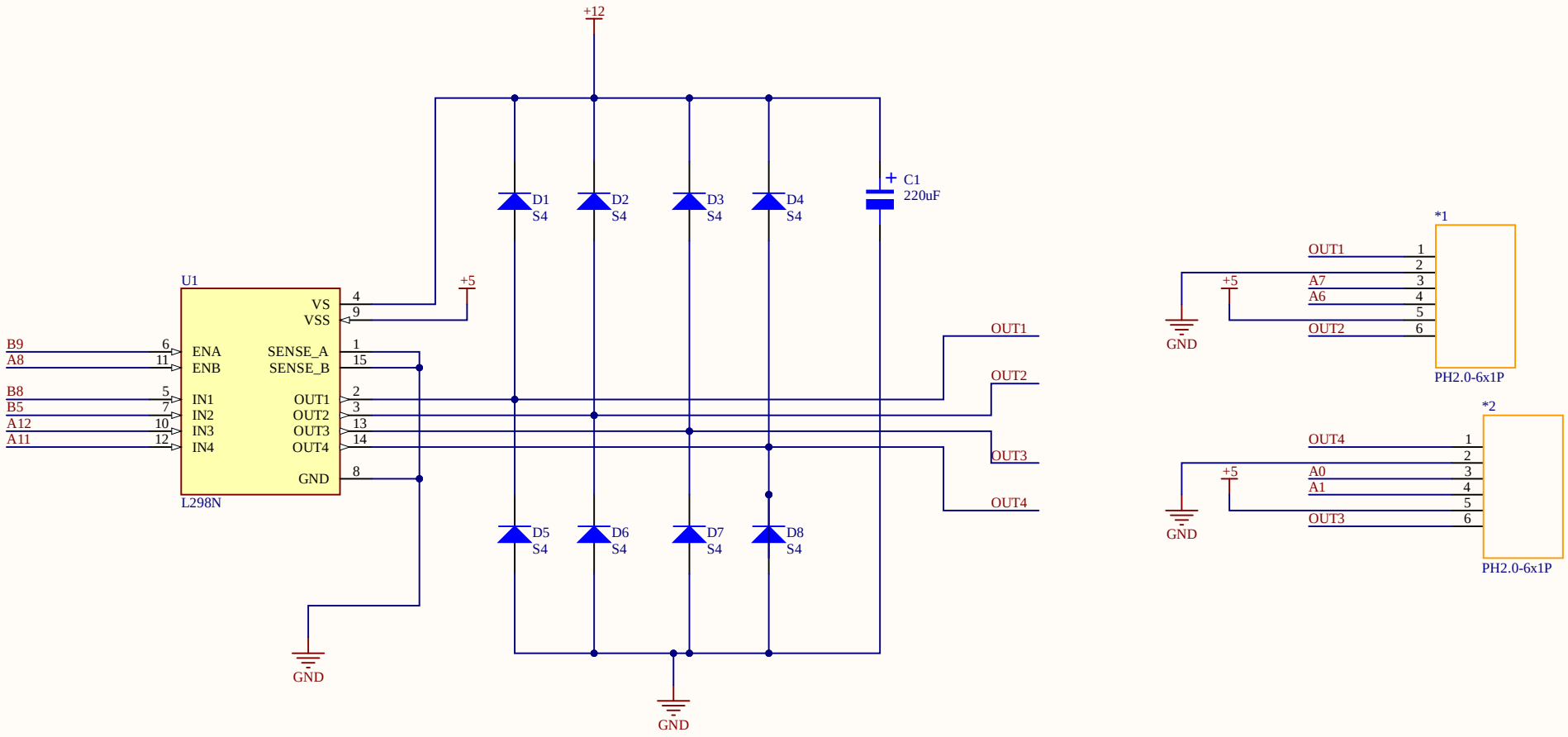


| Title | | |
|---|---|---|
| Size A4 | Number | Revision |
| Date: 12/31/2025 | | Sheet of |
| File: H:\altium\xe2banhfix\L298N.SchDoc | | Drawn By: |

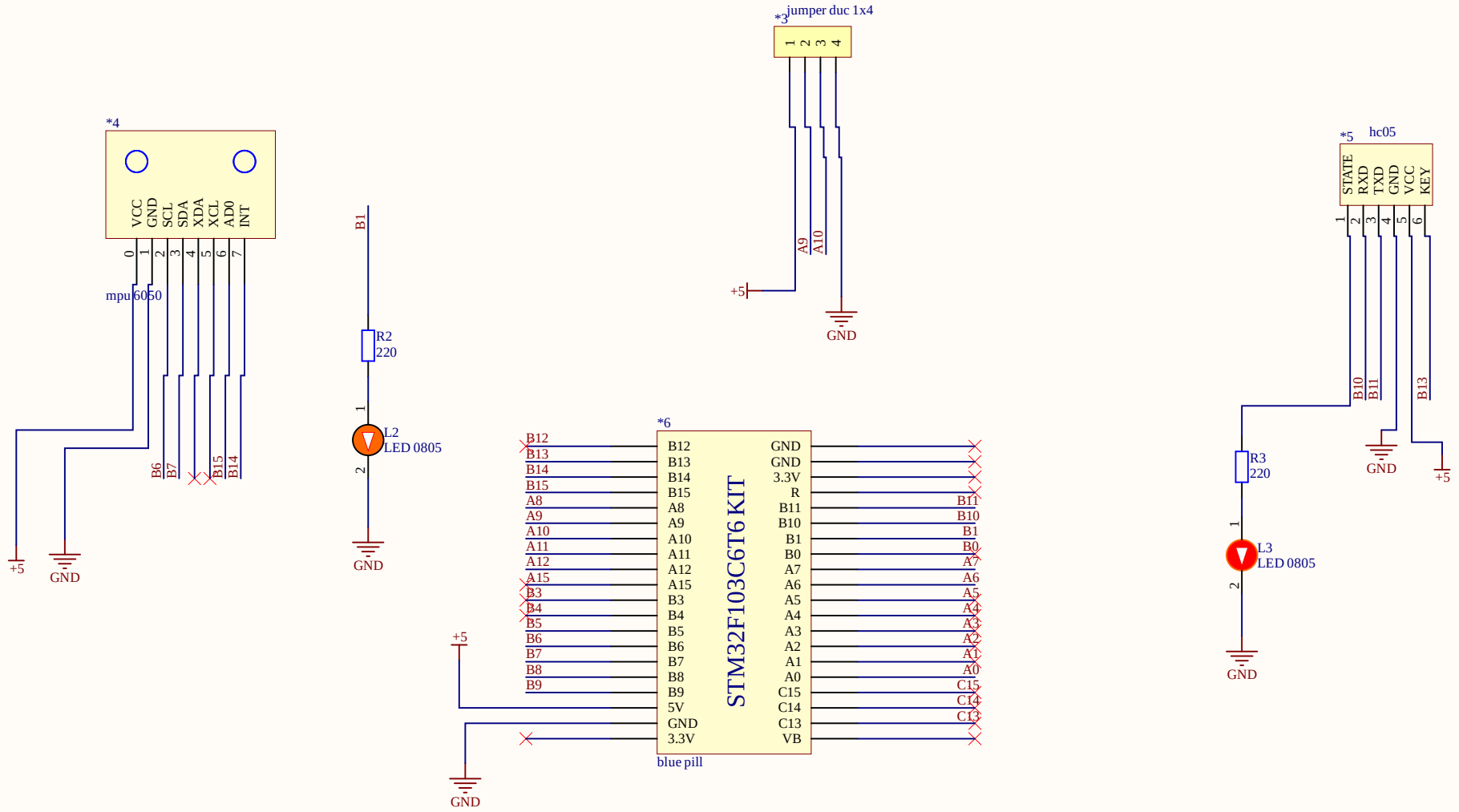


| Title | | |
|---|---|---|
| Size A4 | Number | Revision |
| Date: 12/31/2025 | | Sheet of |
| File: H:\altium\xe2banhfix\stm32.SchDoc | | Drawn By: |