Submittal #497

FO-INTEG-PROJECT-PO0001-REV.03 Gestión de Control de Calidad / Quality Management

Information

Status: In Review

P.R.S

Legend
Overdue Issue On Time Delayed Start Inactive

Company: Integ Miami LLC

Project (CDC) - Job Number 513-P-E-GATOR RUN ES - 26JUN2020

Customer Name Burke Construction Group Inc

Project (CDC) - Customer Name

Project (CDC) - Location

Submittal

Description: SECTION 16130 (26 05 33)

- Rigid metal conduit
- Electrical metallic tubing (emt)
- Flexible metal conduit
- Boxes and accessories

Title: SECTION 16130 (26 05 33)

Spec Section: SECTION 16130 (26 05 33) 2.1.A.1, 2.2.A.1, 2.3.B 2.6.A, 2.6.B, 2.6.C

Subdivision: Electrical

Submittal Type : Product Data

Submitted On: 21-07-2020

Responsible Contractor:

Submittal Manager: Henry Palma

Issue Date: 21-07-2020 12:00 AM

Final Due Date:

Ball in Court: Integ

Lead Time 1

Priority: Intermedium

Attachment

Attachment:

Linked Drawings:

Notes:

Stamp Info

Stamp Date:

Other Name:

☐ **Show Stamp on PDF:**

Submittal WorkFlow

Add Submittal LOG

Submittal logs

Record ID#	Submittal # - Project (CDC) - CDC (Centro de Costo)	Submittal # - Status:	Submittal Status	Submittal # - Description:	Related Submittal #	Date Submittal REV	Comments:	Attachment Document:

Record ID#	Submittal # - Project (CDC) - CDC (Centro de Costo)	Submittal # - Status:	Submittal Status	Submittal # - Description:	Related Submittal #	Date Submittal REV	Comments:	Attachment Document:
476	513-P-E-GATOR RUN ES - 26JUN2020	**In Review**	Rev 0	SECTION 16130 (26 05 33) • Rigid metal conduit • Electrical metallic tubing (emt) • Flexible metal conduit • Boxes and accessories	497	21-07-2020		

Submittal Approval

☐ **Approval** **Approvers:** **Name/Title:**

Signature _____

This submittal has an approval time of 15 days. After this period of time elapses and no response has been provided from the Engineer/GC, Integ reserves the right to assume that the submittal has been approved.

Responsible Henry Palma

Rp Email Project M. Asistant

Created today at 8:47 AM (PDT). Last updated by Project M. Asistant today at 8:51 AM (PDT). Owned by Project M. Asistant.

Galvanized Rigid Conduit (GRC) and Kwik-Couple® GRC

allied TUBE & CONDUIT®
A PART OF atkore INTERNATIONAL

Galvanized Rigid Conduit (GRC)

- Hot-dip galvanized for excellent corrosion resistance
- High strength ductile steel for long life and easy bending
- Smooth, continuous raceways for fast wire pulling
- Kwik-Release End Cap to protect threads
- True Color™ GRC special orders available
- Listed to Safety Standard UL 6
- Manufactured in accordance with ANSI C80.1
- Available in sizes 1/2 (16) - 6 (155)

Quality, Long Lasting Heavy Duty Steel Conduit

Kwik-Couple Galvanized Rigid Conduit (GRC)

- Similar Benefits to standard GRC Conduit*
- Factory installed Kwik-Couple™ couplings are available on GRC conduit

  Just line up the ends, spin the coupling forward onto the next piece and wrench tighten. It's that easy!
- No separate couplings to purchase, inventory or install
- Kwik-Release End Cap to protect threads
- True Color™ Kwik-Couple® GRC special orders available
- Manufactured in accordance with ANSI C80.1
- Available in sizes 2 1/2 (63) - 5 (129)

*Kwik-Couple GRC does not contain a listing for wet locations and is not approved for Class I Division I locations.

Chart on the following page

Kwik-Couple Rigid Elbows

- Also available with pre-installed Kwik-Couple Couplings
- Made to order, contact us for lead times

For Faster Installations Use the Kwik-Couple GRC Connection

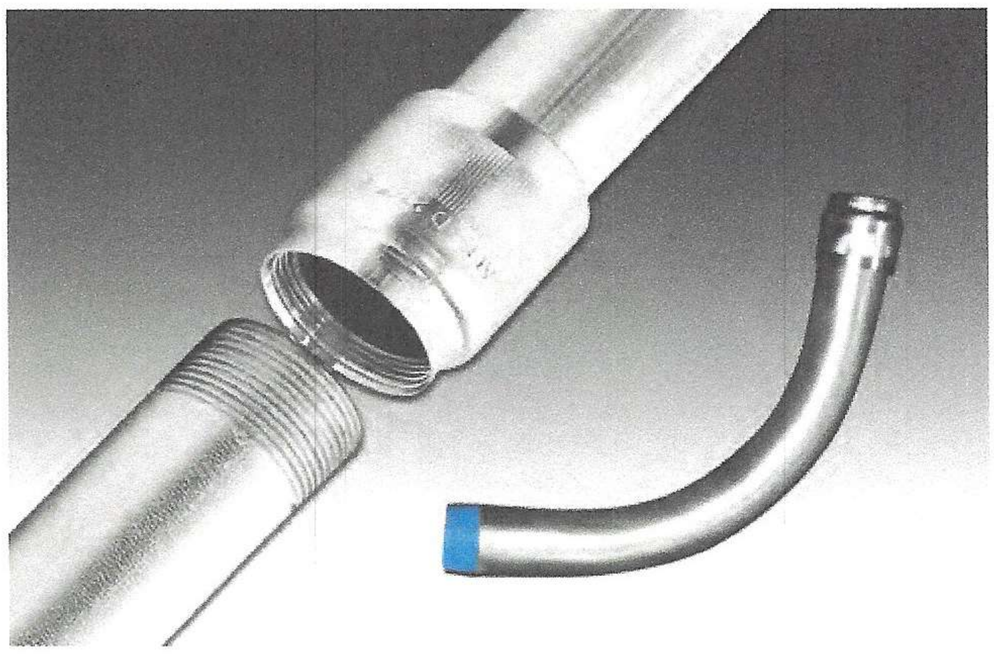

* U.S. Patent Numbers 7,404,582 and 7,726,001.

Galvanized Rigid Conduit (GRC)

Listed to UL 6, manufactured in accordance with ANSI C80.1

Trade Size	Metric Designator	Outside Diameter[1]		Nominal Wall Thickness[2]		Approximate Weight Per 100 Ft. (30.5M)		Quantity in Master Bundle*	
		in	mm	in	mm	lb	kg	ft	m
1/2	16	0.840	21.34	0.104	2.64	82	37.2	2500	762.5
3/4	21	1.050	26.67	0.107	2.72	109	49.4	2000	610.0
1	27	1.315	33.40	0.126	3.20	161	73.0	1250	381.3
1 1/4	35	1.660	42.16	0.133	3.38	218	98.9	900	274.5
1 1/2	41	1.900	48.26	0.138	3.51	263	119.3	800	244.0
2	53	2.375	60.33	0.146	3.71	350	158.8	600	183.0
2 1/2	63	2.875	73.03	0.193	4.90	559	253.6	370	112.9
3	78	3.500	88.90	0.205	5.21	727	329.8	300	91.5
3 1/2	91	4.000	101.60	0.215	5.46	880	399.2	250	76.3
4	103	4.500	114.30	0.225	5.72	1030	467.2	200	61.0
5	129	5.563	141.30	0.245	6.22	1520	689.5	150	45.8
6	155	6.625	168.28	0.266	6.76	1785	809.7	100	30.5

[1] Tolerances: Trade Size 1/2 to 1-1/2: ±0.015" (0.38mm); Trade Size 2-6: ±1%
Length equals 10 ft. (3.05m) with a tolerance of +/- .25 in. (6.35mm)
[2] For information only. Not a requirement of the UL standard.
* NEMA RN-3 Standard

Project Information

Company Name: _____
Address: _____
City: _____
State & Zip: _____
Phone: _____
Project Name: _____
City: _____
State: _____

NOTE: Special orders are non-cancelable, non-returnable and non-refundable

Galvanized Rigid Conduit (GRC) Couplings & Elbows

allied TUBE & CONDUIT®
A PART OF atkore INTERNATIONAL

Galvanized Rigid Conduit (GRC) Couplings

Manufactured to Underwriters Laboratory Safety Standards UL 6
Manufactured in accordance with ANSI C80.1

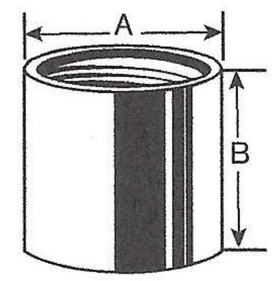

Trade Size	Metric Designator	Nominal O.D. (A)[2]		Length (B)[1]		Threads Per Inch[1]	Approximate Weight Per 100 Pieces		Standard Package
		in	mm	in	mm		lb	kg	
1/2	16	1.01	25.7	1 5/8	41.3	14	12	5.4	100
3/4	21	1.25	31.8	1 41/64	41.7	14	18	8.2	50
1	27	1.53	38.7	1 31/32	50.0	11 1/2	30	13.6	30
1 1/4	35	1.87	47.5	2 1/32	51.6	11 1/2	37	16.8	25
1 1/2	41	2.16	54.7	2 1/16	52.4	11 1/2	52	23.6	25
2	53	2.65	67.3	2 1/8	54.0	11 1/2	72	32.7	20
2 1/2	63	3.25	82.6	3 3/16	81.0	8	170	77.1	1
3	78	3.87	98.3	3 5/16	84.1	8	210	95.3	1
3 1/2	91	4.50	114.3	3 13/32	86.5	8	340	154.2	1
4	103	4.88	123.8	3 33/64	89.3	8	300	136.1	1
5	129	6.00	152.4	3 61/64	100.4	8	475	215.5	1
6	155	7.20	182.9	4 1/4	108.0	8	765	347.0	1

[1]Mimimum requirement as per UL Standard

Galvanized Rigid Conduit (GRC) 90 Degree Elbows

Listed to UL Safety Standard 6
Manufactured in accordance with ANSI C80.1

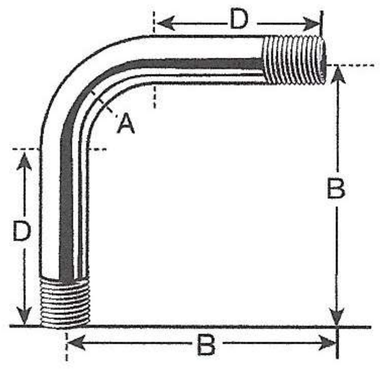

Trade Size	Metric Designator	Radius (A)[1]		Offset (B)[2]		Straight (D)[1]		Approximate Weight Per 100 Pieces		Standard Package
		in	mm	in	mm	in	mm	lb	kg	
1/2	16	4	102	5 7/8	149	1 1/2	38	68	30.8	50
3/4	21	4 1/2	114	7	178	1 1/2	38	109	49.4	50
1	27	5 3/4	146	8 3/4	222	1 7/8	48	201	91.2	25
1 1/4	35	7 1/4	184	10 3/4	273	2	51	336	152.4	20
1 1/2	41	8 1/4	210	12 1/4	311	2	51	460	208.7	15
2	53	9 1/2	241	14 1/2	368	2	51	729	330.7	10
2 1/2	63	10 1/2	267	17	432	3	76	1374	623.2	1
3	78	13	330	19 5/8	498	3 1/8	79	2045	927.6	1
3 1/2	91	15	381	22 3/4	578	3 1/4	83	2860	1297.3	1
4	103	16	406	23 7/8	606	3 3/8	86	3519	1596.2	1
5	129	24	610	34 7/8	886	3 5/8	92	6942	3148.9	1
6	155	30	762	45 1/2	1156	3 3/4	95	11960	5425.1	1

[1]Mimimum requirement as per UL Standard
[2]For information only, not a requirement as per UL Standard
Sizes 2 1/2 (63) and larger shipped in palletized cartons or bulk.
Also available in the following Degrees (60°, 45°, 30°, 22-1/2°, 15° & 11-1/4°)

KWIK-COUPLE ELBOWS AVAILABLE
by special order in Trade Size 2-1/2 to 5

NOTE: Special orders are non-cancelable, non-returnable and non-refundable

16100 S. Lathrop Ave., Harvey, IL 60426
Phone / 708.339.1610 • Toll-Free / 800.882.5543
www.alliedeg.com

Galvanized Rigid Conduit (GRC) Elbows & Nipples

allied TUBE & CONDUIT®

A PART OF atkore INTERNATIONAL

Galvanized Rigid Conduit (GRC) Large Radius 90 Degree Elbows (continued)

Listed to UL Safety Standard 6
Manufactured in accordance with ANSI C80.1

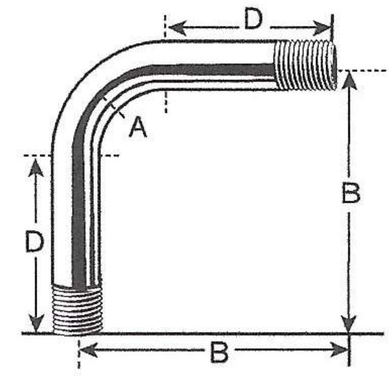

Trade Size	Metric Designator	Radius (A)		Offset (B)[2]		Straight (D)[2]		Approximate Weight Per 100 Pieces	
		in	mm	in	mm	in	mm	lb	kg
5	129	36	914	50 3/4	1289	14 3/4	375	10033	4551.0
5	129	48	1219	65 1/4	1657	17 1/4	438	12833	5821.0
5	129	60	1524	75 7/8	1927	15 7/8	403	14700	6667.9
6	155	36	914	50 3/4	1289	14 3/4	375	13187	5981.6
6	155	48	1219	65 1/4	1657	17 1/4	438	16867	7650.9
6	155	60	1524	75 7/8	1927	15 7/8	403	19320	8763.6

[2]For information only, not a requirement as per UL Standard
Shipped in palletized cartons or bulk.
Also available in the following Degrees (60°, 45°, 30°, 22-1/2°, 15° & 11-1/4°)

KWIK-COUPLE AVAILABLE
Trade Size 2-1/2 to 5 by special order

Galvanized Rigid Conduit (GRC) Nipples

Listed to UL Safety Standard 6
Manufactured in accordance with ANSI C80.1

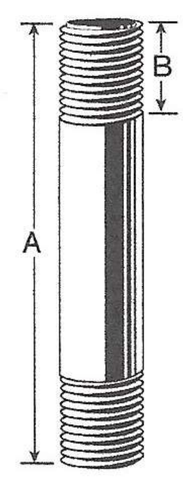

Trade Size	Metric Designator	Length (A)		Total Thread Length (B)[1]		Threads Per Inch[1]	Approximate Weight Per 100 Pieces		Standard Package
		in	mm	in	mm		lb	kg	
1/2	16	(Close) 1 1/8	29	0.78	19.8	14	6	2.7	25
1/2	16	1 1/2	38	0.78	19.8	14	8	3.6	25
1/2	16	2	51	0.78	19.8	14	12	5.4	25
1/2	16	2 1/2	64	0.78	19.8	14	15	6.8	25
1/2	16	3	76	0.78	19.8	14	19	8.6	25
1/2	16	3 1/2	89	0.78	19.8	14	22	10.0	25
1/2	16	4	102	0.78	19.8	14	26	11.8	25
1/2	16	5	127	0.78	19.8	14	33	15.0	25
1/2	16	6	152	0.78	19.8	14	40	18.1	25
1/2	16	8	203	0.78	19.8	14	54	24.5	25
1/2	16	10	254	0.78	19.8	14	68	30.8	25
1/2	16	12	305	0.78	19.8	14	82	37.2	25
3/4	21	(Close) 1 3/8	35	0.79	20.1	14	9	4.1	25
3/4	21	1 1/2	38	0.79	20.1	14	10	4.5	25
3/4	21	2	51	0.79	20.1	14	14	6.4	25
3/4	21	2 1/2	64	0.79	20.1	14	19	8.6	25
3/4	21	3	76	0.79	20.1	14	24	10.9	25
3/4	21	3 1/2	89	0.79	20.1	14	28	12.7	25
3/4	21	4	102	0.79	20.1	14	34	15.4	25
3/4	21	5	127	0.79	20.1	14	43	19.5	25
3/4	21	6	152	0.79	20.1	14	52	23.6	25
3/4	21	8	203	0.79	20.1	14	73	33.1	25
3/4	21	10	254	0.79	20.1	14	89	40.4	25
3/4	21	12	305	0.79	20.1	14	109	49.4	25

[1]Mimimum requirement as per UL Standard
A tolerance of minus one thread applies to Total length of Thread

Chart continued on the next page

NOTE: Special orders are non-cancelable, non-returnable and non-refundable

16100 S. Lathrop Ave., Harvey, IL 60426
Phone / 708.339.1610 • Toll-Free / 800.882.5543

Rigid/Intermediate Grade Conduit Fittings

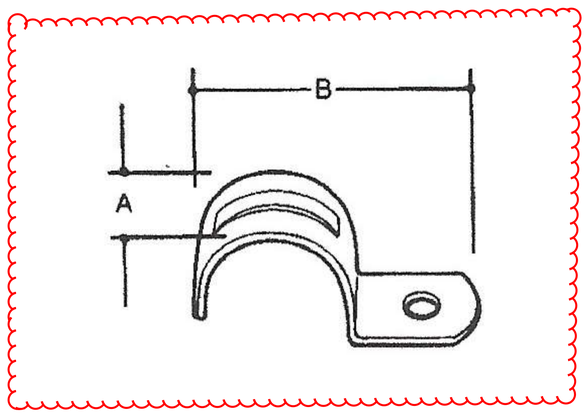

One Hole Straps – Steel/Zinc Plated

Cat. No.	Screw Size	Conduit Size	A	B	Std. Ctn.
HS-100-SC	10	3/8"	3/4"	1 47/64"	1000
HS-101	1/4	1/2"	1"	1 15/16"	500
HS-102	1/4	3/4"	1"	2 5/64"	500
HS-103	1/4	1"	1"	2 13/32"	250
HS-104	5/16	1 1/4"	1"	3 3/32"	100
HS-105	3/8	1 1/2"	1 3/16"	3 13/32"	100
HS-106	3/8	2"	1 3/16"	3 27/32"	100
HS-107	7/16	2 1/2"	1 1/4"	5 1/16"	25
HS-108	1/2	3"	1 3/8"	5 7/8	25
HS-109	1/2	3 1/2"	1 3/8"	6 1/4"	10
HS-110	1/2	4"	1 3/8"	6 7/8"	10

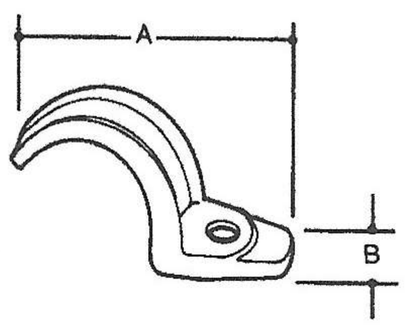

Pipe Straps – Malleable Iron/Zinc Plated

Cat. No.	Screw Size	Conduit Size	A	B	Std. Ctn.
HS-400	10	3/8"	1 11/16"	17/32"	500
HS-401	1/4	1/2"	2 1/64"	5/8"	500
HS-402	1/4	3/4"	2 7/16"	13/16"	500
HS-403	1/4	1"	2 7/8"	15/16"	100
HS-404-SC	5/16	1 1/4"	3 5/16"	1 1/32"	100
HS-405	3/8	1 1/2"	3 3/4"	1 1/8"	50
HS-406	1/2	2"	4 19/32"	1 5/16"	25
HS-407	5/8	2 1/2"	5 11/16"	1 5/8"	25
HS-408	5/8	3"	6 7/8"	1 7/8"	25
HS-409	5/8	3 1/2"	7 23/32"	2 1/8"	10
HS-410	5/8	4"	8 9/16"	2 3/8"	10
HS-411	5/8	5"	10 9/32"	2 5/8"	5

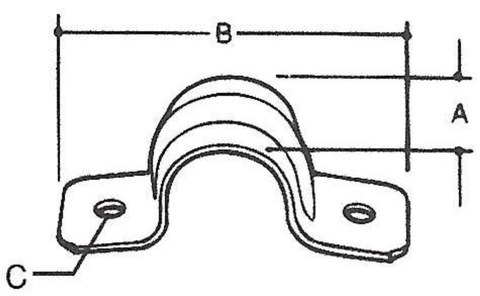

Two Hole Strap – Steel/Zinc Plated

Cat. No.	Screw Size	Conduit Size	A	B	C	Std. Ctn.
HS-901	8	1/2"	3/4"	2 7/16"	3/16"	1200
HS-902	10	3/4"	3/4"	2 11/16"	3/16"	900
HS-903	1/4	1"	3/4"	3 7/16"	3/16"	600
HS-904	1/4	1 1/4"	3/4"	3 27/32"	3/16"	450
HS-905	1/4	1 1/2"	3/4"	4 1/16"	3/16"	50
HS-906	1/4	2"	3/4"	4 7/16"	3/16"	150
HS-907	1/4	2 1/2"	1"	5 1/8"	1/4"	150
HS-908	1/2	3"	1"	6 3/16"	1/4"	60
HS-909	1/4	3 1/2"	1"	7 3/16"	1/4"	60
HS-910	1/4	4"	1"	8 11/16"	1/4"	60

CSA Certified

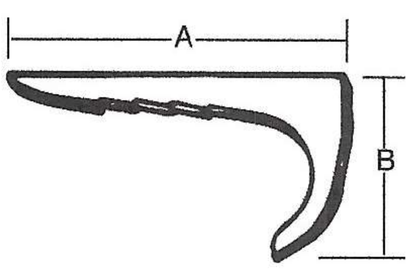

Nail Strap – Stamped Steel/Zinc Plated

Cat. No.	Rigid/MC Size	EMT Size	Flex Size	A	B	Std. Ctn.
N-101-SC	–	1/2"	3/8"	2 5/32"	1 5/64"	1000
N-102-SC	1/2"	3/4"	1/2"	2 5/16"	1 7/32"	1000
N-103-SC	3/4"	1"	–	2 3/8"	1 15/32"	1000

© 2003 Thomas & Betts Corporation. Specifications are subject to change without notice. www.tnb.com

Rigid/Intermediate Grade Conduit Fittings

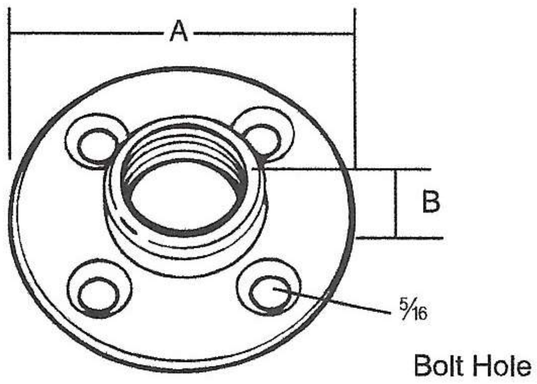

Flange Plates – Malleable Iron/Zinc Plated

Cat. No.	Conduit Size	Dia. A	Depth B	Std. Ctn.
FP-401	½"	3"	.625	50
FP-402	¾"	3⅜"	.656	50
FP-403	1"	3⅝"	.765	50
FP-404	1¼"	4"	.875	25
FP-405	1½"	4⅜"	.937	25
FP-406	2"	4⅞"	.843	25

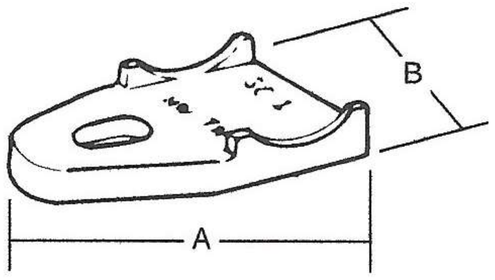

Pipe Spacers for Rigid/Intermediate or Thinwall – Die Cast Zinc

Cat. No.	Conduit Size	A	B	Std. Ctn.
CB-201	½"	2"	1"	1000
CB-202	¾"	2⅜"	1 1/16"	500
CB-203	1"	2¾"	1 5/16"	500
CB-204	1¼"	3⅜"	1½"	250
CB-205	1½"	3 13/16"	1⅝"	100
CB-206	2"	4½"	2"	50

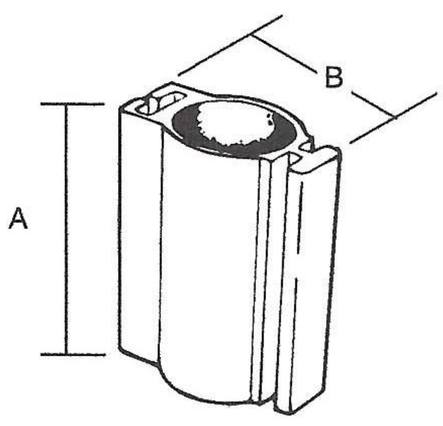

Rigid/Intermediate Space Caps – Plastic

Cat. No.	Conduit Size	A	B	Std. Ctn.
BR-501	½"	2 15/32"	1 21/32"	100
BR-502	¾"	2 15/32"	1 55/64"	100
BR-503	1"	2 15/32"	2⅛"	100
BR-504	1¼"	2 15/32"	2 61/64"	100
BR-505	1½"	2 15/32"	3 13/64"	100

© 2003 Thomas & Betts Corporation. Specifications are subject to change without notice. **www.tnb.com**

Steel City®

Conduit and Pipe Hangers

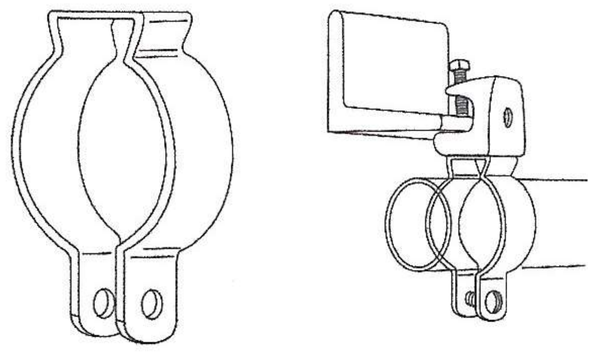

Without Bolt

All Steel City 6H Hanger Bolts include a combination Slot-Phillips Head.

For hanging conduit (rigid or EMT) and pipe. The 6H series hangers are fast, easy and economical to use. May be fastened directly to a #500 beam clamp through a hole in the base of the hanger by means of a ¼-20 stove bolt or suspended on ¼" hanger rod.

6H Series Conduit and Pipe Hangers – Without Bolt

Cat. No.	Size (in.) Rigid Conduit or Pipe	EMT	Dimensions (in.) A	B	C	D (dia.)	Load Rating	Std. Ctn.
6H0	⅜ - ½	½	¾	.045	1 21/32	9/32	500	100
6H0-T	⅜ - ½	½	¾	.045	1 27/32	9/32	500	100
6H1	¾	¾	⅞	.045	1 31/32	9/32	500	100
6H1-T	¾	¾	⅞	.045	2 9/32	9/32	500	100
6H2	1	1	⅞	.045	2⅜	9/32	500	100
6H2-1/2	–	1¼	⅞	.045	2 23/32	9/32	500	100
6H3-SC	1¼	1½	⅞	.045	2⅞	9/32	500	100
6H4	1½	–	1	.071	3⅜	11/32	500	100
6H5	2	2	1¼	.071	3 29/32	11/32	500	50
6H6	2½	–	1¼	.071	4 9/32	11/32	500	50
6H7	3	–	1¼	.071	5 3/16	11/32	500	25
6H8	3½	–	1¼	.071	5 7/16	11/32	500	25
6H9	4	4	1¼	.071	5⅞	11/32	500	10

* Add SS suffix to part number for stainless steel.

Load rating is 500 lbs. with a safety factor of 3. Available with or without closure bolt. Standard finishes: electrogalvanized and Type 302 Stainless Steel.

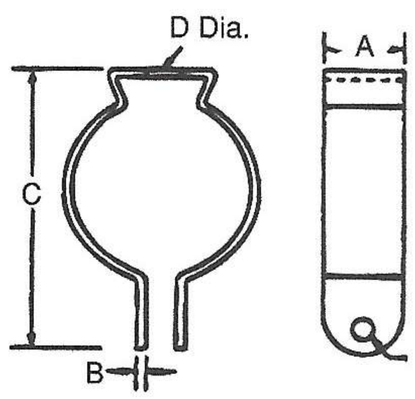

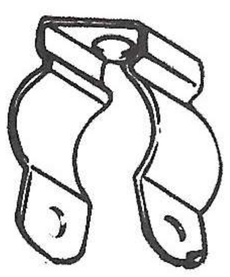

6H
Without bolt.

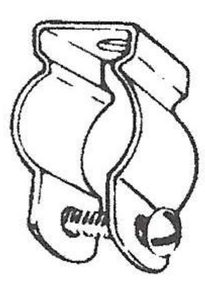

6H-B
With bolt and hex nut.

6H-T
Threaded without bolt.

6H-TB
Threaded with bolt.

6H Series Conduit and Pipe Hangers – With Bolt

Cat. No.	Size (in.) Rigid Conduit or Pipe	EMT	Dimensions (in.) A	B	C	D (dia.)	Load Rating	Std. Ctn.
6H0-B	⅜ - ½	½	¾	.045	1 21/32	9/32	500	100
6H0-TB	⅜ - ½	½	¾	.045	1 27/32	9/32	500	100
6H1-B	¾	¾	⅞	.045	1 31/32	9/32	500	100
6H1-TB	¾	¾	⅞	.045	2 9/32	9/32	500	100
6H2-B	1	1	⅞	.045	2⅜	9/32	500	100
6H2-1/2-B	–	1¼	⅞	.045	2 23/32	9/32	500	100
6H3-SC-B	1¼	1½	⅞	.045	2⅞	9/32	500	100
6H4-B	1½	–	1	.071	3⅜	11/32	500	100
6H5-B	2	2	1¼	.071	3 29/32	11/32	500	50
6H6-B	2½	–	1¼	.071	4 9/32	11/32	500	50
6H7-B	3	–	1¼	.071	5 3/16	11/32	500	25
6H8-B	3½	–	1¼	.071	5 7/16	11/32	500	25
6H9-B	4	4	1¼	.071	5⅞	11/32	500	10

* Add SS suffix to part number for stainless steel. (not UL listed.)

Load rating is 500 lbs. with a safety factor of 3. Available with or without closure bolt. Standard finishes: electrogalvanized and Type 302 Stainless Steel.

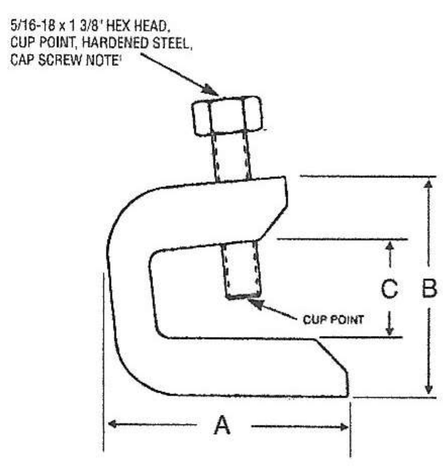

Beam Clamp

Cat. No.	Size	Tapped	Std. Ctn.
BC1-TB	1	¼-20	250
BC2-TB	2 15/16	⅜-16	–

Material: Steel
Finish: Zinc Plated

Thomas&Betts

© 2002 Thomas & Betts Corporation. Specifications are subject to change without notice. www.tnb.com

Steel City®

Beam Clamps/Threaded Rod/Rod Coupling

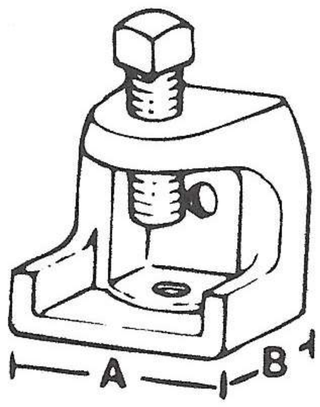

Beam Clamps – Malleable Iron, Electroplated Finish

Cat. No.	Base Size Inches A	Base Size Inches B	Jaw Opening Inches	Tapping of Base and Back Holes	Load Rating‡	Std. Ctn.
510	27/32	1⅛	⅝	¼-20	400	100
511-SC	27/32	1⅛	⅝	10-24	400	100
500-SC	1	1¼	15/16	¼-20	450	50
509	1	1¼	15/16	10-24	375	100
501	1½	1⅝	⅞	5/16-18	800	50
502	2	2	1	⅜-16	1300	50
503-SC	2⅝	2½	1	½-13	1300	20
507	2½	2⅜	1⅜	½-13	1700	20
508	2½	2⅜	2⅛	½-13	1700	10

‡Safety Factor of 3.
Loan Ratings based on bottom hole of Beam Clamp.
CSA File No. LR-52208

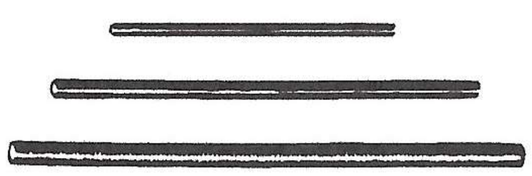

R-Series Continuous Thread Rod – Galvanized

Cat. No.	Rod Size	Ultimate‡ Load in Lbs.	Root Area Thread	Data for Pressure Piping: Nominal Pipe Size	Data for Pressure Piping: Max. Safe Load at 450°	Std. Ctn.
R628-6 ft.	¼-20	900	.027			300
R638-6 ft.	⅜-16	1900	.068	¾" to 2"	610	150
R648-6 ft.	½-13	3500	.126	2½" to 3½"	1130	60
R1028-10 ft.	¼-20	900	.027			500
R1038-10 ft.	⅜-16	1900	.068	¾" to 2"	610	250
R1048-10 ft.	½-13	3500	.126	2½" to 3½"	1130	100

‡Load Ratings based on safely factor of three.

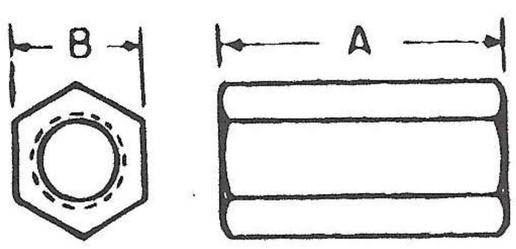

H-195 Steel Rod Coupling

Cat. No.	Rod Size	Dimensions in Inches A	Dimensions in Inches B	Std. Ctn.
H-195-1/4	¼	¾	⅜	1000
H-195-3/8	⅜	1	½	500
H-195-1/2	½	1	⅝	500
H-195-5/8	⅝	1½	¾	50

Thomas&Betts

© 2002 Thomas & Betts Corporation. Specifications are subject to change without notice. **www.tnb.com**

Type C

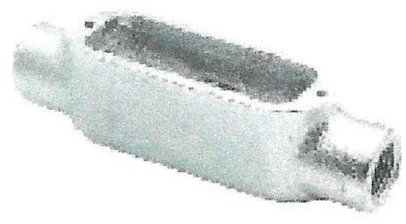

SOLAR

Threaded bodies for rigid conduit or IMC allow access for inspection, pulling and maintenance. NPT Threads. Type CG comes with neoprene gasket, and is NEMA TYPE 2,3,3R & 4.

c UL us File No. E11077

CSA File No. 702847 (C-41CG thru C-46CG)

Aluminum with Cover and Gasket

Catalog Number	Trade Size	Unit Qty.	Std. Pkg.
C-41CG	1/2"	10	60
C-42CG	3/4"	10	60
C-43CG	1"	5	30
C-44CG	1 1/4"	2	10
C-45CG	1 1/2"	2	10
C-46CG	2"	1	6
C-47CG	2 1/2"	---	1
C-48CG	3"	---	1
C-49CG	3 1/2"	---	1
C-50CG	4"	---	1

Aluminum

Catalog Number	Trade Size	Unit Qty.	Std. Pkg.
C-41	1/2"	10	60
C-42	3/4"	10	60
C-43	1"	5	30
C-44	1 1/4"	2	10
C-45	1 1/2"	2	10
C-46	2"	1	6
C-47	2 1/2"	---	1
C-48	3"	---	1
C-49	3 1/2"	---	1
C-50	4"	---	1

Malleable Iron

Catalog Number	Trade Size	Unit Qty.	Std. Pkg.
C-61	1/2"	5	50
C-62	3/4"	5	50
C-63	1"	2	20
C-64	1 1/4"	2	10
C-65	1 1/2"	2	10
C-66	2"	1	6
C-67	2 1/2"	---	1
C-68	3"	---	1
C-69	3 1/2"	---	1
C-70	4"	---	1

Combination Type C

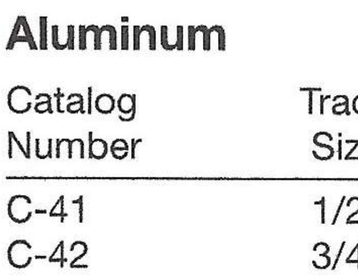

Units are threaded for use with rigid or IMC as well as set screws for use with EMT. Preassembled with cover and neoprene gasket. NPT Threads. NEMA TYPE 2,3,3R & 4.

UL File No. E11077

UL Listed Raintight when used with rigid conduit.

Aluminum with Cover and Gasket

Catalog Number	Trade Size	Unit Qty.	Std. Pkg.
C-41CGC	1/2"	10	60
C-42CGC	3/4"	10	60
C-43CGC	1"	5	30
C-44CGC	1 1/4"	2	10
C-45CGC	1 1/2"	2	10
C-46CGC	2"	1	6

Type LB

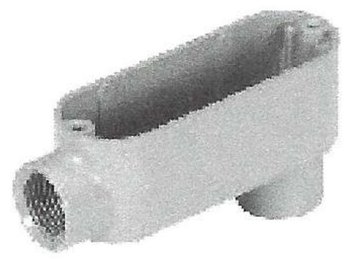

Threaded bodies for rigid conduit or IMC allow access for inspection, pulling and maintenance. NPT Threads. Type CG comes with neoprene gasket, and is NEMA TYPE 2,3,3R & 4.

c UL us File No. E11077

CSA File No. 702847 (LB-41CG thru LB-50CG)

Aluminum with Cover and Gasket

Catalog Number	Trade Size	Unit Qty.	Std. Pkg.
LB-41CG	1/2"	10	60
LB-42CG	3/4"	10	60
LB-43CG	1"	5	30
LB-44CG	1 1/4"	2	10
LB-45CG	1 1/2"	2	10
LB-46CG	2"	1	6
LB-47CG	2 1/2"	---	1
LB-48CG	3"	---	1
LB-49CG	3 1/2"	---	1
LB-50CG	4"	---	1

Aluminum

Catalog Number	Trade Size	Unit Qty.	Std. Pkg.
LB-41	1/2"	10	60
LB-42	3/4"	10	60
LB-43	1"	5	30
LB-44	1 1/4"	2	10
LB-45	1 1/2"	2	10
LB-46	2"	1	6
LB-47	2 1/2"	---	1
LB-48	3"	---	1
LB-49	3 1/2"	---	1
LB-50	4"	---	1

Malleable Iron

Catalog Number	Trade Size	Unit Qty.	Std. Pkg.
LB-61	1/2"	5	50
LB-62	3/4"	5	50
LB-63	1"	2	20
LB-64	1 1/4"	2	10
LB-65	1 1/2"	2	10
LB-66	2"	1	6
LB-67	2 1/2"	---	1
LB-68	3"	---	1
LB-69	3 1/2"	---	1
LB-70	4"	---	1

Malleable Iron with Cover and Gasket

Catalog Number	Trade Size	Unit Qty.	Std. Pkg.
LB-61CG	1/2"	5	50
LB-62CG	3/4"	5	50
LB-63CG	1"	2	20
LB-64CG	1 1/4"	2	10
LB-65CG	1 1/2"	2	10
LB-66CG	2"	1	6
LB-67CG	2 1/2"	---	1
LB-68CG	3"	---	1
LB-69CG	3 1/2"	---	1
LB-70CG	4"	---	1

Combination Type LB

Units are threaded for use with rigid or IMC as well as set screws for use with EMT. Preassembled with cover and neoprene gasket. NPT Threads. NEMA TYPE 2,3,3R & 4.

UL File No. E11077

UL Listed Raintight when used with rigid conduit.

Aluminum with Cover and Gasket

Catalog Number	Trade Size	Unit Qty.	Std. Pkg.
LB-41CGC	1/2"	10	60
LB-42CGC	3/4"	10	60
LB-43CGC	1"	5	30
LB-44CGC	1 1/4"	2	10
LB-45CGC	1 1/2"	2	10
LB-46CGC	2"	1	6

Type LL

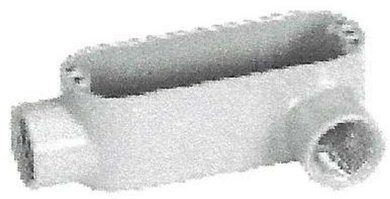

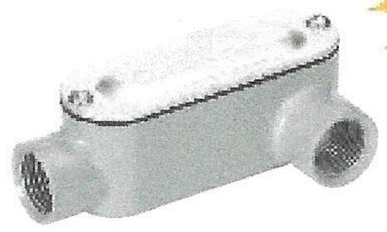

Threaded bodies for rigid conduit or IMC allow access for inspection, pulling and maintenance. NPT Threads. Type CG comes with neoprene gasket, and is NEMA TYPE 2,3,3R & 4.

c UL us File No. E11077

CSA File No. 702847 (LL-41CG thru LL-50CG)

Aluminum

Catalog Number	Trade Size	Unit Qty.	Std. Pkg.
LL-41	1/2"	10	60
LL-42	3/4"	10	60
LL-43	1"	5	30
LL-44	1 1/4"	2	10
LL-45	1 1/2"	2	10
LL-46	2"	1	6
LL-47	2 1/2"	---	1
LL-48	3"	---	1
LL-49	3 1/2"	---	1
LL-50	4"	---	1

Aluminum with Cover and Gasket

Catalog Number	Trade Size	Unit Qty.	Std. Pkg.
LL-41CG	1/2"	10	60
LL-42CG	3/4"	10	60
LL-43CG	1"	5	30
LL-44CG	1 1/4"	2	10
LL-45CG	1 1/2"	2	10
LL-46CG	2"	1	6
LL-47CG	2 1/2"	---	1
LL-48CG	3"	---	1
LL-49CG	3 1/2"	---	1
LL-50CG	4"	---	1

Malleable Iron

Catalog Number	Trade Size	Unit Qty.	Std. Pkg.
LL-61	1/2"	5	50
LL-62	3/4"	5	50
LL-63	1"	2	20
LL-64	1 1/4"	2	10
LL-65	1 1/2"	2	10
LL-66	2"	1	6
LL-67	2 1/2"	---	1
LL-68	3"	---	1
LL-69	3 1/2"	---	1
LL-70	4"	---	1

Combination Type LL

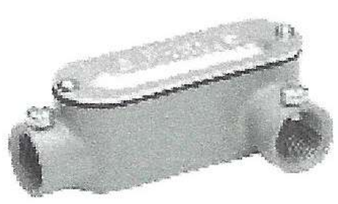

Units are threaded for use with rigid or IMC as well as set screws for use with EMT. Preassembled with cover and neoprene gasket. NPT Threads. NEMA TYPE 2,3,3R & 4.

UL File No. E11077

UL Listed Raintight when used with rigid conduit.

Aluminum with Cover and Gasket

Catalog Number	Trade Size	Unit Qty.	Std. Pkg.
LL-41CGC	1/2"	10	60
LL-42CGC	3/4"	10	60
LL-43CGC	1"	5	30
LL-44CGC	1 1/4"	2	10
LL-45CGC	1 1/2"	2	10
LL-46CGC	2"	1	6

Combination Type LL/LR

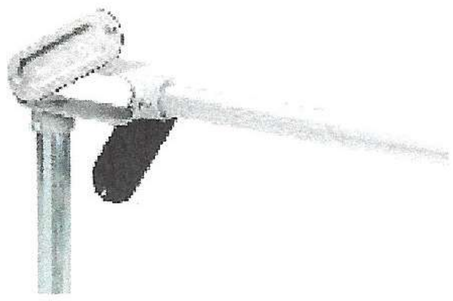

Combination type LL/LR style. Units are threaded for use with rigid or IMC as well as set screws for use with EMT. Preassembled with cover and neoprene gasket. NPT Threads. NEMA TYPE 2,3,3R & 4.

c UL us File No. E11077

Aluminum with Cover and Gasket

Catalog Number	Trade Size	Unit Qty.	Std. Pkg.
LLR-41	1/2"	10	60
LLR-42	3/4"	10	60
LLR-43	1"	5	30
LLR-44	1 1/4"	2	10
LLR-45	1 1/2"	2	10
LLR-46	2"	---	5

Combination Type LR

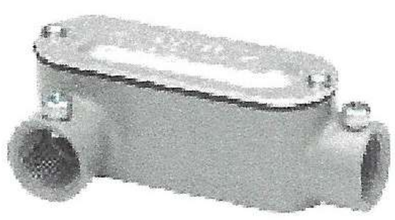

Units have a threaded interior for use with rigid or IMC as well as set screws for use with EMT. Preassembled with cover and neoprene gasket. NPT Threads. NEMA TYPE 2,3,3R & 4.

UL File No. E11077

UL Listed Raintight when used with rigid conduit.

Aluminum with Cover and Gasket

Catalog Number	Trade Size	Unit Qty.	Std. Pkg.
LR-41CGC	1/2"	10	60
LR-42CGC	3/4"	10	60
LR-43CGC	1"	5	30
LR-44CGC	1 1/4"	2	10
LR-45CGC	1 1/2"	2	10
LR-46CGC	2"	1	6

Type LR

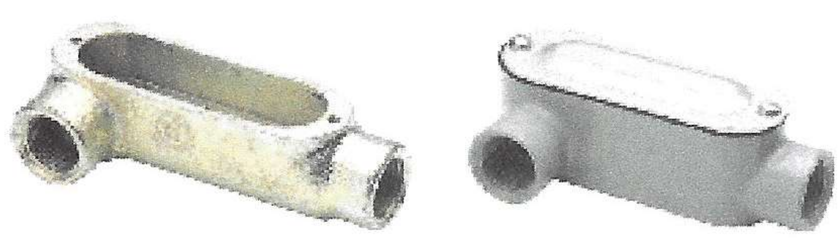

Threaded bodies for rigid conduit or IMC allow access for inspection, pulling and maintenance. NPT Threads. Type CG comes with neoprene gasket, and is NEMA TYPE 2,3,3R & 4.

c UL us File No. E11077

SA File No. 702847 (LR-41CG thru LR-50CG)

Aluminum with Cover and Gasket

Catalog Number	Trade Size	Unit Qty.	Std. Pkg.
LR-41CG	1/2"	10	60
LR-42CG	3/4"	10	60
LR-43CG	1"	5	30
LR-44CG	1 1/4"	2	10
LR-45CG	1 1/2"	2	10
LR-46CG	2"	1	6
LR-47CG	2 1/2"	---	1
LR-48CG	3"	---	1
LR-49CG	3 1/2"	---	1
LR-50CG	4"	---	1

Aluminum

Catalog Number	Trade Size	Unit Qty.	Std. Pkg.
LR-41	1/2"	10	60
LR-42	3/4"	10	60
LR-43	1"	5	30
LR-44	1 1/4"	2	10
LR-45	1 1/2"	2	10
LR-46	2"	1	6
LR-47	2 1/2"	---	1
LR-48	3"	---	1
LR-49	3 1/2"	---	1
LR-50	4"	---	1

Malleable Iron

Catalog Number	Trade Size	Unit Qty.	Std. Pkg.
LR-61	1/2"	5	50
LR-62	3/4"	5	50
LR-63	1"	2	20
LR-64	1 1/4"	2	10
LR-65	1 1/2"	2	10
LR-66	2"	1	6
LR-67	2 1/2"	---	1
LR-68	3"	---	1
LR-69	3 1/2"	---	1
LR-70	4"	---	1

Type T

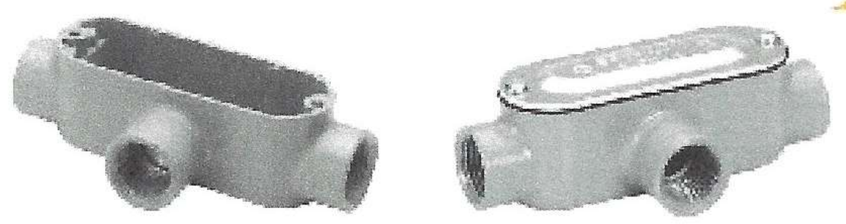

Threaded bodies for rigid conduit or IMC allow access for inspection, pulling and maintenance. NPT Threads. Type CG comes with neoprene gasket, and is NEMA TYPE 2,3,3R & 4.

UL File No. E11077

CSA File No. 702847 (T-41CG thru T-50CG)

Aluminum

Catalog Number	Trade Size	Unit Qty.	Std. Pkg.
T-41	1/2"	10	60
T-42	3/4"	10	60
T-43	1"	5	30
T-44	1 1/4"	2	10
T-45	1 1/2"	2	10
T-46	2"	1	6
T-47	2 1/2"	---	1
T-48	3"	---	1
T-49	3 1/2"	---	1
T-50	4"	---	1

Aluminum with Cover and Gasket

Catalog Number	Trade Size	Unit Qty.	Std. Pkg.
T-41CG	1/2"	10	60
T-42CG	3/4"	10	60
T-43CG	1"	5	30
T-44CG	1 1/4"	2	10
T-45CG	1 1/2"	2	10
T-46CG	2"	1	6
T-47CG	2 1/2"	---	1
T-48CG	3"	---	1
T-49CG	3 1/2"	---	1
T-50CG	4"	---	1

Malleable Iron

Catalog Number	Trade Size	Unit Qty.	Std. Pkg.
T-61	1/2"	5	50
T-62	3/4"	5	50
T-63	1"	2	20
T-64	1 1/4"	2	10
T-65	1 1/2"	2	10
T-66	2"	1	6
T-67	2 1/2"	----	1
T-68	3"	----	1
T-69	3 1/2"	----	1
T-70	4"	----	1

Combination Type T

Units have a threaded interior for use with rigid or IMC as well as set screws for use with EMT. Preassembled with cover and neoprene gasket. NPT Threads. NEMA TYPE 2,3,3R & 4.

cULus File No. E11077

UL Listed Raintight when used with rigid conduit.

Aluminum with Cover and Gasket

Catalog Number	Trade Size	Unit Qty.	Std. Pkg.
T-41CGC	1/2"	10	60
T-42CGC	3/4"	10	60
T-43CGC	1"	5	30
T-44CGC	1 1/4"	2	10
T-45CGC	1 1/2"	2	10
T-46CGC	2"	1	6

Service Entrance LB

Allows access to the interior of a conduit system for inspection, pulling and maintenance. Mounts flush against structure. Raintight. NPT Threads. Neoprene gasket. NEMA TYPE 2,3,3R & 4.

UL File No. E11077

Aluminum

Catalog Number	Trade Size	Unit Qty.	Std. Pkg.
1025	1/2"	5	50
1026	3/4"	5	50
1027	1"	---	20
1028	1 1/4"	---	10
1029	1 1/2"	---	5
1030	2"	---	4
1028-XL	1 1/4"	---	10
1030-XL	2"	---	6

Mogul Conduit Bodies

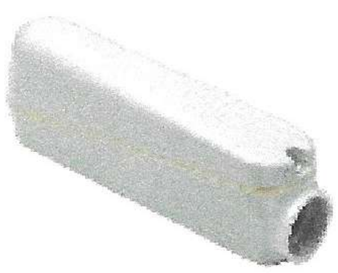

MLB-44 thru MLB-46

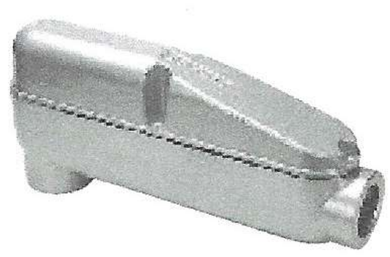

MLB-47 thru MLB-50

Allows larger access to the inside of a raceway for wire pulling. Split diagonal cover and body ensures ease in wire bending. Meets NEC 6X Rule. Raintight. NPT Threads. MLB-44 through MLB-46 has a cellulose gasket. MLB-47 through MLB-50 has a neoprene gasket. NEMA TYPE 2,3,3R & 4.

UL File No. E11077

cULus File No. E11077 (MLB-47 thru MLB-50)

Aluminum

Catalog Number	Trade Size	Unit Qty.	Std. Pkg.
MLB-44	1 1/4"	---	5
MLB-45	1 1/2"	---	2
MLB-46	2"	---	2
MLB-47	2 1/2"	---	1
MLB-48	3"	---	1
MLB-49	3 1/2"	---	1
MLB-50	4"	---	1

Dim A	Dim B	Dim C
3 1/2"	3"	9 1/2"
5 1/8"	4"	14 1/2"
5 1/8"	4"	14 1/2"
10 1/2"	8 11/16"	22 3/4"
10 1/2"	8 11/16"	22 3/4"
12"	10"	29 1/8"

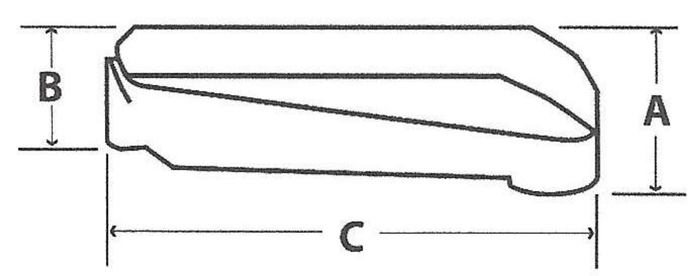

Conduit Body Covers

Steel and Aluminum Covers

Application:
- Used with conduit bodies to cover opening.

Features:
- Assembled with captive zinc plated steel screws.

Standard Materials:
Steel

Standard Finish:
Zinc plated

UL Listed:
E198259

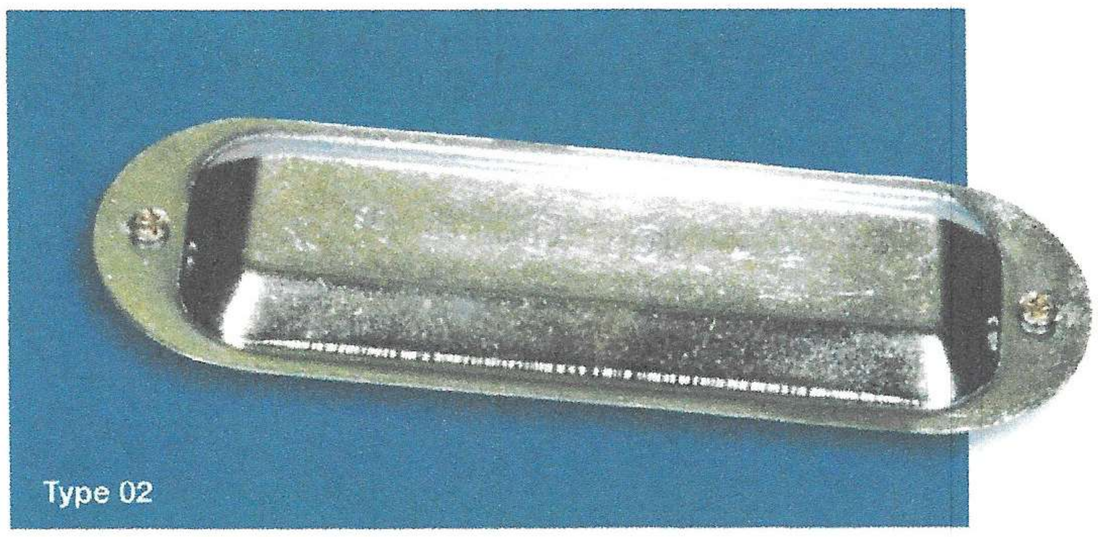
Type 02

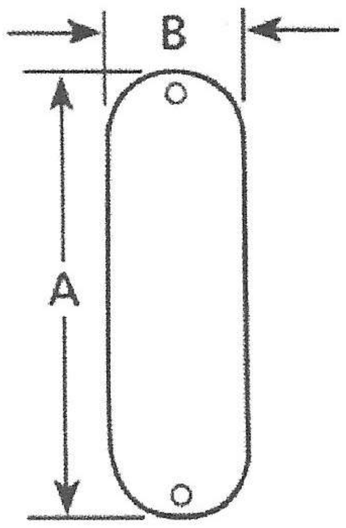

CATALOG NUMBER	TRADE SIZE	DIM A	DIM B	UNIT PACK	STANDARD PACK	WEIGHT (LBS.) PER 100 PCS.	NAED MFG #78-5994 UPC/DCI #
Steel Covers							
01	1/2"	3.875	1.310	25	250	9	49017
02	3/4"	4.625	1.520	25	250	13	49027
03	1"	5.315	1.710	20	200	19	49037
04	1-1/4" - 1-1/2"	7.240	2.510	25	100	31	49047
05	2"	9.484	3.110	-	50	50	49057
06	2-1/2" - 3"	14.937	5.500	-	10	94	49067
07	3-1/2" - 4"	15.000	6.000	-	10	138	49077

Application:
- Used with conduit bodies to cover opening.

Features:
- Assembled with captive zinc plated steel screws.
- Stamped from high-strength aluminum, corrosion and weather resistant copper-free aluminum alloy.

Standard Materials:
Stamped Aluminum

UL Listed:
E198259

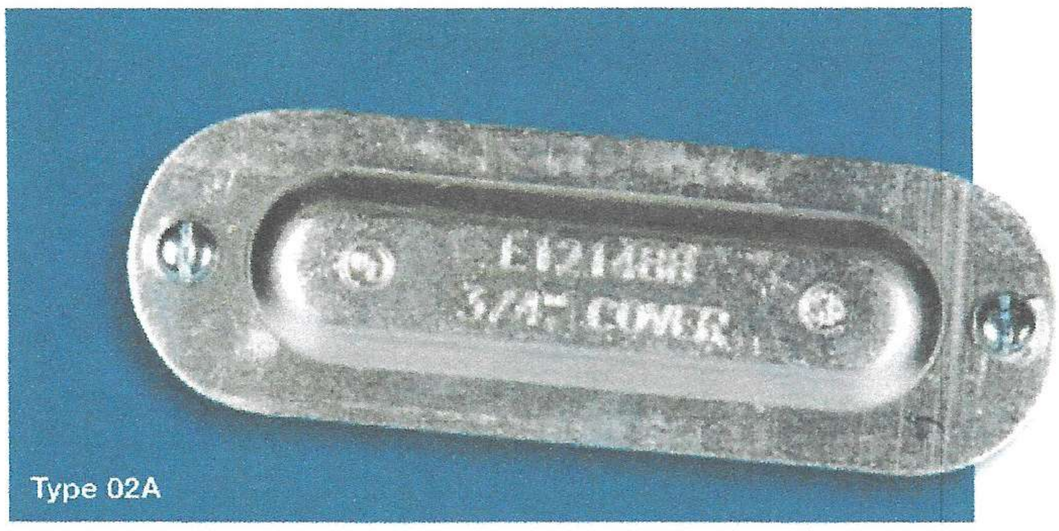
Type 02A

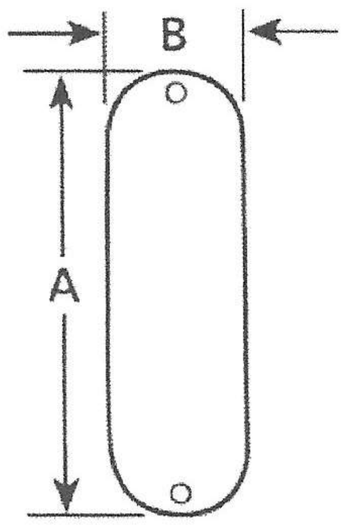

CATALOG NUMBER	TRADE SIZE	DIM A	DIM B	UNIT PACK	STANDARD PACK	WEIGHT (LBS.) PER 100 PCS.	NAED MFG #78-5994 UPC/DCI #
Aluminum Covers							
01A	1/2"	3.90	1.37	25	250	6	49105
02A	3/4"	4.70	1.60	25	250	10	49205
03A	1"	5.40	1.78	20	200	14	49305
04A	1-1/4" - 1-1/2"	7.25	2.52	25	100	18	49405
05A	2"	9.50	3.11	-	50	20	49505
06A	2-1/2" - 3"	12.13	4.45	-	10	33	49605
07A	3-1/2" - 4"	14.94	5.50	-	10	62	49705

Conduit Body Covers

Neoprene Gaskets

Application:
- Gasket used with conduit bodies for a raintight seal.

Standard Materials:
Neoprene Rubber

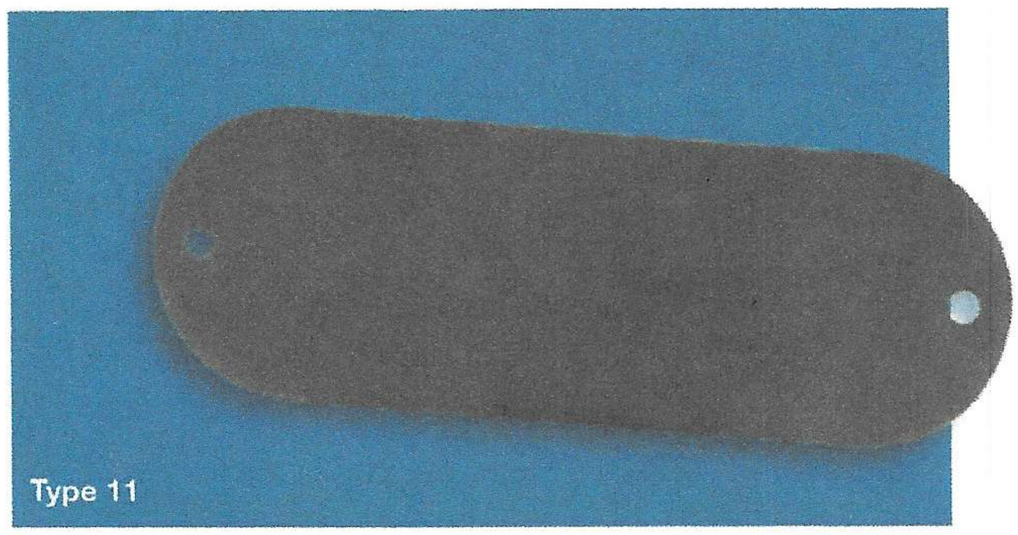
Type 11

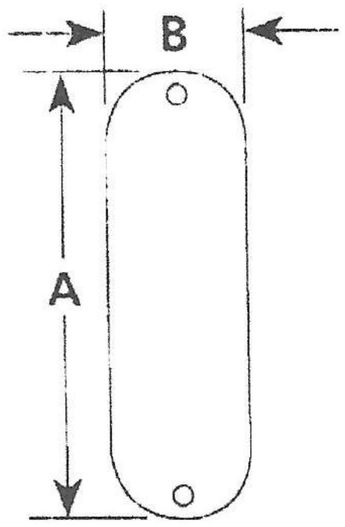

CATALOG NUMBER	TRADE SIZE	DIM A	DIM B	UNIT PACK	STANDARD PACK	WEIGHT (LBS.) PER 100 PCS.	NAED MFG #78-5994 UPC/DCI #
Neoprene Gaskets							
10	1/2"	3.90	1.37	200	2000	3	49910
11	3/4"	4.60	1.56	100	1000	3	49911
12	1"	5.34	1.73	100	1000	3	49912
13	1-1/4" - 1-1/2"	7.25	2.51	50	500	6	49913
14	2"	9.50	3.05	25	100	11	49914
15	2-1/2" - 3"	12.13	4.39	-	10	13	49915
16	3-1/2" - 4"	14.88	5.43	-	10	28	49916

SteelElectric
(718) 259-6100 • Fax: (718) 331-1874 • 1-800-626-1223
www.sepco-usa.com

Application Guide

	Conduit Type	Page	Flexibility*	Metal Used**	Plastic*** Used	High Mech. Strenght	Listed for Direct Burial	Halogen Free	Low Fire Hazard	Accepts Std. Liquidtight Fittings	Self Extinguish	EMI/RFI Shielding	Approval
	TYPE-LT	G5	B	S	P					pp. B82-B100			JIC
	TYPE-LOR	G6	B	S	P					pp. B82-B100			JIC
	TYPE-EF	G6	B	S	P					pp. B82-B100			JIC
	TYPE-LA	G7	C	S	P	X	X			pp. B82-B100	X		UL CSA
	TYPE-CBLA	G8	C	S	P	X	X			pp. B82-B100	X		UL CSA
	TYPE-CSA	G9	C	S	P	X				pp. B82-B100	X		CSA
	TYPE-ATLA	G10	C	S	P	X	X			pp. B82-B100	X		UL CSA
	TYPE-AT	G11	B	S	P					pp. B82-B100			
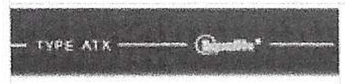	TYPE-ATX	G11	B	S	T			X		p. B85			
	TYPE-ALT	G20	C	A	P					pp. B82-B100			
	TYPE-CEA	G13	C	S	U			X	X	pp. B82-B100	X		
	TYPE-ACEA	G18	C	A	U			X	X	pp. B82-B100	X		
	TYPE-ZHLA	G12	C	S	U	X	X	X	X	pp. B82-B100	X		UL CSA
	TYPE-LAS	G21	C	S	P	X	X			pp. B82-B100	X	X	UL
	TYPE-EMS	G22	C	B	P					pp. B82-B100	X	X	

* A=Continuous flexing
B=Small bend radius
C=Flexible
D=Pliable (static)

** S=Steel
*** P=PVC
A=Aluminum
U=Pu
B=Bronze
T=TPR
N=Nylon

Steel Core

Type LT

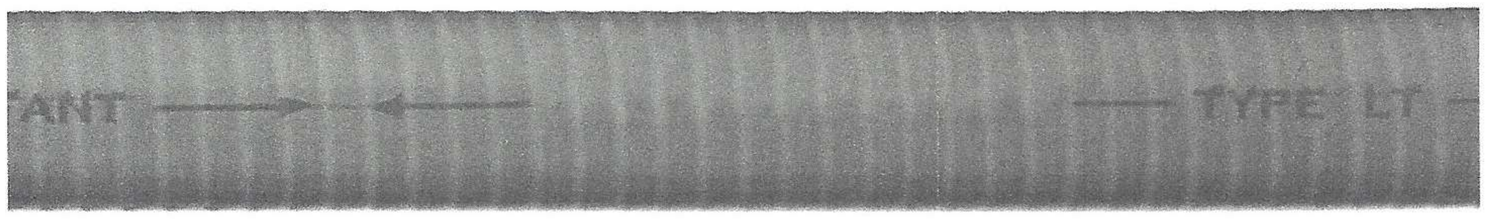

JIC

Trade Size (in.)	Cat. No.	Carton Content* (m)	Cat. No.	Reel Content* (m)	Cat. No.	Reel Content* (m)	Inside Bend Radius in.	Inside Bend Radius (mm)	Weight kg/30m
1/4	LT025-75	75	-	-	-	-	1.0	(25.4)	8
5/16	LT032-75	75	-	-	-	-	1.0	(25.4)	8
3/8	LT038-30	30	LT038-150	150	LT038-300	300	1.5	(38.1)	9
1/2	LT050-30	30	LT050-150	150	LT050-300	300	2.0	(50.8)	11
3/4	LT075-30	30	LT075-150	150	LT075-300	300	2.5	(63.5)	15
1	LT100-30	30	LT100-120	120	-		3.0	(76.2)	24
1-1/4	LT125-15	15	LT125-75	75	-	-	3.5	(88.9)	31
1-1/2	LT150-15	15	LT150-45	45	-	-	4.5	(114.3)	40
2	LT200-15	15	LT200-30	30	-		5.5	(139.7)	53
5	LT500-8	8	-	-	-	-	17.5	(444.5)	212
6	LT600-8	8	-	-	-	-	22.5	(571.5)	259

See Chart on p. G28 for dimensions and tolerances
* See p. G27 for label and packaging detail

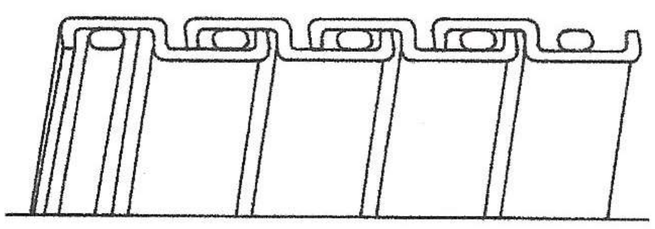

Squarelock with Filler
5/16 in. - 2 in.

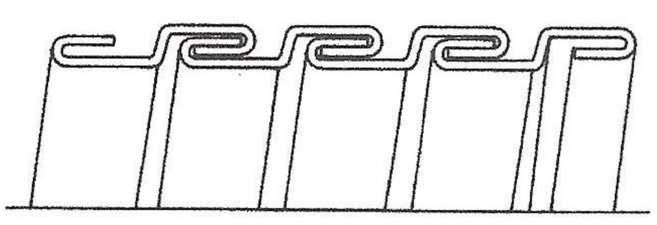

Interlock
2-1/2 in. - 6 in.

Type LT

A general purpose, flexible liquidtight steel conduit designed for a variety of installations requiring motion, vibration and bending. It offers good mechanical and moisture protection to enclosed conductors.

Construction

The flexible inner core is made from a spiral wound strip of corrosion resistant plating steel. The 1/4 through 2 inch trade sizes are squarelock formed and, with the exception of the 1/4 inch size, contain a nylon cord packing within the convolutions.

The larger sizes are constructed with a fully interlocked strip to add strength and to prevent unraveling.

A flexible yet durable PVC jacket is extruded over this core creating a liquidtight conduit resistant to most oils, acids and vapors present in industrial environments.

Refer to the Conduit — Chemical Resistance Chart beginning on p. G30.

Applications

This conduit is used extensively in the machine tool and other industrial environments where flexibility is necessary for installation and maintenance or where vibration and movement must be absorbed. The inherent sunlight resistance of PVC enables this product to be used in outdoor applications. Compatible with standard liquidtight fittings. The construction of this conduit conforms to, and is suitable for use with Sections 16 & 17.7 of the Electrical Standard for Industrial Machinery (ANSI/NFPA-79).

Working Temperatures

-20°C to 80°C

Listing / Certification

JIC — manufactured in accordance with the dimensions and specifications as outlined by the Joint Industrial Council Standard for Mass Production Equipment and Machine Tools.

Standard Colours

Machine tool grey and black. Other colours available upon request. Part numbers listed designate grey jacket.

Electrical Metallic Tubing (EMT) and True Color™ EMT

allied TUBE & CONDUIT®
A PART OF atkore INTERNATIONAL

FEATURES & SPECIFICATIONS

Manufactured for Long Life

Allied Tube & Conduit® EMT is precision manufactured from high grade mild strip steel for exceptional durability and long-lasting life. Allied EMT is hot galvanized using a patented inline Flo-Coat® process. This process combines zinc, a conversion coating, and a clear organic polymer topcoat to form a triple layer of protection against corrosion and abrasion.

E-Z Pull® EMT combines strength with ductility, providing easy bending, cutting and joining while resisting flattening, kinking and splitting. Available in sizes 1/2 (16) - 4 (103).

Coatings

Allied's EMT (Electrical Metallic Tubing) has a special low friction ID coating called E-Z Pull that greatly improves the slip properties between conduit and wire. With E-Z Pull EMT, wire pulls through the EMT smoothly and easily, making installation easier and faster.

EMI Shielding

Allied EMT is very effective in reducing electromagnetic field levels for encased power distribution circuits, shielding computers and other sensitive electronic equipment from the effects of electromagnetic interference.
For more information on EMT shielding, visit www.alliedeg.com to obtain the **GEMI** (**G**rounding and **E**lectro-**M**agnetic **I**nterference) software analysis program.

Codes & Standards Compliance

Allied EMT is listed to Underwriters Laboratories Safety Standard UL 797 and meets ANSI C80.3. These standards have been adopted as federal specifications in lieu of WWC 563. EMT is recognized as an equipment grounding conductor by NEC Section 250-118. Documentation for compliance with NEC Article 250 is also available in the **GEMI** (**G**rounding and **E**lectro-**M**agnetic **I**nterference) analysis software and related research studies found at the www.alliedeg.com website.

Installation of EMT shall be in accordance with the National Electrical Code and the UL listing information. Allied EMT is listed in category FJMX. Master bundles conform to NEMA Standard RN2.

Specification Data

To specify Allied EMT, include the following: Electrical Metallic Tubing shall be equal to that manufactured by Allied Tube & Conduit Corporation. EMT shall be hot galvanized steel O.D. with an organic corrosion resistant I.D. coating, and shall be listed to UL Safety Standard 797 and manufactured in accordance with ANSI C80.3.

Electrical Metallic Tubing (EMT) and True Color™ EMT

Listed to Underwriters Laboratories Safety Standard UL 797
Manufactured in accordance with ANSI C80.3

Trade Size	Metric Designator	Outside Diameter[1]		Nominal Wall Thickness[2]		Approximate Weight Per 100 Ft. (30.5M)		Red and Galvanized Master Bundle Quantity		True Color** Bundle Qty.	
		in	mm	in	mm	lb	kg	ft	m	ft	m
1/2	16	0.706	17.93	0.042	1.07	30	13.6	7000	2135	3500	1066.8
3/4	21	0.922	23.42	0.049	1.24	46	20.9	5000	1525	2500	762.0
1	27	1.163	29.54	0.057	1.45	67	30.4	3000	915	1500*	457.2
1-1/4	35	1.510	38.35	0.065	1.65	101	45.8	2000	610	2000	609.6
1-1/2	41	1.740	44.20	0.065	1.65	116	52.6	1500	457.5	1500	457.2
2	53	2.197	55.80	0.065	1.65	148	67.1	1200	366.0	1200	365.7
2-1/2	63	2.875	73.03	0.072	1.83	216	98.0	610	186.1	610	185.9
3	78	3.500	88.90	0.072	1.83	263	119.3	510	155.6	510	155.4
3-1/2	91	4.000	101.60	0.083	2.11	349	158.3	370	112.9	370	112.7
4	103	4.500	114.30	0.083	2.11	393	178.3	300	91.5	300	91.5

[1]Outside diameter tolerances: +/- .005 in. (.13mm) for trade sizes 1/2 (16mm) through 2 (53mm);
+/- .010 in. (.25mm) for trade sizes 2-1/2 (63mm);
+/- .015 in. (.38mm) for trade size 3 (78mm);
+/- .020 in. (.51mm) for trade sizes 3-1/2 (91mm) and 4 (103mm).

*Blue trade size 1 master bundle size: 3000 ft / 915 m
** Other Color Trade Sizes 2 - 4 are available thru special order
NOTE: Length = 10 ft. (3.05m) with a tolerance of +/- .25 in. (6.35 mm)

NOTE: Special orders are non-cancelable, non-returnable and non-refundable

16100 S. Lathrop Ave., Harvey, IL 60426
Phone / 708.339.1610 • Toll-Free / 800.882.5543

Combination Couplings

For Rigid Conduit, IMC and E.M.T.

Application:
To join E.M.T. to Rigid or IMC

Features:
- Threaded rigid and IMC to compression E.M.T.
- Concrete tight
- NPT female hub

Standard Materials:
Steel

Standard Finish:
Zinc Plated

c UL us **UL Listed:** E198258

For EMT Steel Compression to Threaded Rigid Couplings

Type ERC-23

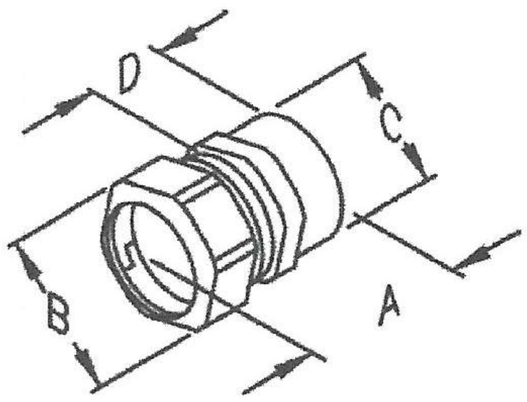

CATALOG NUMBER	TRADE SIZE	DIM A	DIM B	DIM C	DIM D	UNIT PACK	STANDARD PACK	WEIGHT (LBS.) PER 100 PCS.	NAED MFG #78-5994 UPC/DCI #
ERC-22	1/2"	1.313	1.125	0.875	0.688	25	250	14	47322
ERC-23	3/4"	1.438	1.375	1.125	0.750	25	250	25	47323
ERC-24	1"	1.500	1.688	1.375	0.813	25	250	34	47324

Application:
A combination coupling to provide a transition from EMT to unthreaded rigid conduit or IMC.

Features:
- Pre-set and staked Robertson head screws
- Concrete tight when taped

Standard Materials:
Steel

Standard Finish:
Zinc Plated

c UL us **UL Listed:** E198258

For EMT Steel Set-Screw to Rigid Set-Screw Couplings

Type S18ES

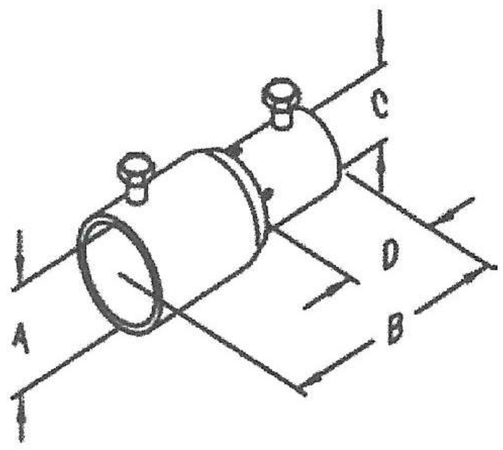

CATALOG NUMBER	TRADE SIZE	DIM A	DIM B	DIM C	DIM D	UNIT PACK	STANDARD PACK	WEIGHT (LBS.) PER 100 PCS.	NAED MFG #78-5994 UPC/DCI #
S16ES	1/2"	1.000	2.375	0.875	0.938	50	500	14	23016
S17ES	3/4"	1.250	2.813	1.125	1.125	25	250	28	23017
S18ES	1"	1.500	3.000	1.188	1.188	-	25	36	23018

RIGID AND IMC FITTINGS

MALLEABLE IRON - INSULATED BUSHINGS

Application

- For use on threaded rigid/IMC conduit to provide a smoothly rounded surface at the entrance of raceways

Product Features

- Insuliner temperature rated at 150° C
- Malleable construction insures mechanical protection for the raceway
- Zinc electro plated for corrosion protection

Compliances

- UL – Standard 514B
- CSA – C22.2 #18

Insulated Bushings
Malleable Iron

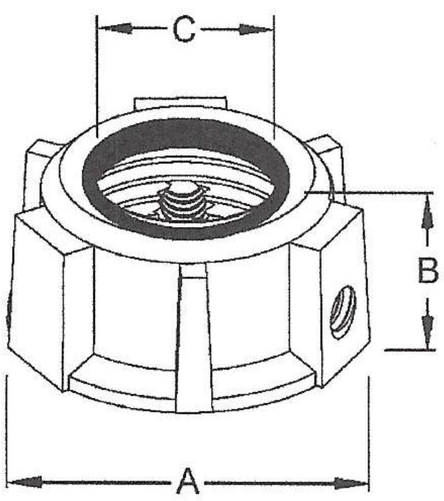

A = O.D.
B = Thickness
C = I.D.

ORDERING INFORMATION - DIMENSIONS

INSULATED BUSHINGS - MALLEABLE IRON

CATALOG NUMBER	TRADE SIZE	UNIT CTN. QTY.	SHIP CTN. QTY.	UPC BAR CODE
1132	1/2"	—	100	—
1133	3/4"	—	50	—
1134	1"	—	25	—
1135	1-1/4"	—	25	—
1136	1-1/2"	—	25	—
1138	2"	—	10	—
1126	2-1/2"	—	10	—
1127	3"	—	5	—
1128	3-1/2"	—	5	—
1129	4"	—	5	—

DIMENSIONS

CATALOG NUMBER	A	B	C THROAT DIA.
1132	1-5/32"	9/16"	37/64"
1133	1-13/32"	9/16"	49/64"
1134	1-3/4"	21/32"	31/32"
1135	2-1/8"	21/32"	1-9/32"
1136	2-11/32"	23/32"	1-1/2"
1138	2-23/32"	23/32"	1-61/64"
1126	3-9/32"	15/16"	2-19/64"
1127	3-7/8"	15/16"	2-29/32"
1128	4-13/32"	15/16"	3-3/8"
1129	4-29/32"	15/16"	3-55/64"

MALLEABLE IRON - INSULATED GROUNDING BUSHINGS

Application

- For use on threaded rigid/IMC conduit to provide a means of grounding conduit through an insulated bushing

Product Features

- Lay-in lug style provides an easy means of inserting a ground wire
- Dual rated aluminum grounding lugs may be used with copper or aluminum grounding conductors
- Insuliner temperature rated at 150° C
- Malleable construction insures mechanical protection for the raceway
- Zinc electro plated for corrosion protection

Compliances

- UL – Standard 514B
- CSA – C22.2 #18

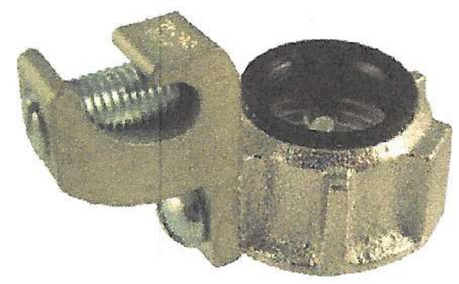

Insulated Grounding Bushings – Lay-in Lug
Malleable Iron

ORDERING INFORMATION - DIMENSIONS

INSULATED GROUNDING BUSHINGS – LAY-IN LUG – MALLEABLE IRON

CATALOG NUMBER	TRADE SIZE	UNIT CTN. QTY.	SHIP CTN. QTY.	GROUNDING WIRE CAPACITY		UPC BAR CODE
				MIN.	MAX.	
1212	1/2"	—	100	#14 Sol.	# 4 Str.	—
1213	3/4"	—	100	#14 Sol.	# 4 Str.	—
1214	1"	—	50	#14 Sol.	# 4 Str.	—
1215	1-1/4"	—	25	#14 Sol.	# 4 Str.	—
1216	1-1/2"	—	25	#14 Sol.	# 4 Str.	—
1218	2"	—	10	#14 Sol.	# 4 Str.	—
1290	2-1/2"	—	10	#14 Sol.	# 1/0 Str.	—
1292RAC	3"	—	5	#14 Sol.	# 1/0 Str.	—
1294	3-1/2"	—	5	# 6 Str.	# 250 MCM	—
1296	4"	—	5	# 6 Str.	# 250 MCM	—

DIMENSIONS

CATALOG NUMBER	A	B	C	D	E	F	G SET SCREW	H PAN HEAD SCREW	I SET SCREW
1212	1-5/32"	9/16"	1/2"-14 NPS	37/64"	1-1/16"	3/8"	10-32 x 1/4"	10-32 x 1/4"	14-28 x 5/8"
1213	1-13/32"	9/16"	3/4"-14 NPS	3/4"	1-1/16"	3/8"	10-32 x 1/4"	10-32 x 1/4"	14-28 x 5/8"
1214	1-3/4"	21/32"	1"-11-1/2 NPS	31/32"	1-1/16"	3/8"	10-32 x 1/4"	10-32 x 1/4"	14-28 x 5/8"
1215	2-1/8"	21/32"	1-1/4"-11-1/2 NPS	1-9/32"	1-1/16"	3/8"	10-32 x 1/4"	10-32 x 1/4"	14-28 x 5/8"
1216	2-11/32"	23/32"	1-1/2"-11-1/2 NPS	1-1/2"	1-1/16"	3/8"	10-32 x 1/4"	10-32 x 1/4"	14-28 x 5/8"
1218	2-23/32"	23/32"	2"-11-1/2 NPS	1-61/64"	1-1/16"	3/8"	10-32 x 1/4"	10-32 x 1/4"	14-28 x 5/8"
1290	3-9/32"	15/16"	2-1/2"-8 NPS	2-19/64"	1-1/2"	19/32"	10-32 x 5/16"	1/4-20 x 3/8"	3/8-24 x 7/8"
1292RAC	3-7/8"	15/16"	3"- 8 NPS	2-29/32"	1-1/2"	19/32"	10-32 x 5/16"	1/4-20 x 3/8"	3/8-24 x 7/8"
1294	4-13/32"	15/16"	3-1/2"- 8 NPS	3-3/8"	2-13/64"	51/64"	5/16-24 x 3/8"	5/16-24 x 17/32"	9/16-18 x 1-1/4"
1296	4-29/32"	15/16"	4"- 8 NPS	3-55/64"	2-13/64"	51/64"	5/16-24 x 7/16"	5/16-24 x 17/32"	9/16-18 x 1-1/4"

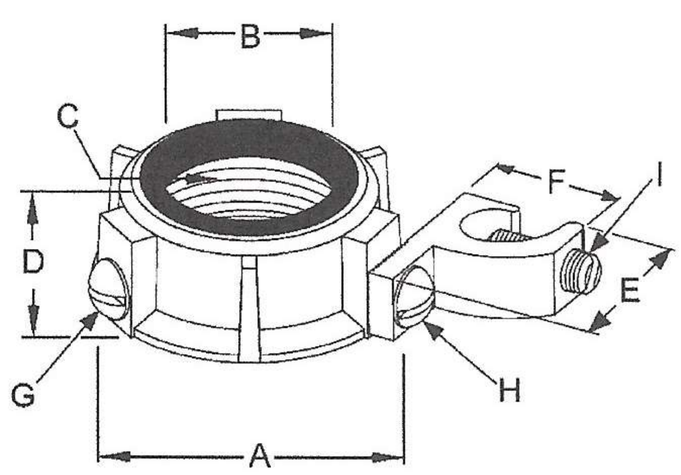

A = O.D.
B = I.D.
C = Thread size
D = Thickness
E = Height of lug
F = Width of lug
G = Screw spec, bonding screw
H = Screw spec, screw that holds lug to bushing
I = Screw spec, screw that holds ground wire

RIGID AND IMC FITTINGS

MALLEABLE IRON - INSULATED GROUNDING BUSHINGS

Application

- For use on threaded rigid/IMC conduit to provide a means of grounding conduit through an insulated bushing

Product Features

- Feed-thru lug style provides an easy means of inserting a ground wire
- Dual rated aluminum grounding lugs may be used with copper or aluminum grounding conductors
- Insuliner temperature rated at 150° C
- Malleable construction insures mechanical protection for the raceway
- Zinc electro plated for corrosion protection

Compliances

- UL – Standard 514B
- CSA – C22.2 #18

Insulated Grounding Bushings – Feed-Thru Lug
Malleable Iron

ORDERING INFORMATION - DIMENSIONS

INSULATED GROUNDING BUSHINGS – FEED-THRU LUG – MALLEABLE IRON

CATALOG NUMBER	TRADE SIZE	UNIT CTN. QTY.	SHIP CTN. QTY.	GROUNDING WIRE CAPACITY MIN.	GROUNDING WIRE CAPACITY MAX.	UPC BAR CODE
1222	1/2"	—	100	#14 Sol.	# 4 Str.	—
1223	3/4"	—	100	#14 Sol.	# 4 Str.	—
1224	1"	—	50	#14 Sol.	# 4 Str.	—
1225	1-1/4"	—	25	#14 Sol.	# 4 Str.	—
1226	1-1/2"	—	25	#14 Sol.	# 4 Str.	—
1228	2"	—	10	#14 Sol.	# 4 Str.	—
1230	2-1/2"	—	10	#14 Sol.	# 1/0 Str.	—
1232RAC	3"	—	5	#14 Sol.	# 1/0 Str.	—
1234	3-1/2"	—	5	#6 Str.	# 250 MCM	—
1236	4"	—	5	#6 Str.	# 250 MCM	—

DIMENSIONS

CATALOG NUMBER	A	B	C	D	E	F	G SET SCREW	H PAN HEAD SCREW	I SET SCREW
1222	1-5/32"	9/16"	1/2"-14 NPS	37/64"	1-1/16"	1/2"	10-32 x 1/4"	10-32 x 7/32"	14-28 x 3/8"
1223	1-13/32"	9/16"	3/4"-14 NPS	49/64"	1-1/16"	1/2"	10-32 x 1/4"	10-32 x 7/32"	14-28 x 3/8"
1224	1-3/4"	21/32"	1"-11-1/2 NPS	31/32"	1-1/16"	1/2"	10-32 x 1/4"	10-32 x 1/4"	14-28 x 3/8"
1225	2-1/8"	21/32"	1-1/4"-11-1/2 NPS	1-9/32"	1-1/16"	1/2"	10-32 x 1/4"	10-32 x 1/4"	14-28 x 3/8"
1226	2-11/32"	23/32"	1-1/2"-11-1/2 NPS	1-1/2"	1-1/16"	1/2"	10-32 x 1/4"	10-32 x 1/4"	14-28 x 3/8"
1228	2-23/32"	23/32"	2"-11-1/2 NPS	1-61/64"	1-1/16"	1/2"	10-32 x 1/4"	10-32 x 1/4"	14-28 x 3/8"
1230	3-9/32"	15/16"	2-1/2"-8 NPS	2-19/64"	1-15/32"	5/8"	5/16-24 x 3/8"	5/16-24 x 3/8"	7/16-20 x 3/8"
1232RAC	3-7/8"	15/16"	3"- 8 NPS	2-29/32"	1-15/32"	5/8"	5/16-24 x 3/8"	5/16-24 x 3/8"	7/16-20 x 3/8"
1234	4-13/32"	15/16"	3-1/2"- 8 NPS	3-3/8"	1-3/4"	27/32"	5/16-24 x 3/8"	5/16-24 x 27/64"	5/8-18 x 11/16"
1236	4-29/32"	15/16"	4"- 8 NPS	3-55/64"	1-3/4"	27/32"	5/16-24 x 7/16"	5/16-24 x 27/64"	5/8-18 x 11/16"

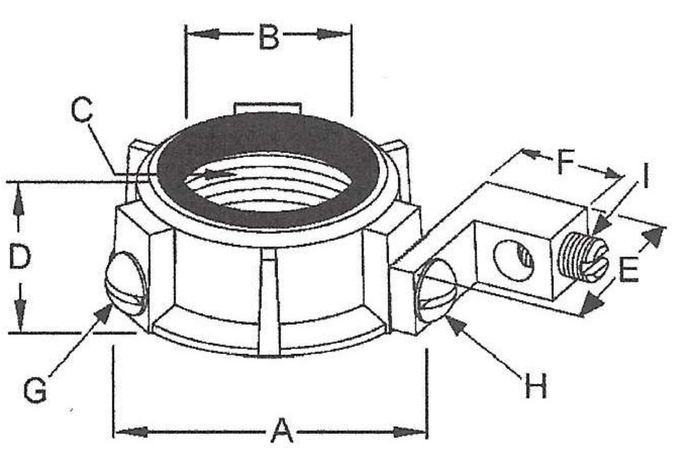

A = O.D.
B = I.D.
C = Thread size
D = Thickness
E = Height of lug
F = Width of lug
G = Screw spec, bonding screw
H = Screw spec, screw that holds lug to bushing
I = Screw spec, screw that holds ground wire

FLEXIBLE METAL CONDUIT FITTINGS

MALLEABLE IRON – 90 DEGREE SQUEEZE CONNECTORS

Application

- For use in dry locations to bond flexible metal conduit to a box or enclosure

Product Features

- Malleable construction insures mechanical protection for the raceway
- Electro zinc plated for added corrosion protection
- UPC bar coded fittings are individually polybagged with a preprinted UPC-A bar code and packaged in pre-scored tear top cartons for an attractive presentation

Insulated and Uninsulated Compliances

- c UL us

Squeeze
90 Degree - Insulated
Malleable Iron

Squeeze
90 Degree - Uninsulated
Malleable Iron

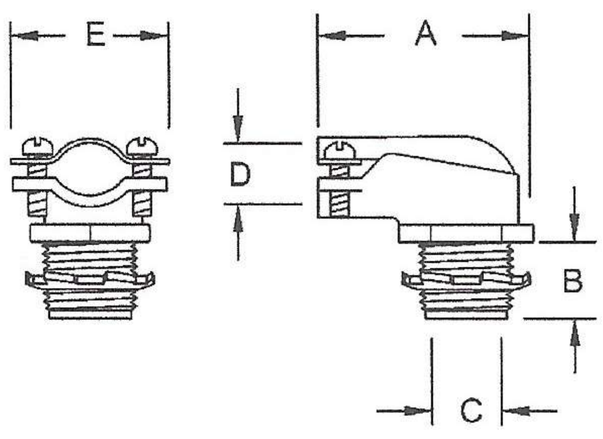

A = Overall length
B = Thread length and thread spec
C = Throat I.D.
D = Clamping range
E = Maximum width body

ORDERING INFORMATION - DIMENSIONS

SQUEEZE 90 DEGREE – INSULATED AND UNINSULATED – MALLEABLE IRON

INSULATED IRON CATALOG NUMBER	UNINSULATED IRON CATALOG NUMBER	TRADE SIZE	UNIT CTN. QTY.	SHIP CTN. QTY.	UPC BAR CODE
3201	2201	3/8" *	—	50	—
3202	—	1/2"	—	25	—
—	2202	1/2"	25	100	—
3202-8	2202-8	1/2"	1	25	|||||||
3203	2203	3/4"	—	25	—
3203-8	2203-8	3/4"	1	20	|||||||
3204	2204	1"	—	25	—
3204-8	2204-8	1"	1	5	|||||||
3205	2205	1-1/4"	—	10	—
3206	2206	1-1/2"	—	5	—
3208	2208	2"	—	5	—
3210	2210	2-1/2"	—	1	—
3212	2212	3"	—	1	—
3214	2214	3-1/2"	—	1	—
3216	2216	4"	—	1	—

* For 1/2" knockout

DIMENSIONS

CAT. NO. INSULATED	CAT. NO. UNINSLTD.	A	B	THD. SPEC.	C	D	E
3201	2201	2-1/64"	23/64"	1/2"-14 NPS	.570	.390-.630	1-3/8"
3202 3202-8	2202 2202-8	2-15/64"	27/64"	1/2"-14 NPS	.570	.817-.950	1-51/64"
3203 3203-8	2203 2203-8	2-1/2"	1/2"	3/4"-14 NPS	.822	.830-1.110	1-31/32"
3204 3204-8	2204 2204-8	2-27/32"	33/64"	1"-11-1/2 NPS	.950	1.295 MAX	2-11/32"
3205	2205	4-13/64"	43/64"	1-1/4"-11-1/2 NPS	1.210	1.535 MAX	2-55/64"
3206	2206	4-57/64"	19/32"	1-1/2"-11-1/2 NPS	1.450	1.890 MAX	3-3/32"
3208	2208	6-35/64"	51/64"	2"-11-1/2 NPS	1.883	2.415 MAX	3-51/64"
3210	2210	7-9/16"	1-7/64"	2-1/2"- 8 NPS	2.300	2.515 MAX	4-21/64"
3212	2212	8-31/32"	1-3/64"	3"- 8 NPS	2.940	3.025 MAX	5-1/16"
3214	2214	11-15/64"	1-17/64"	3-1/2"- 8 NPS	3.440	3.700 MAX	6-51/64"
3216	2216	12-11/32"	1-9/16"	4"- 8 NPS	3.935	4.050 MAX	7-17/64"

STEEL COMBINATION COUPLINGS

Application

- Use RACO® Cat. Nos. 1432-1434 when coupling unthreaded rigid/ IMC to EMT

Product Features

- Rugged metallic construction insures mechanical protection
- All steel components are zinc electro plated for corrosion protection
- UPC bar coded fittings are individually polybagged with a preprinted UPC-A bar code and packaged in pre-scored tear top cartons for an attractive presentation

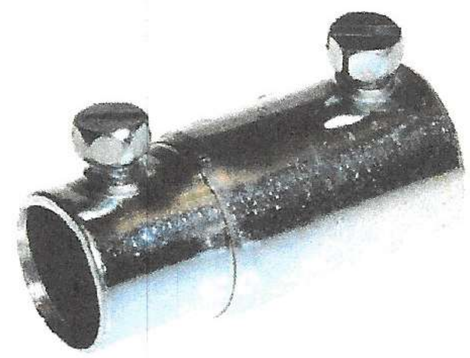

EMT – Rigid Couplings Set Screw Steel

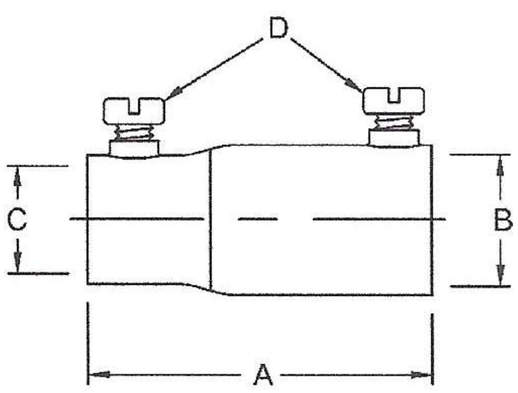

A = Overall length
B = I.D. rigid side
C = I.D. EMT side
D = Screw spec

ORDERING INFORMATION - DIMENSIONS

EMT – RIGID COUPLINGS SET SCREW - STEEL

CATALOG NUMBER	TRADE SIZE	UNIT CTN. QTY.	SHIP CTN. QTY.	UPC BAR CODE
1432	1/2"	—	25	—
1432-8	1/2"	1	25	|||||||
1433	3/4"	—	25	—
1433-8	3/4"	1	15	|||||||
1434	1"	—	25	—
1434-8	1"	1	15	|||||||

DIMENSIONS

CATALOG NUMBER	A	B	C	D
1432	2-13/64"	55/64"	23/32"	1/4-28 x 3/8" Pan Head
1432-8	2-13/64"	55/64"	23/32"	1/4-28 x 3/8" Pan Head
1433	2-21/32"	1-1/16"	59/64"	1/4-28 x 3/8" Pan Head
1433-8	2-21/32"	1-1/16"	59/64"	1/4-28 x 3/8" Pan Head
1434	3-5/64"	1-21/64"	1-11/64"	1/4-28 x 3/8" Pan Head
1434-8	3-5/64"	1-21/64"	1-11/64"	1/4-28 x 3/8" Pan Head

EMT FITTINGS

STEEL - SET SCREW CONNECTORS

Applications

- For use in dry locations to bond EMT conduit to a box or enclosure
- RACO® steel set screw connectors provide concrete-tight connections when taped
- RACO® set screw connectors are suitable for applications above 600V

Product Features

- All steel construction insures mechanical protection for the raceway
- Tri-head screws (1/2" to 2" trade sizes) may be installed using a slotted, Phillips, or Robertson head screwdriver
- 2-1/2" to 4" trade sizes are also UL listed for use on Rigid/IMC conduit, allowing for design and installation flexibility
- All components are zinc electroplated for corrosion protection
- UPC bar coded fittings are individually polybagged with a preprinted UPC-A bar code and packaged in pre-scored tear top cartons for an attractive presentation

Compliances

1/2"- 2"

- c(UL)us - Standard 514B
  - C22.2 # 18

2-1/2"- 4"

- (UL) - Standard 514B

2-1/2"- 4"

- (SP) - C22.2 # 18

UnInsulated Throat Connectors Steel

Insulated Connectors Steel

ORDERING INFORMATION

SET SCREW CONNECTORS – STEEL

INSULATED CATALOG NUMBER	UNINSULATED CATALOG NUMBER	TRADE SIZE	UNIT CTN. QTY.	SHIP CTN. QTY.	UPC BAR CODE
2122	2002	1/2"	50	500	—
2122-8	2002-8	1/2"	1	25	|||||||
2123	2003	3/4"	25	250	—
2123-8	2003-8	3/4"	1	20	|||||||
—	2004	1"	25	100	—
2124	—	1"	—	25	—
2124-8	2004-8	1"	1	10	|||||||
2125	2005	1-1/4"	—	20	—
2126	2006	1-1/2"	—	20	—
2128	2008	2"	—	20	—
2160	2140	2-1/2"	—	5	—
2162RAC	2142	3"	—	1	—
2164	2144	3-1/2"	—	1	—
2166	2146	4"	—	1	—

Steel EMT Set-Screw Couplings

For EMT Conduit

Application:
To ground and secure E.M.T. raceway sections together.

Features:
- Heavy steel walls
- Concrete tight
- Pre-set/Pre-staked set screws
- Three-way combination screws

Standard Materials:
Steel

Standard Finish:
Zinc Plated

UL Listed:
E308075

Type S1113

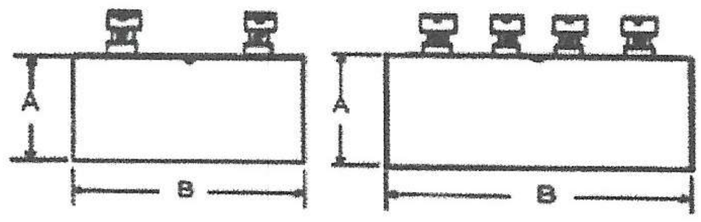

CATALOG NUMBER	TRADE SIZE	DIM A	DIM B	UNIT PACK	STANDARD PACK	WEIGHT (LBS.) PER 100 PCS.	NAED MFG #78-5994 UPC/DCI #
S1113	1/2"	0.87	1.63	50	500	8	62107
S1114	3/4"	1.10	1.86	25	250	13	62117
S1115	1"	1.36	2.31	50	200	20	62127
*S1115A	1-1/4"	1.73	2.76	25	100	40	62137
*S1115B	1-1/2"	1.97	3.00	10	40	58	62147
*S1115C	2"	2.45	3.27	5	20	65	62157
*S1115D	2-1/2"	3.10	4.00	-	12	130	62167
*S1115E	3"	3.72	4.25	-	12	140	62177
*S1115E1	3-1/2"	4.24	4.50	-	6	217	62187
*S1115F	4"	4.74	4.75	-	6	250	62197

* Furnished with four set-screws

SteelElectric
(718) 259-6100 • Fax: (718) 331-1874 • 1-800-626-1223
www.sepco-usa.com

Steel EMT Set-Screw Connectors

For EMT Conduit

Application:
To ground and secure E.M.T. raceways to boxes and enclosures.

Features:
- Heavy steel walls
- Concrete tight
- Pre-set/Pre-staked set screws
- Male hub threads NPS
- Three-way combination screws

Standard Materials:
Steel

Standard Finish:
Zinc Plated

UL Listed:
E308075

Type S1111

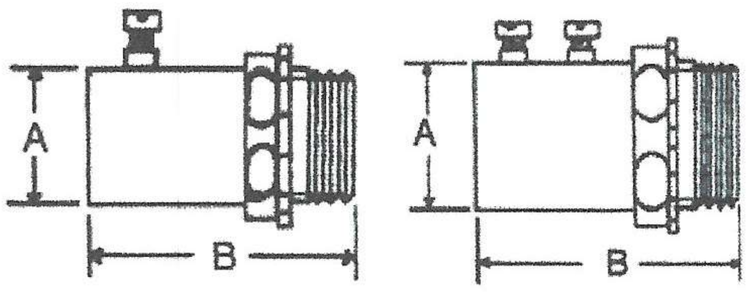

CATALOG NUMBER	TRADE SIZE	KO SIZE	DIM A	DIM B	UNIT PACK	STANDARD PACK	WEIGHT (LBS.) PER 100	NAED MFG #78-5994 UPC/DCI #
S1110	1/2"	1/2"	0.87	1.53	50	500	9	62007
S1111	3/4"	3/4"	1.10	1.58	25	250	13	62017
S1112	1"	1"	1.36	1.83	50	200	20	62027
*S1112A	1-1/4"	1-1/4"	1.73	2.34	25	100	36	62037
*S1112B	1-1/2"	1-1/2"	1.97	2.27	10	40	45	62047
*S1112C	2"	2"	2.45	2.40	5	20	64	62057
*S1112D	2-1/2"	2-1/2"	3.10	3.18	-	12	130	62067
*S1112E	3"	3"	3.72	3.81	-	12	140	62077
*S1112E1	3-1/2"	3-1/2"	4.24	4.31	-	6	180	62087
*S1112F	4"	4"	4.74	4.87	-	6	225	62097

* Furnished with two set-screws

Insulated Throat

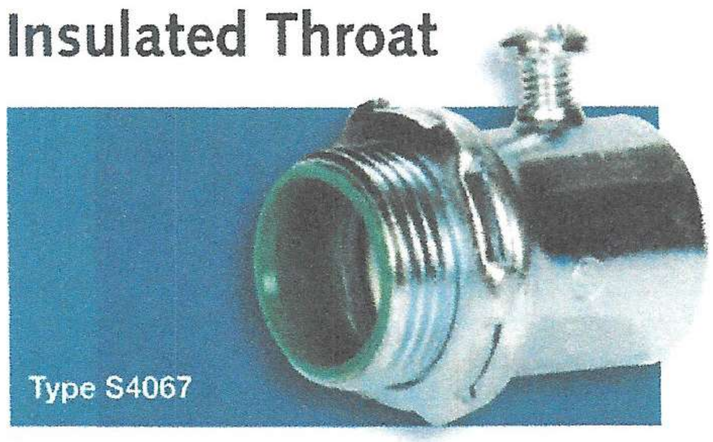
Type S4067

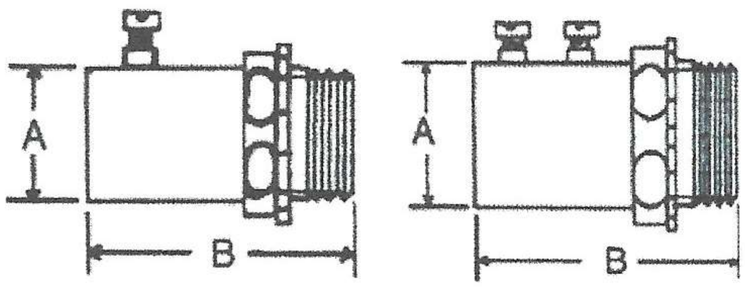

CATALOG NUMBER	TRADE SIZE	KO SIZE	DIM A	DIM B	UNIT PACK	STANDARD PACK	WEIGHT (LBS.) PER 100	NAED MFG #78-5994 UPC/DCI #
S4066	1/2"	1/2"	0.87	1.53	50	500	9	62003
S4067	3/4"	3/4"	1.10	1.58	25	250	13	62013
S4068	1"	1"	1.36	1.83	50	200	20	62023
*S4069	1-1/4"	1-1/4"	1.73	2.34	25	100	36	62033
*S4070	1-1/2"	1-1/2"	1.97	2.27	10	40	45	62043
*S4071	2"	2"	2.45	2.40	5	20	64	62053
*S4072	2-1/2"	2-1/2"	3.10	3.18	-	12	130	62063
*S4073	3"	3"	3.72	3.81	-	12	140	62073
*S4074	3-1/2"	3-1/2"	4.24	4.31	-	6	180	62083
*S4075	4"	4"	4.74	4.87	-	6	225	62093

* Furnished with two set-screws

EMT FITTINGS

STEEL - SET SCREW COUPLINGS

Applications

- For use in dry locations to couple two ends of EMT conduit
- RACO® steel set screw couplings provide concrete-tight connections when taped
- RACO® set screw couplings are suitable for applications above 600V

Product Features

- All steel construction insures mechanical protection for the raceway
- Tri-head screws (1/2" to 2" trade sizes) may be installed using a slotted, Phillips, or Robertson head screwdriver
- 2-1/2" to 4" trade sizes are also UL listed for use on Rigid/IMC conduit, allowing for design and installation flexibility
- All components are zinc electroplated for corrosion protection
- UPC bar coded fittings are individually polybagged with a preprinted UPC-A bar code and packaged in pre-scored tear top cartons for an attractive presentation

Compliances

1/2"- 2"

- c UL us - Standard 514B
  - C22.2 # 18

2-1/2"- 4"

- UL - Standard 514B
  - CSA - C22.2 # 18

COUPLINGS
STEEL

ORDERING INFORMATION

COUPLINGS - STEEL

CATALOG NUMBER	TRADE SIZE	UNIT CTN. QTY.	SHIP CTN. QTY.	UPC BAR CODE
2022	1/2"	50	500	—
2022-8	1/2"	1	25	|||||||
2023	3/4"	25	250	—
2023-8	3/4"	1	20	|||||||
2024	1"	25	100	—
2024-8	1"	1	10	|||||||
2025	1-1/4"	5	25	—
2026	1-1/2"	—	20	—
2028	2"	—	20	—
2150	2-1/2"	—	5	—
2152	3"	—	1	—
2154	3-1/2"	—	1	—
2156	4"	—	1	—

Rigid PVC Conduit & Fittings

allied TUBE & CONDUIT®

A PART OF atkore INTERNATIONAL

- Commercial, Industrial and Utility Usage
- Corrosion Resistant
- Non-Magnetic and non-galvanic
- Self Extinguishing
- Impact Resistant

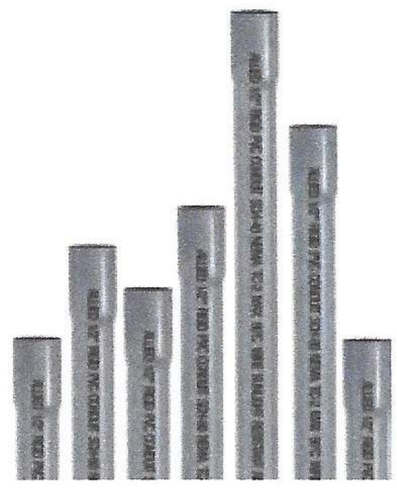

FEATURES & SPECIFICATIONS

Allied Tube & Conduit offers a complete line of rigid PVC conduit and fittings and PVC utility duct. For commercial, industrial and utility usage, Allied PVC conduit and duct is proven durable and effective for years of maintenance-free performance in underground, encased and exposed applications in accordance with the National Electrical Code.

Corrosion Proof:
Resistant to most chemicals, PVC is typically not affected by corrosive soils or salts.

Non-Magnetic and Non-Galvanic:
Properties of Allied PVC Conduit provide good insulation and no power loss or conductor heating.

Self Extinguishing:
Properties make PVC fire resistant.

Impact Resistant:
Tough, durable, with high tensile strength, yet easy to handle and install right on the jobsite.

Schedule 40 & 80 rigid PVC conduit systems are sunlight resistant and are used exposed, encased in concrete, concealed in walls and in direct burial applications including systems for:

- Utilities
- Cable, data and communication lines
- Institutional, commercial, industrial buildings
- Residential applications, & service entrances
- Street and highway underground feeds
- Transportation systems - subways, bridges, tunnels, airports
- Water and wastewater treatment plants
- Marinas
- Mines and mills

Type DB-60 and DB-120 utility duct are designed for direct burial applications. **Type EB-20 and EB-35** are designed for burial encased in concrete.

Codes And Standards Compliance

Allied Schedule 40 and Schedule 80 rigid conduits are third-party certified to UL 651 and are allowed for use with 90° C conductors, in accordance with the National Electrical Code. They are manufactured in accordance with NEMA TC2.

Allied Type DB and EB ducts are manufactured in accordance with NEMA TC 6&8 and are allowed for use with 90° C conductors.

Allied PVC fittings are manufactured in accordance with NEMA TC3. The UL standard for PVC fittings is UL 651; for boxes UL 514C, for cover plates UL 514D and for enclosures UL 50.

See product pages for UL listing information.

Specification

All wiring shall be installed in Allied Tube & Conduit rigid PVC conduit and secured by means of proper fittings. All fittings shall be offered by Allied Tube & Conduit. All outlets, pull boxes and junction points shall be fitted with Allied outlet boxes, fittings and junction boxes.

Exposed conduit shall be securely attached and supported by means of straps. The straps shall be installed at the recommended spacing as specified in the National Electrical Code (NEC). The straps must allow for linear expansion and contraction of the conduit due to temperature change. If the variance in temperature exceeds 25°F, expansion joints shall be installed according to the manufacturer's recommendations.

If rigid PVC conduit is embedded in concrete or direct buried, support straps are not required.

Project Information

Company Name: _____
Address: _____
City: _____
State & Zip: _____
Phone: _____
Project Name: _____
City: _____
State: _____

PVC Schedule 40 - Standard Radius Elbows (Plain End)

allied TUBE & CONDUIT®
A PART OF atkore INTERNATIONAL

90° Elbows - Plain End

Trade Size	Part Number	Unit Quantity	Diameter (D) (in)	Length (L) (in)	Radius (R) (in)
1/2	59588	35	0.840	1.500	4.00
3/4	59589	50	1.050	1.500	4.50
1	59590	25	1.315	1.875	5.75
1-1/4	59591	30	1.660	2.000	7.25
1-1/2	59592	15	1.900	2.000	8.25
2	59593	20	2.375	2.000	9.50
2-1/2	59594	1	2.875	3.000	10.50
3	59595	1	3.500	3.125	13.00
3-1/2	59596	1	4.000	3.250	15.00
4	59597	1	4.500	3.375	16.00
5	59598	1	5.565	3.622	24.00
6	59599	1	6.625	3.740	30.00

Third-party certified to UL651

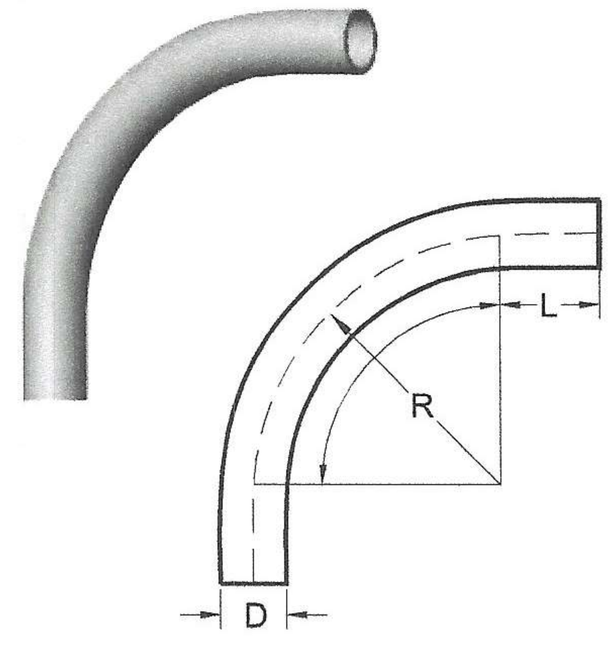

45° Elbows - Plain End

Trade Size	Part Number	Unit Quantity	Diameter (D) (in)	Length (L) (in)	Radius (R) (in)
1/2	59575	70	0.840	1.500	4.00
3/4	59576	50	1.050	1.500	4.50
1	59577	50	1.315	1.875	5.75
1-1/4	59578	30	1.660	2.000	7.25
1-1/2	59579	20	1.900	2.000	8.25
2	59580	20	2.375	2.000	9.50
2-1/2	59581	12	2.875	3.000	10.50
3	59582	10	3.500	3.125	13.00
3-1/2	59583	1	4.000	3.250	15.00
4	59584	1	4.500	3.375	16.00
5	59585	1	5.565	3.625	24.00
6	59586	1	6.625	3.750	30.00

Third-party certified to UL651

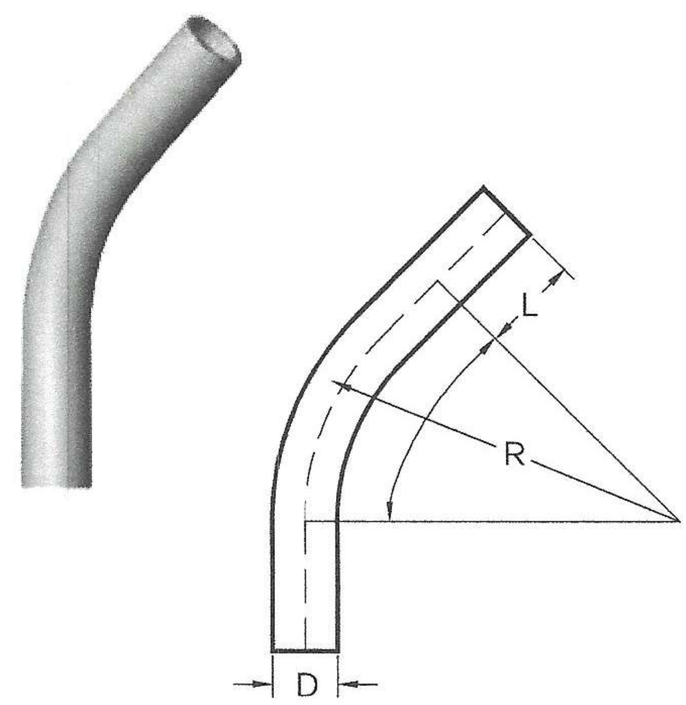

30° Elbows - Plain End

Trade Size	Part Number	Unit Quantity	Diameter (D) (in)	Length (L) (in)	Radius (R) (in)
1/2	59561	50	0.840	1.500	4.00
3/4	59562	50	1.050	1.500	4.50
1	59563	50	1.315	1.875	5.75
1-1/4	59564	30	1.660	2.000	7.25
1-1/2	59565	25	1.900	2.000	8.25
2	59566	15	2.375	2.000	9.50
2-1/2	59567	10	2.875	3.000	10.50
3	59568	10	3.500	3.125	13.00
3-1/2	59569	1	4.000	3.250	15.00
4	59570	1	4.500	3.375	16.00
5	59571	1	5.565	3.625	24.00
6	59572	1	6.625	3.750	30.00

Third-party certified to UL651

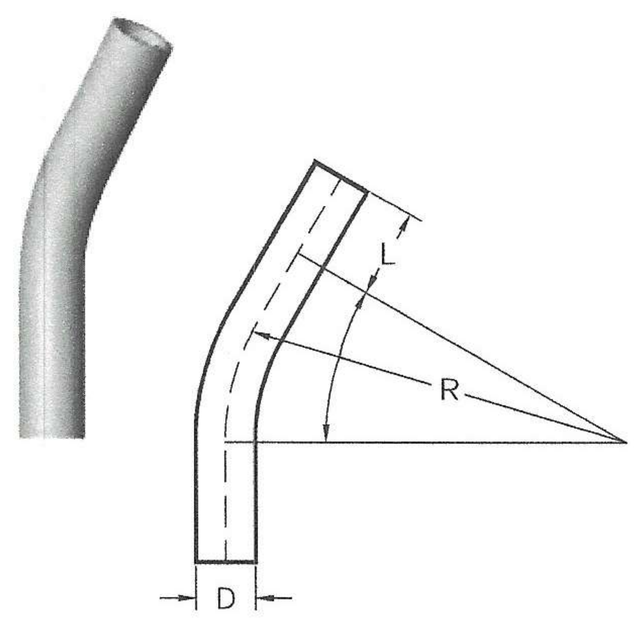

PVC Conduit & Fittings are not available in all markets.
Please contact your Allied representative or distributor for details.

NOTE: Special orders are non-cancelable, non-returnable and non-refundable

16100 S. Lathrop Ave., Harvey, IL 60426
Phone / 708.339.1610 • Toll-Free / 800.882.5543

PVC Schedule 40 - Standard Radius Elbows (Bell End)

allied TUBE & CONDUIT®
A PART OF atkore INTERNATIONAL

90° Elbows - Bell End*

Trade Size	Part Number	Unit Quantity	Diameter (D) (in)	Length (L) (in)	Radius (R) (in)
1/2	802752	35	0.840	1.500	4.00
3/4	802753	50	1.050	1.500	4.50
1	802754	25	1.315	1.875	5.75
1-1/4	802755	20	1.660	2.000	7.25
1-1/2	802756	15	1.900	2.000	8.25
2	802757	10	2.375	2.000	9.50
2-1/2	802758	1	2.875	3.000	10.50
3	802759	1	3.500	3.125	13.00
3-1/2	802761	1	4.000	3.250	15.00
4	802762	1	4.500	3.375	16.00
5	802763	1	5.565	3.622	24.00
6	802764	1	6.625	3.740	30.00

*Special radius available upon request.
Third-party certified to UL651

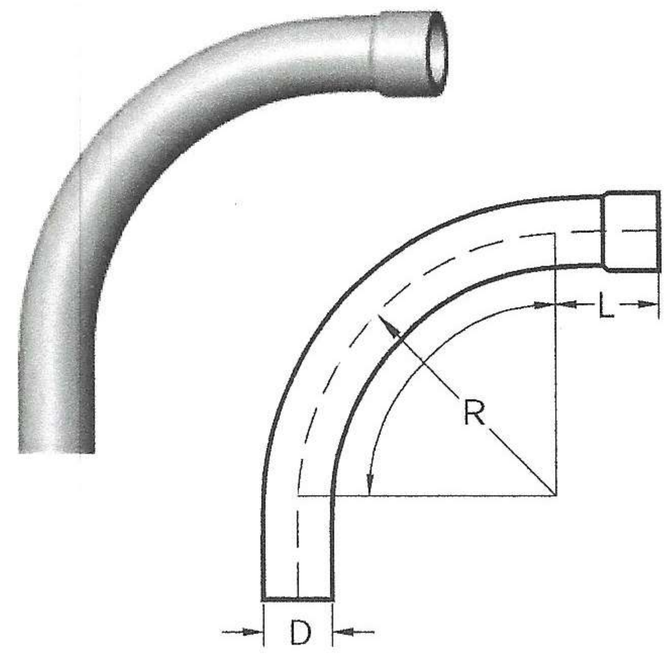

45° Elbows - Bell End*

Trade Size	Part Number	Unit Quantity	Diameter (D) (in)	Length (L) (in)	Radius (R) (in)
1/2	802765	70	0.840	1.500	4.00
3/4	802767	50	1.050	1.500	4.50
1	802768	50	1.315	1.875	5.75
1-1/4	802769	30	1.660	2.000	7.25
1-1/2	802770	15	1.900	2.000	8.25
2	802771	10	2.375	2.000	9.50
2-1/2	802772	1	2.875	3.000	10.50
3	802773	1	3.500	3.125	13.00
3-1/2	802774	1	4.000	3.250	15.00
4	802775	1	4.500	3.375	16.00
5	802776	1	5.565	3.625	24.00
6	802777	1	6.625	3.750	30.00

*Special radius available upon request.
Third-party certified to UL651

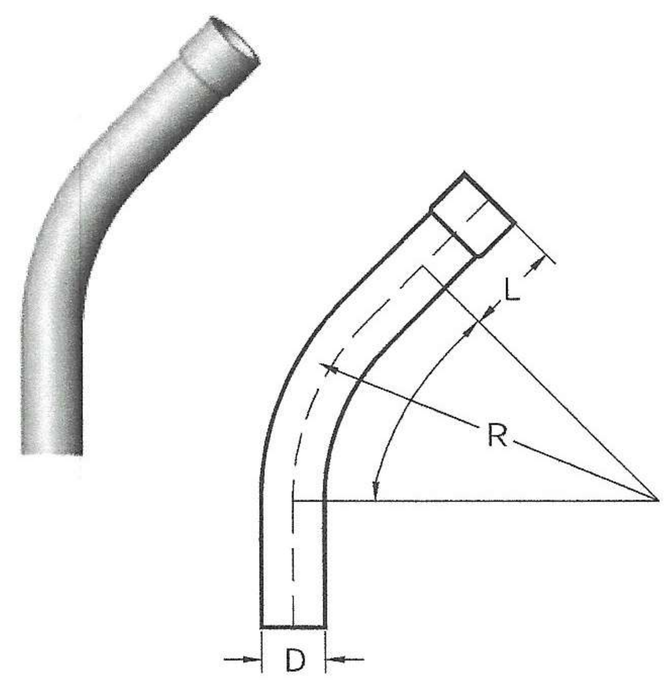

30° Elbows - Bell End*

Trade Size	Part Number	Unit Quantity	Diameter (D) (in)	Length (L) (in)	Radius (R) (in)
1/2	802778	50	0.840	1.500	4.00
3/4	802779	35	1.050	1.500	4.50
1	802780	50	1.315	1.875	5.75
1-1/4	802781	30	1.660	2.000	7.25
1-1/2	802782	50	1.900	2.000	8.25
2	802783	30	2.375	2.000	9.50
2-1/2	802784	1	2.875	3.000	10.50
3	802785	1	3.500	3.125	13.00
3-1/2	802786	1	4.000	3.250	15.00
4	802787	1	4.500	3.375	16.00
5	802788	1	5.565	3.625	24.00
6	802789	1	6.625	3.750	30.00

*Special radius available upon request.
Third-party certified to UL651

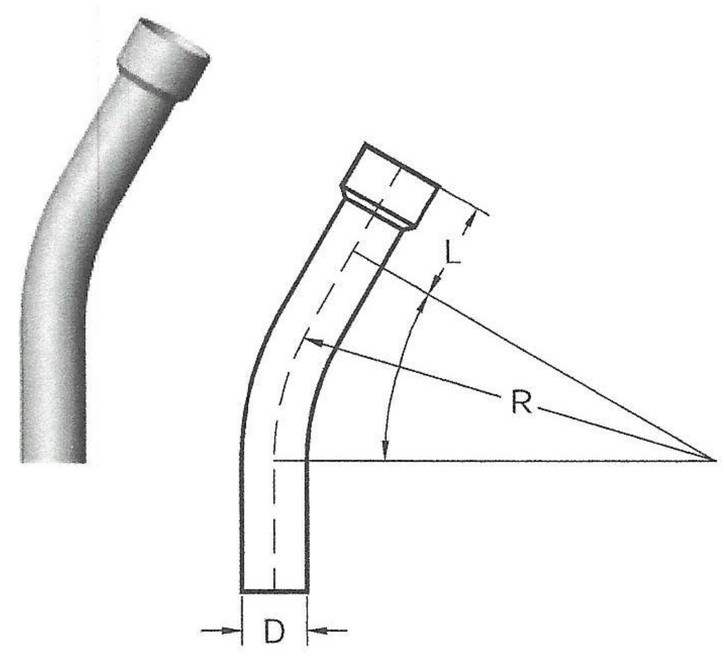

PVC Conduit & Fittings are not available in all markets.
Please contact your Allied representative or distributor for details.

NOTE: Special orders are non-cancelable, non-returnable and non-refundable

16100 S. Lathrop Ave., Harvey, IL 60426
Phone / 708.339.1610 • Toll-Free / 800.882.5543

PVC Schedule 80 - Standard Radius Elbows (Plain End)

allied TUBE & CONDUIT®
A PART OF atkore INTERNATIONAL

90° Elbows - Plain End*

Trade Size	Part Number	Unit Quantity	Diameter (D) (in)	Length (L) (in)	Radius (R) (in)
1/2	59012	50	0.840	1.500	4.00
3/4	59013	35	1.050	1.500	4.50
1	59014	20	1.315	1.875	5.75
1-1/4	59015	30	1.660	2.000	7.25
1-1/2	59016	30	1.900	2.000	8.25
2	59017	15	2.375	2.000	9.50
2-1/2	59018	8	2.875	3.000	10.50
3	59019	1	3.500	3.125	13.00
4	59021	1	4.500	3.375	16.00
5	59022	1	5.565	3.622	24.00
6	59023	1	6.625	3.740	30.00

*Belled end available upon request
Third-party certified to UL651

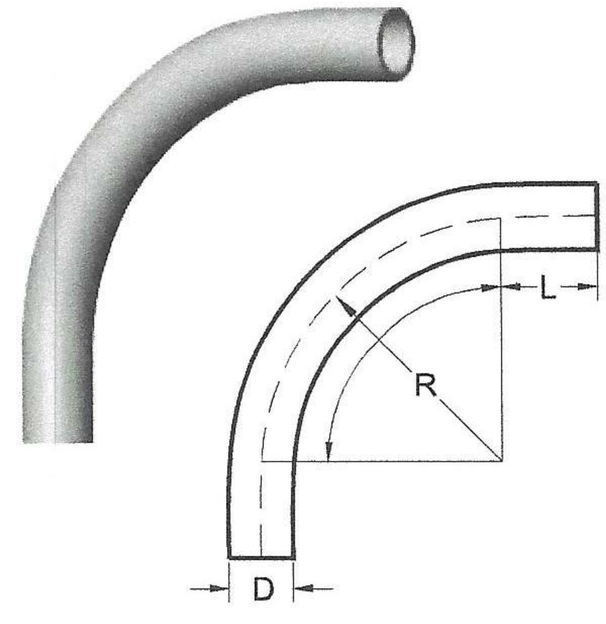

45° Elbows - Plain End*

Trade Size	Part Number	Unit Quantity	Diameter (D) (in)	Length (L) (in)	Radius (R) (in)
1/2	59000	50	0.840	1.500	4.00
3/4	59001	25	1.050	1.500	4.50
1	59002	20	1.315	1.875	5.75
1-1/4	59003	25	1.660	2.000	7.25
1-1/2	59004	20	1.900	2.000	8.25
2	59005	10	2.375	2.000	9.50
2-1/2	59006	20	2.875	3.000	10.50
3	59007	1	3.500	3.125	13.00
4	59009	1	4.500	3.375	16.00
5	59010	1	5.565	3.625	24.00
6	59011	1	6.625	3.750	30.00

*Belled end available upon request
Third-party certified to UL651

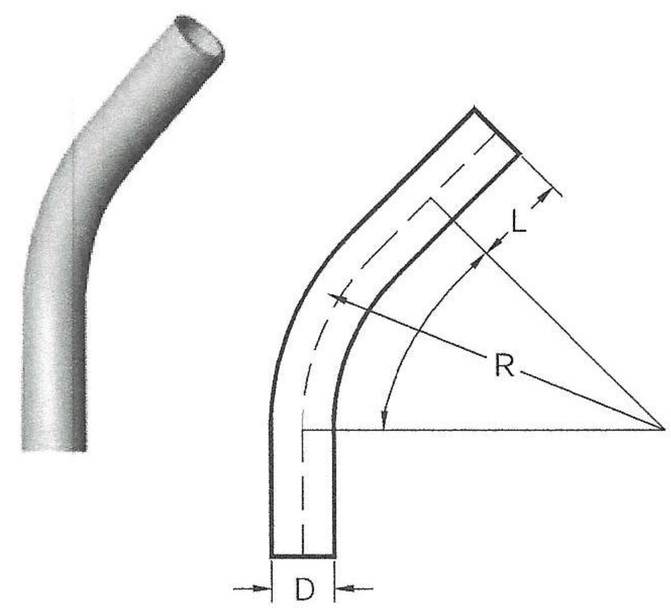

30° Elbows - Plain End*

Trade Size	Part Number	Unit Quantity	Diameter (D) (in)	Length (L) (in)	Radius (R) (in)
1/2	59064	50	0.840	1.500	4.00
3/4	59065	25	1.050	1.500	4.50
1	59066	25	1.315	1.875	5.75
1-1/4	59067	20	1.660	2.000	7.25
1-1/2	59068	25	1.900	2.000	8.25
2	59069	20	2.375	2.000	9.50
2-1/2	59070	1	2.875	3.000	10.50
3	59071	1	3.500	3.125	13.00
4	59072	1	4.500	3.375	16.00
5	59073	1	5.565	3.625	24.00
6	59074	1	6.625	3.750	30.00

*Belled end available upon request
Third-party certified to UL651

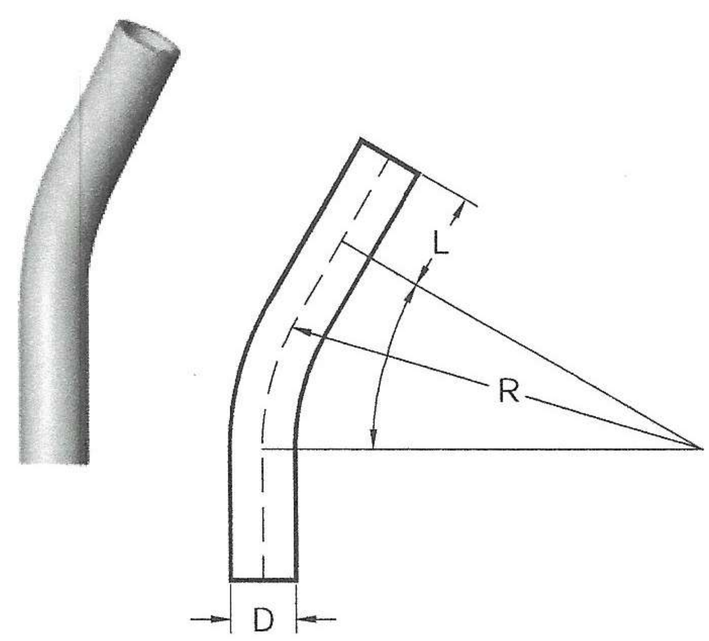

PVC Conduit & Fittings are not available in all markets.
Please contact your Allied representative or distributor for details.

NOTE: Special orders are non-cancelable, non-returnable and non-refundable

16100 S. Lathrop Ave., Harvey, IL 60426
Phone / 708.339.1610 • Toll-Free / 800.882.5543
www.alliedeg.com

PVC Schedule 40 - Special Radius Elbows (Plain End)

allied TUBE & CONDUIT®
A PART OF atkore INTERNATIONAL

Schedule 40 - Special Radius Elbows

		18" Radius		24" Radius		30" Radius		36" Radius		48" Radius	
Trade Size	Degree	Part Number	Bundle Quantity	Part Number	Bundle Quantity	Part Number	Bundle Quantity	Part Number	Bundle Quantity	Part Number	Bundle Quantity
1	90°	59701	1 pc.	59708	1 pc.	59717	1 pc.	59727	1 pc.	59738	1 pc.
	45°	59749	1 pc.	59756	1 pc.	59765	1 pc.	59775	1 pc.	59786	1 pc.
	30°	59797	1 pc.	59804	1 pc.	59813	1 pc.	59823	1 pc.	59834	1 pc.
	22-1/2°	59845	1 pc.	59854	1 pc.	59864	1 pc.	59875	1 pc.	59886	1 pc.
1-1/4	90°	59702	1 pc.	59709	1 pc.	59718	1 pc.	59728	1 pc.	59739	1 pc.
	45°	59750	1 pc.	59757	1 pc.	59766	1 pc.	59776	1 pc.	59787	1 pc.
	30°	59798	1 pc.	59805	1 pc.	59814	1 pc.	59824	1 pc.	59835	1 pc.
	22-1/2°	59846	1 pc.	59855	1 pc.	59865	1 pc.	59876	1 pc.	59887	1 pc.
1-1/2	90°	59703	1 pc.	59710	1 pc.	59719	1 pc.	59729	1 pc.	59740	1 pc.
	45°	59751	1 pc.	59758	1 pc.	59767	1 pc.	59777	1 pc.	59788	1 pc.
	30°	59799	1 pc.	59806	1 pc.	59815	1 pc.	59825	1 pc.	59836	1 pc.
	22-1/2°	59847	1 pc.	59856	1 pc.	59866	1 pc.	59877	1 pc.	59888	1 pc.
2	90°	59704	1 pc.	59711	1 pc.	59720	1 pc.	59730	1 pc.	59741	1 pc.
	45°	59752	1 pc.	59759	1 pc.	59768	1 pc.	59778	1 pc.	59789	1 pc.
	30°	59800	1 pc.	59807	1 pc.	59816	1 pc.	59826	1 pc.	59837	1 pc.
	22-1/2°	59848	1 pc.	59857	1 pc.	59867	1 pc.	59878	1 pc.	59889	1 pc.
2-1/2	90°	59705	1 pc.	59712	1 pc.	59721	1 pc.	59731	1 pc.	59742	1 pc.
	45°	59753	1 pc.	59760	1 pc.	59769	1 pc.	59779	1 pc.	59790	1 pc.
	30°	59801	1 pc.	59808	1 pc.	59817	1 pc.	59827	1 pc.	59838	1 pc.
	22-1/2°	59849	1 pc.	59898	1 pc.	59868	1 pc.	59879	1 pc.	59890	1 pc.
3	90°	59706	1 pc.	59713	1 pc.	59722	1 pc.	59732	1 pc.	59743	1 pc.
	45°	59754	1 pc.	59761	1 pc.	59770	1 pc.	59780	1 pc.	59791	1 pc.
	30°	59802	1 pc.	59809	1 pc.	59818	1 pc.	59828	1 pc.	59839	1 pc.
	22-1/2°	59850	1 pc.	59859	1 pc.	59869	1 pc.	59880	1 pc.	59891	1 pc.
3-1/2	90°	Use Standard Schedule 40 Radius (15")		59714	1 pc.	59723	1 pc.	59733	1 pc.	59744	1 pc.
	45°			59762	1 pc.	59771	1 pc.	59781	1 pc.	59792	1 pc.
	30°			59810	1 pc.	59819	1 pc.	59829	1 pc.	59840	1 pc.
	22-1/2°			59860	1 pc.	59870	1 pc.	59881	1 pc.	59892	1 pc.
4	90°	Use Standard Schedule 40 Radius (16")		59715	1 pc.	59724	1 pc.	59734	1 pc.	59745	1 pc.
	45°			59763	1 pc.	59772	1 pc.	59782	1 pc.	59793	1 pc.
	30°			59811	1 pc.	59820	1 pc.	59830	1 pc.	59841	1 pc.
	22-1/2°			59861	1 pc.	59871	1 pc.	59882	1 pc.	59893	1 pc.
5	90°	Use Standard Schedule 40 Radius (24")			***	59725	1 pc.	59735	1 pc.	59746	1 pc.
	45°				***	59773	1 pc.	59783	1 pc.	59794	1 pc.
	30°				***	59821	1 pc.	59831	1 pc.	59842	1 pc.
	22-1/2°				***	59872	1 pc.	59883	1 pc.	59894	1 pc.
6	90°	Use Standard Schedule 40 Radius (30")					****	59736	1 pc.	59747	1 pc.
	45°						****	59784	1 pc.	59795	1 pc.
	30°						****	59832	1 pc.	59843	1 pc.
	22-1/2°						****	59884	1 pc.	59895	1 pc.
8	90°	–	–	–	–	–	–	–	–	894493	1 pc.
	45°	–	–	–	–	–	–	–	–	894494	1 pc.

- 60" radius available upon request
- Special radius bell end elbows available upon request
- Contact your Allied Tube & Conduit Electrical Representative for more information

PVC Conduit & Fittings are not available in all markets.
Please contact your Allied representative or distributor for details.

NOTE: Special orders are non-cancelable, non-returnable and non-refundable

16100 S. Lathrop Ave., Harvey, IL 60426
Phone / 708.339.1610 • Toll-Free / 800.882.5543

PVC Schedule 80 - Special Radius Elbows (Plain End)

allied TUBE & CONDUIT®
A PART OF atkore INTERNATIONAL

Schedule 80 - Special Radius Elbows

		18" Radius		24" Radius		30" Radius		36" Radius	
Trade Size	Degree	Part Number	Bundle Quantity	Part Number	Bundle Quantity	Part Number	Bundle Quantity	Part Number	Bundle Quantity
1	90°	808827	1 pc.	808831	1 pc.	808835	1 pc.	808845	1 pc.
	45°	808828	1 pc.	808832	1 pc.	808842	1 pc.	808846	1 pc.
	30°	808829	1 pc.	808833	1 pc.	808843	1 pc.	808847	1 pc.
	22-1/2°	808830	1 pc.	808834	1 pc.	808844	1 pc.	808848	1 pc.
1-1/4	90°	808849	1 pc.	808854	1 pc.	808858	1 pc.	808862	1 pc.
	45°	808850	1 pc.	808855	1 pc.	808859	1 pc.	808863	1 pc.
	30°	808851	1 pc.	808856	1 pc.	808860	1 pc.	808864	1 pc.
	22-1/2°	808852	1 pc.	808857	1 pc.	808861	1 pc.	808865	1 pc.
1-1/2	90°	805133	1 pc.	808868	1 pc.	809049	1 pc.	809053	1 pc.
	45°	805131	1 pc.	808869	1 pc.	809050	1 pc.	809054	1 pc.
	30°	808866	1 pc.	808870	1 pc.	809051	1 pc.	809055	1 pc.
	22-1/2°	808867	1 pc.	808871	1 pc.	809052	1 pc.	809056	1 pc.
2	90°	809057	1 pc.	805916	1 pc.	597394	1 pc.	597493	1 pc.
	45°	809058	1 pc.	809061	1 pc.	809067	1 pc.	809070	1 pc.
	30°	809059	1 pc.	809065	1 pc.	809068	1 pc.	809071	1 pc.
	22-1/2°	809060	1 pc.	809066	1 pc.	809069	1 pc.	809072	1 pc.
2-1/2	90°	597043	1 pc.	597123	1 pc.	597391	1 pc.	809081	1 pc.
	45°	805132	1 pc.	809078	1 pc.	809075	1 pc.	809082	1 pc.
	30°	809073	1 pc.	809079	1 pc.	809076	1 pc.	809083	1 pc.
	22-1/2°	809074	1 pc.	809080	1 pc.	809077	1 pc.	809084	1 pc.
3	90°	597063	1 pc.	597152	1 pc.	597392	1 pc.	597494	1 pc.
	45°	809085	1 pc.	809088	1 pc.	809091	1 pc.	809094	1 pc.
	30°	809086	1 pc.	809089	1 pc.	809092	1 pc.	809095	1 pc.
	22-1/2°	809087	1 pc.	809090	1 pc.	809093	1 pc.	809096	1 pc.
4	90°	Use Standard Schedule 40 Radius (16")		597153	1 pc.	597393	1 pc.	597492	1 pc.
	45°			809205	1 pc.	597823	1 pc.	597944	1 pc.
	30°			809206	1 pc.	809208	1 pc.	809210	1 pc.
	22-1/2°			809207	1 pc.	809209	1 pc.	809211	1 pc.
5	90°	–	–	Use Standard Schedule 40 Radius (24")		597395	1 pc.	597495	1 pc.
	45°	–	–			597824	1 pc.	597946	1 pc.
	30°	–	–			809212	1 pc.	809214	1 pc.
	22-1/2°	–	–			809213	1 pc.	809215	1 pc.
6	90°	–	–	–	–	809249	1 pc.	597491	1 pc.
	45°	–	–	–	–	809250	1 pc.	597945	1 pc.
	30°	–	–	–	–	809251	1 pc.	809253	1 pc.
	22-1/2°	–	–	–	–	809252	1 pc.	809254	1 pc.

• 60" radius available upon request
• Contact your Allied Tube & Conduit Electrical Representative for more information

PVC Conduit & Fittings are not available in all markets.
Please contact your Allied representative or distributor for details.

NOTE: Special orders are non-cancelable, non-returnable and non-refundable

16100 S. Lathrop Ave., Harvey, IL 60426
Phone / 708.339.1610 • Toll-Free / 800.882.5543

Plastic Duct Spacers

allied TUBE & CONDUIT®

A PART OF atkore INTERNATIONAL

Plastic duct spacers for completely enclosed and locked-in duct banks.

- They snap together, vertically, slide together horizontally for fast, secure field assembly.
- Only two components, base and intermediate, are needed. Banding is not necessary.
- With the Vertical-lok spacer, ducts are accurately separated. Spacers lock firmly together, preventing separation.
- Alignment of the duct bank sections is relatively easy with this completely locked-in construction.
- To prevent the top tier from floating during encased burial, it is suggested that an intermediate spacer be used as a cap.
- Used in both EB and DB installations.
- Vertical and horizontal interlocking permits building a strong, lock-in duct bank. A wide baseplate provides solid support for heaviest loads.
- Units slide together for horizontal locking.

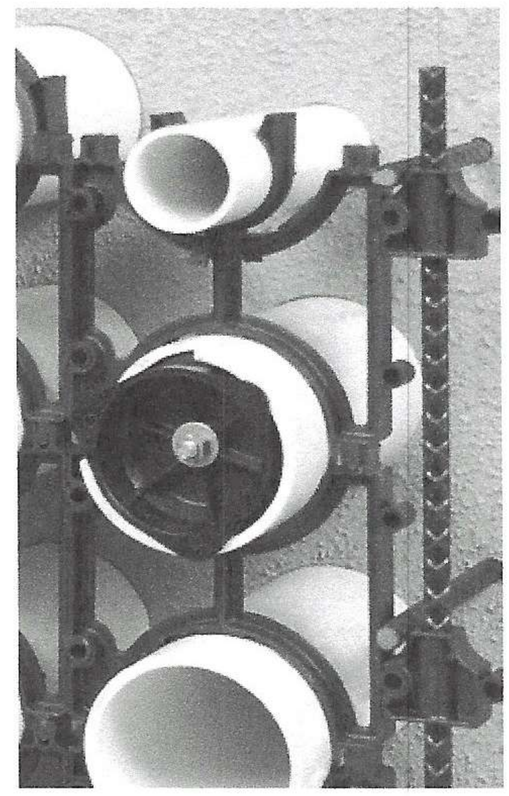

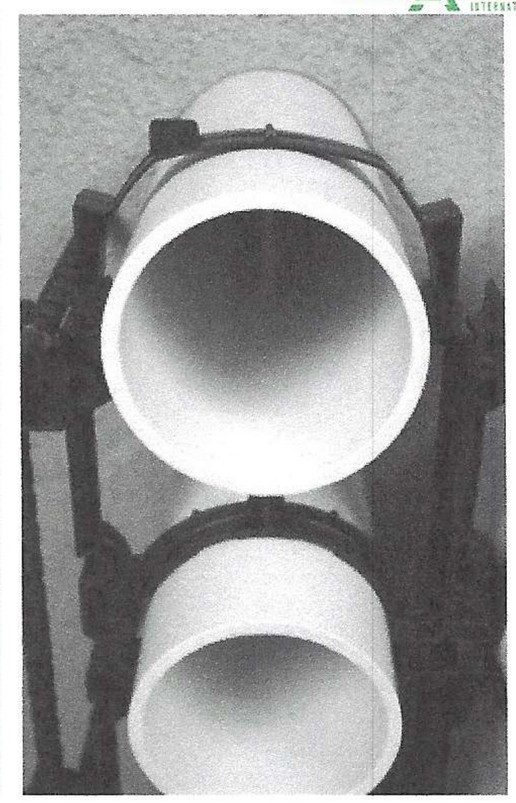

Intermediate & Base Spacer Dimensions*

	1" Separation			1-1/2" Separation			2" Separation			3" Separation		
Trade Size	R	A	C	R	A	C	R	A	C	R	A	C
2	Saddle spacers only			1.2	4.0	1.5	1.2	4.5	2.0	1.2	5.5	3.0
3	Saddle spacers only			1.8	5.1	1.5	1.8	5.6	2.0	1.8	6.6	3.0
4	2.3	5.6	1.0	2.3	6.1	1.5	12.3	6.6	2.0	2.3	7.6	3.0
5	Saddle spacers only			2.9	7.3	1.5	2.9	7.9	2.0	2.9	8.9	3.0
6	–	–	–	3.3	8.2	1.5	3.4	6.7	2.0	3.4	9.0	3.0

• Base spacers provide a 3" separation between bottom row of ducts & trench floor. except for 4" x 1", which is 1-3/4".

• All Dimensions are in inches.

* Not UL Listed

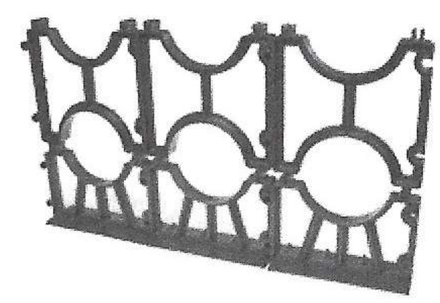

Intermediate Spacers*

	1" Separation			1-1/2" Separation			2" Separation			3" Separation		
Trade Size	Part No.	Std. Pack	Wgt. lbs.	Part No.	Std. Pack	Wgt lbs.	Part No.	Std. Pack	Wgt lbs.	Part No.	Std. Pack	Wgt lbs.
2	–	–	–	150-1	350	34	152-1	300	31	154-1	200	27
3	–	–	–	156-1	225	32	158-1	200	31	160-1	125	23
4	120-1	200	37	185-1	150	30	124-1	125	28	189-1	90	26
5	–	–	–	128-1	100	28	130-1	100	30	191-1	80	23
6	–	–	–	132-1	100	27	134-1	90	31	162-1	70	26

* Not UL Listed

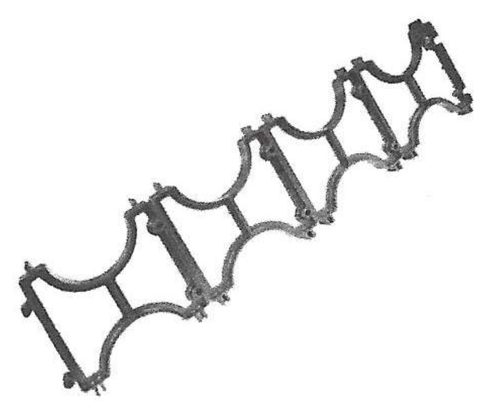

Base Spacers*

	1" Separation			1-1/2" Separation			2" Separation			3" Separation		
Trade Size	Part No.	Std. Pack	Wgt. lbs.	Part No.	Std. Pack	Wgt lbs.	Part No.	Std. Pack	Wgt lbs.	Part No.	Std. Pack	Wgt lbs.
2	–	–	–	151-1	250	31	153-1	225	33	155-1	225	35
3	–	–	–	157-1	175	31	159-1	155	28	161-1	150	32
4	121-1	175	35	186-1	140	39	125-1	140	42	190-1	120	40
5	–	–	–	129-1	120	42	131-1	120	42	192-1	100	38
6	–	–	–	133-1	100	32	135-1	100	42	163-1	95	38

* Not UL Listed

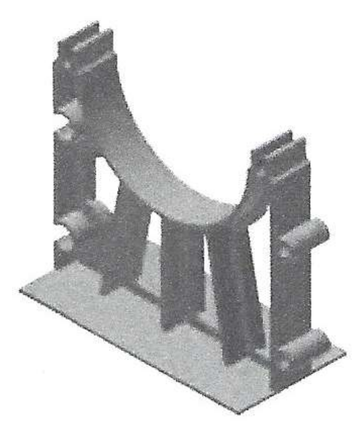

PVC Conduit & Fittings are not available in all markets.

Please contact your Allied representative or distributor for details.

NOTE: Special orders are non-cancelable, non-returnable and non-refundable

16100 S. Lathrop Ave., Harvey, IL 60426

Phone / 708.339.1610 • Toll-Free / 800.882.5543

www.alliedeg.com

PVC Couplings

allied TUBE & CONDUIT®
A PART OF atkore INTERNATIONAL

Couplings

Trade Size	Part Number	Unit Quantity	Outside (OD) Diameter (in)	Inside (ID) Diameter (in)	Length (L) (in)
1/2	59601	200	1.080	0.840	1.437
3/4	59602	125	1.300	1.050	1.703
1	59603	70	1.590	1.315	2.031
1-1/4	59604	40	2.000	1.660	2.156
1-1/2	59605	30	2.230	1.900	2.281
2	59606	40	2.720	2.375	2.406
2-1/2	59607	20	3.320	2.875	3.187
3	59608	40	4.000	3.500	3.437
3-1/2	59609	30	4.500	4.000	3.625
4	59610	20	5.000	4.500	3.750
5	59611	10	6.120	5.565	4.187
6	59612	8	7.370	6.625	4.562

Listed to UL651

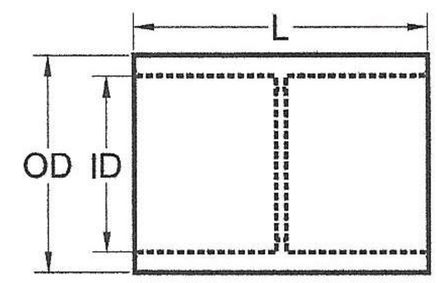

Fabricated Long Couplings

Trade Size	Part Number	Unit Quantity	Outside (OD) Diameter (in)	Inside (ID) Diameter (in)	Length (L) (in)
2	895124	15	2.559	2.393	5.000
2-1/2	895125	10	3.100	2.890	6.500
3	895126	10	3.769	3.515	8.000
4	895127	5	4.847	4.515	9.000
5	895128	5	6.003	5.593	10.500
6	895129	5	6.658	6.658	11.000
8	894495	1	8.652	7.981	12.500

Listed to UL651

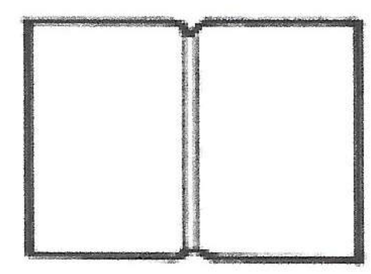

5° Couplings

Trade Size	Part Number	Unit Quantity	Outside (OD) Diameter (in)	Inside (ID) Diameter (in)	Length (L) (in)
2	802731	20	2.375	2.049	4.0
2-1/2	802732	12	2.875	2.445	5.5
3	802733	25	3.500	3.042	6.0
3-1/2	802734	15	4.000	3.521	7.0
4	802735	15	4.500	3.998	7.0
5	802736	8	5.565	5.018	7.5
6	802737	4	6.625	6.031	11.0

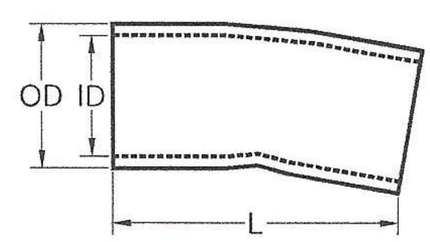

Expansion Couplings - Two Piece

Trade Size	Part Number	Unit Quantity	Expanded (E) (in)	Contracted (C) (in)	Travel (in)
1/2*	789646	25	12.00	8.00	4.00
3/4	789647	10	12.00	8.00	4.00
1	789648	10	12.50	8.50	4.00
1-1/4	789649	5	13.00	9.00	4.00
1-1/2	789650	5	13.00	9.00	4.00
2	789651	25	13.25	9.25	4.00
2-1/2*	789652	12	13.25	9.25	4.00
3	789653	12	22.25	14.25	8.00
3-1/2*	789654	6	22.25	14.25	8.00
4	789655	6	22.25	14.25	8.00
5*	789656	1	22.25	14.25	8.00
6	789657	1	22.25	14.25	8.00

Third-party certified to UL 651 except for trade sizes marked with an asterisk*

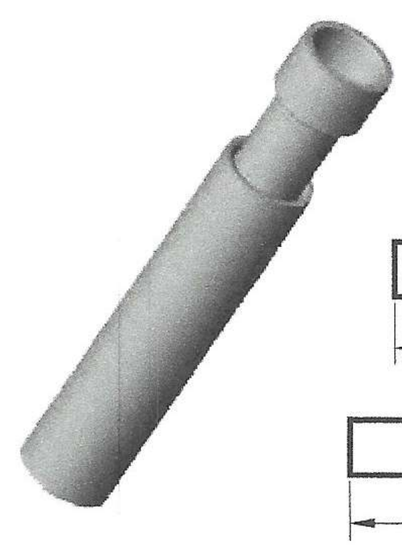

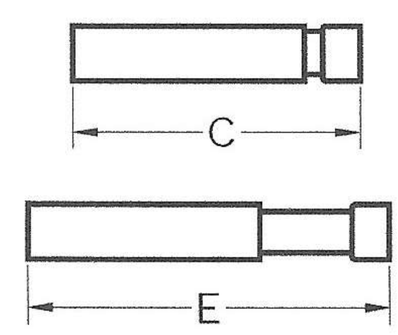

PVC Conduit & Fittings are not available in all markets.
Please contact your Allied representative or distributor for details.

NOTE: Special orders are non-cancelable, non-returnable and non-refundable

16100 S. Lathrop Ave., Harvey, IL 60426
Phone / 708.339.1610 • Toll-Free / 800.882.5543

PVC Adapters, Straps, & Meter Accessories

allied TUBE & CONDUIT®
A PART OF atkore INTERNATIONAL

Terminal Adapters

Trade Size	Part Number	Unit Quantity	A (in)	B (in)	Inside (ID) Diameter (in)	Length (L) (in)
1/2	59615	200	0.750	0.700	0.591	1.550
3/4	59616	125	1.000	0.675	0.790	1.750
1	59617	70	1.115	0.625	1.000	1.860
1-1/4	59618	40	1.300	0.640	1.311	2.125
1-1/2	59619	30	1.425	0.725	1.530	2.250
2	59620	40	1.150	0.800	1.970	2.100
2-1/2	59621	20	1.900	0.800	2.346	2.930
3	59622	40	2.000	0.815	2.915	3.055
3-1/2	59623	30	1.715	1.000	3.385	3.055
4	59624	20	1.990	0.815	3.850	3.215
5	59625	10	2.000	1.725	5.015	5.985
6	59626	8	2.130	1.875	6.025	6.500

Listed to UL651

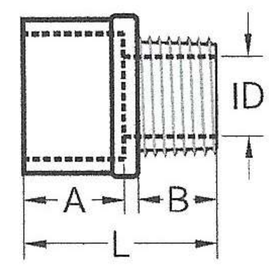

Female Adapters - NPT Tapered Thread

Trade Size	Part Number	Unit Quantity	A (in)	B (in)	Inside (ID) Diameter (in)	Length (L) (in)
1/2	59630	200	0.800	0.825	0.620	1.725
3/4	59631	125	0.800	1.000	0.820	1.900
1	59632	70	1.000	1.200	1.065	2.300
1-1/4	59633	40	1.015	1.300	1.395	2.425
1-1/2	59634	30	1.050	1.290	1.575	2.440
2	59635	40	1.075	1.375	2.050	2.550
2-1/2	59636	20	1.675	1.985	2.470	3.760
3	59637	40	1.630	2.150	3.090	4.100
3-1/2	59638	30	1.800	2.000	3.540	3.985
4	59639	20	1.755	2.185	4.025	4.210
5	59640	10	2.065	3.000	5.035	5.240
6	59641	8	2.065	3.000	6.045	5.235

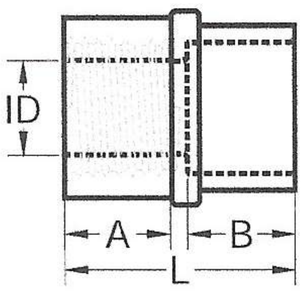

Meter Hubs

Trade Size	Part Number	Unit Quantity
1-1/4	802801	50
1-1/2	802802	25
2	802803	50

Listed to UL651

Meter Offsets

Trade Size	Part Number	Unit Quantity
1-1/4	59193	15
2	59194	8

Listed to UL651

Service Entrance Fittings

Trade Size	Part Number	Unit Quantity
1/2	59269	10
3/4	59270	10
1	59271	20
1-1/4	59272	20
1-1/2	59273	20
2	59274	5
2-1/2*	59275	5
3	59276	5
3-1/2*	59277	5
4	59278	1

Listed to UL651

Pipe Straps* - PVC - 2 Hole

Trade Size	Part Number	Unit Quantity
1/2	59280	300
3/4	59281	200
1	59282	200
1-1/4	59283	200
1-1/2	59284	200
2	59285	200

Listed to UL651

Pulling Elbow

Trade Size	Part Number	Unit Quantity
1/2	52400	75
3/4	52401	50

Listed to UL651

PVC Conduit & Fittings are not available in all markets.
Please contact your Allied representative or distributor for details.

NOTE: Special orders are non-cancelable, non-returnable and non-refundable

16100 S. Lathrop Ave., Harvey, IL 60426
Phone / 708.339.1610 • Toll-Free / 800.882.5543

PVC Fittings - Misc., & Solvent Cement

allied TUBE & CONDUIT®

A PART OF atkore INTERNATIONAL

End Cap

Trade Size	Part Number	Unit Quantity
1/2	59645	100
3/4	59646	100
1	59647	50
1-1/4	59648	25
1-1/2	59649	25
2	59125	50
2-1/2	59126	25
3	59127	25
4	59128	25
5	59129	25
6	59130	10

End Bell Molded

Trade Size	Part Number	Unit Quantity
1/2	59673	100
3/4	59674	100
1	59675	50
1-1/4	59676	50
1-1/2	59677	50
2	59678	40
2-1/2	59679	50
3	59680	50
3-1/2	59681	50
4	59682	50
5	59683	25
6	59684	15

Junction Box Adapters

Trade Size	Part Number	Unit Quantity
1/2	33715	100
3/4	33716	100
1	33717	100
1-1/4	33718	50
1-1/2	33719	50
2	33720	25
2-1/2	33721	10
3	33722	10
3-1/2	33723	10
4	33724	10

Reducer Bushings

Trade Size	Part Number	Unit Quantity
3/4 x 1/2	59897	100
1 x 1/2*	802738	300
1 x 3/4	59899	100
1-1/4 x 3/4*	802739	100
1-1/4 x 1*	59901	50
1-1/2 x 1*	802740	50
1-1/2 x 1-1/4*	59903	50
2 x 1*	802741	50
2 x 1-1/4*	802742	25
2 x 1-1/2	59905	25
2-1/2 x 2*	59906	25
3 x 2*	802743	25
3 x 2-1/2*	59909	25
4 x 2*	802744	15
4 x 3*	59908	20
4 x 3-1/2*	59910	20

UL Listed - **Bolded**

* Not UL Listed

Poly Plug with Pulling Eye

Trade Size	Part Number	Unit Quantity
2	802918	60
3	802919	30
4	802920	48
5	802921	30
6	802922	30

Conduit Cement #99

Size	Part Number	Unit Quantity
1/2 Pint	85177	24
Pint	85174	12
Quart	85175	12
Gallon	85176	6

Primer Clear

Size	Part Number	Unit Quantity
1/2 Pint	813088	24
Pint	813085	12
Quart	813087	12
Gallon	813091	6

- Purple primer and gray conduit cement available upon request.
- Contact your Allied Tube & Conduit Electrical Representative for more information

PVC Conduit & Fittings are not available in all markets.
Please contact your Allied representative or distributor for details.

NOTE: Special orders are non-cancelable, non-returnable and non-refundable

16100 S. Lathrop Ave., Harvey, IL 60426
Phone / 708.339.1610 • Toll-Free / 800.882.5543

www.alliedeg.com

4" SQUARE BOXES – WELDED WITH CONDUIT KO'S

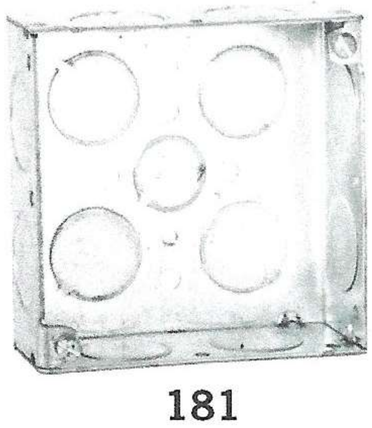
181

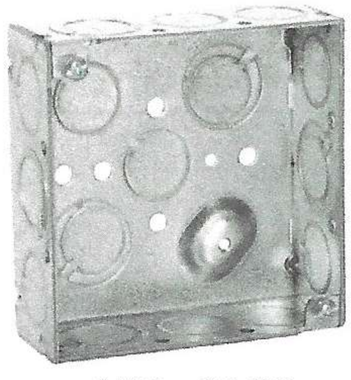
189, 8189

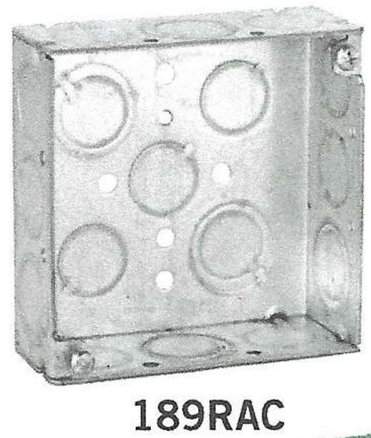
189RAC

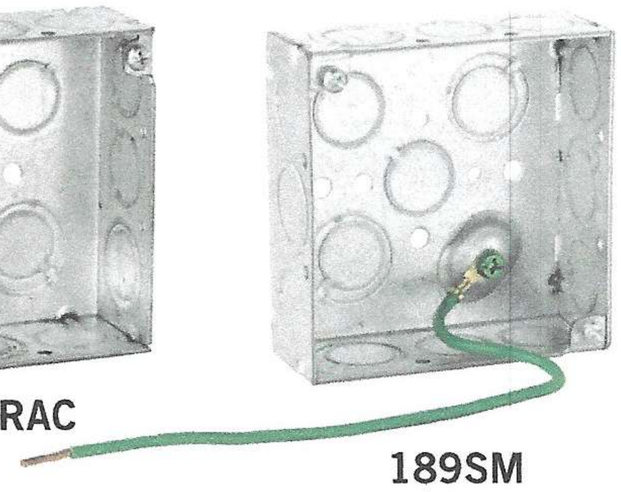
189SM

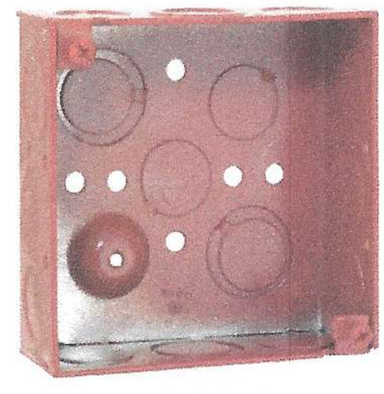
911-9

APPLICATIONS

- RACO® Boxes are installed in walls or ceilings for lighting fixtrues, switches or receptacles
- Square boxes are used where multiple conductor runs are split into two or more directions to bring power to a number of electrical devices

PRODUCT FEATURES

- Combination screw heads provide for faster installation
- TKO® Knockouts allow for design and installation flexibilit.
- Red boxes, covers and extensions for dedicated life safety alarm circuits

COMPLIANCE

- UL File E195978
- All RACO single gang, two gang, 4" square, and single gang gangable U.L. listed steel boxes are acceptable for use in 2-hour fire rated walls. For additional information, consult U.L. "Fire Resistance Directory" or the U.L. website at www.ul.com
- 600V Per U.L. 514-A, suitable for use without a bonding jumper in circuits up to 600 volts

CAT. #	DESCRIPTION	CUBIC INCHES (CM³)	KNOCKOUTS SIDES CONDUIT	KNOCKOUTS BOTTOM CONDUIT	STD. PKG.	BAR CODE
4" Square Box, 1-1/2" Deep – *Welded with Conduit KO's*						
181	—	21.0 (344.1)	(8) 3/4"	(1) 1/2", (4) 3/4"	50	—
189	600V, Raised Ground	21.0 (344.1)	(8) 1/2", (4) TKO®	(2) 1/2", (2) TKO®	50	—
8189	600V, Raised Ground	21.0 (344.1)	(8) 1/2", (4) TKO®	(2) 1/2", (2) TKO®	50	IIIIIIII
189RAC	600V	21.0 (344.1)	(8) 1/2", (4) TKO®	(2) 1/2", (2) TKO®	50	—
189SM	600V, Raised Ground, 10" #12 Stranded Copper Pigtail	21.0 (344.1)	(8) 1/2" (4) TKO®	(2) 1/2" (2) TKO®	50	IIIIIIII
911-9	600V, Raised Ground, Painted Red	21.0 (344.1)	(8) 1/2" (4) TKO®	(2) 1/2" (2) TKO®	50	—

SEE END OF SECTION (PG A67) FOR DETAILED DRAWINGS »

4" SQUARE EXTENSION RINGS

201, 8201

202

203, 8203

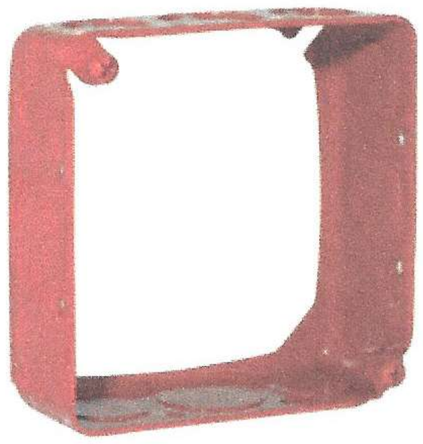

911-6

187

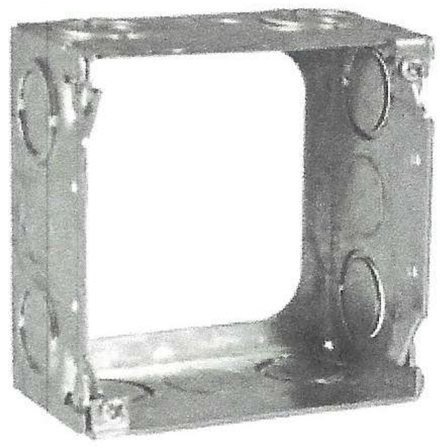

207

APPLICATIONS

- RACO® Extension rings provide a means for adding cubic capacity or as an outlet box for surface conduit

PRODUCT FEATURES

- Combination screw heads provide for faster installation
- Red boxes, covers and extensions for dedicated life safety alarm circuits
- RACO® 187 can be positioned to accommodate one or two switch boxes

COMPLIANCE

- UL File E195978

CAT. #	DESCRIPTION	CUBIC INCHES (CM3)	KNOCKOUTS SIDES CONDUIT	KNOCKOUTS BOTTOM CONDUIT	STD. PKG.	BAR CODE
4" Square Extension Rings, 1-1/2" Deep – *Drawn with Conduit KO's*						
201	—	22.5 (368.7)	(12) 1/2"	—	50	—
8201	—	22.5 (368.7)	(12) 1/2"	—	25	IIIIIIII
202	—	22.5 (368.7)	(8) 3/4"	—	50	—
203	—	22.5 (368.7)	(8) 1/2", (4) 3/4"	—	50	—
8203	—	22.5 (368.7)	(8) 1/2", (4) 3/4"	—	25	IIIIIIII
911-6	Painted Red	22.5 (368.7)	(8) 1/2", (4) 3/4"	—	50	—
187	Attaches to Switch Boxes	22.5 (368.7)	(8) 1/2", (4) 3/4"	—	25	IIIIIIII
4" Square Extension Rings, 2-1/8" Deep – *Welded with Conduit KO's*						
207	—	30.3 (496.5)	(6) 1/2", (6) 3/4"	—	25	—

4" SQUARE BOXES – WELDED WITH CONDUIT KO'S

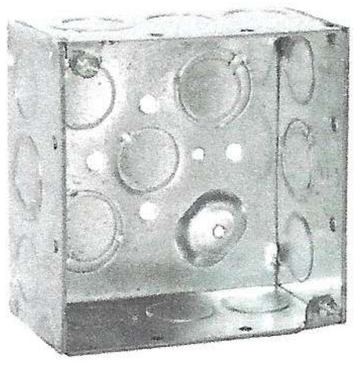

232, 8232

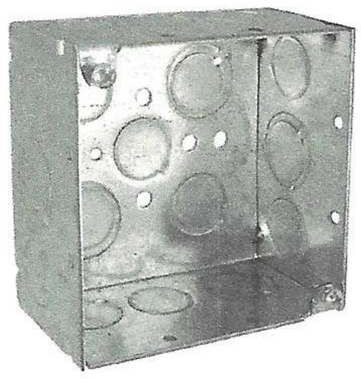

232RAC

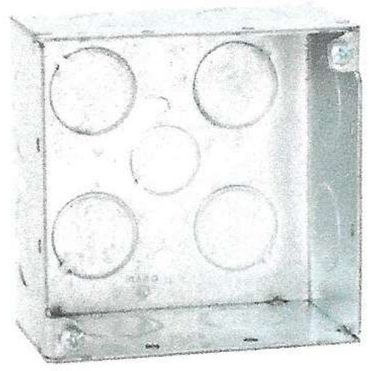

231, 8231

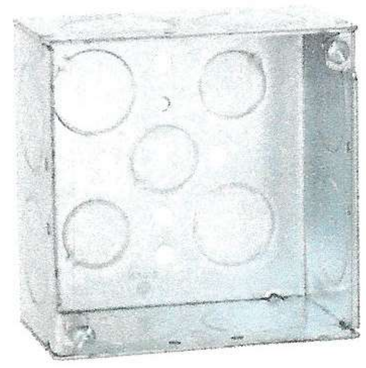

233, 8233

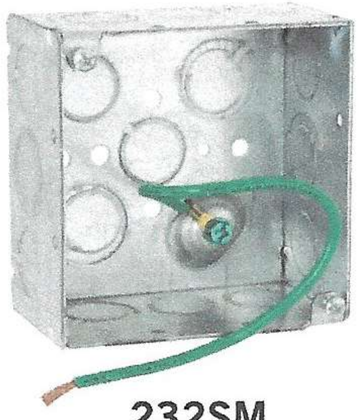

232SM

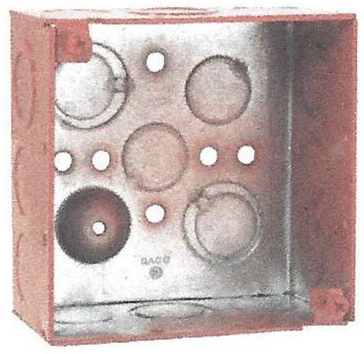

911-3

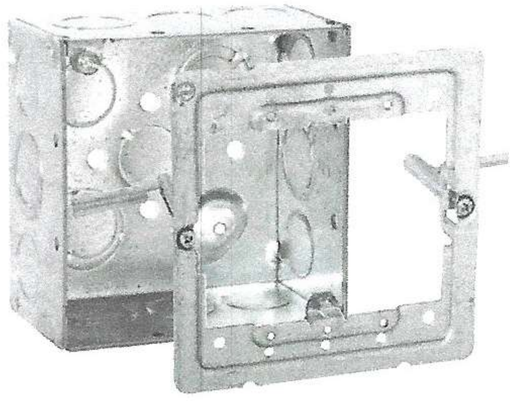

232-OW

CAT. #	DESCRIPTION	CUBIC INCHES (CM3)	KNOCKOUTS SIDES CONDUIT	KNOCKOUTS BOTTOM CONDUIT	STD. PKG.	BAR CODE
4" Square Box, 2-1/8" Deep – *Welded with Conduit KO's*						
232	600V, Raised Ground	30.3 (496.5)	(8) 1/2", (4) TKO®	(2) 1/2", (2) TKO®	25	—
8232	600V, Raised Ground	30.3 (496.5)	(8) 1/2", (4) TKO®	(2) 1/2", (2) TKO®	25	IIIIIIII
232RAC	600V	30.3 (496.5)	(8) 1/2", (4) TKO®	(3) 1/2", (2) TKO®	25	—
231	—	30.3 (496.5)	(8) 3/4"	(1) 1/2", (4) 3/4"	25	—
8231	—	30.3 (496.5)	(8) 3/4"	(1) 1/2", (4) 3/4"	25	IIIIIIII
233	—	30.3 (496.5)	(8) 1"	(3) 1/2", (2) 3/4"	25	—
8233	—	30.3 (496.5)	(8) 1"	(3) 1/2", (2) 3/4"	25	IIIIIIII
232SM	600V, Raised Ground, 10" #12 Stranded Copper Pigtail	30.3 (496.5)	(8) 1/2", (4) TKO®	(2) 1/2", (2) TKO®	25	IIIIIIII
911-3	600V, Painted Red	30.3 (496.5)	(8) 1/2", (4) TKO®	(2) 1/2", (2) TKO®	25	IIIIIII
232-OW	600V, Raised Ground, Old Work, 4" Sq. Box Mounting of One or Two Device Applications	30.3 (496.5)	(8) 1/2", (4) TKO®	(2) 1/2", (2) TKO®	25	IIIIIIII

APPLICATIONS

- RACO® Boxes are installed in walls or ceilings for lighting fixtures, switches or receptacles
- Square boxes are used where multiple conductor runs are split into two or more directions to bring power to a number of electrical devices

PRODUCT FEATURES

- Combination screw heads provide for faster installation
- TKO® knockouts offer greater flexibility with RACO patented combination 1/2" and 3/4" knockout
- Red boxes, covers and extensions for dedicated life safety alarm circuits

COMPLIANCE

- UL File E195978
- All RACO single gang, two gang, 4" square, and single gang gangable U.L. listed steel boxes are acceptable for use in 2-hour fire rated walls. For additional information, consult U.L. "Fire Resistance Directory" or the U.L. website at www.ul.com
- 600V Per U.L. 514-A, suitable for use without a bonding jumper in circuits up to 600 volts

U.S. Patent 7,300,025, B2 (232-OW)

SEE END OF SECTION (PG A67) FOR DETAILED DRAWINGS »

3-3/4" SQUARE BOXES – WELDED WITH CONDUIT KO'S

256

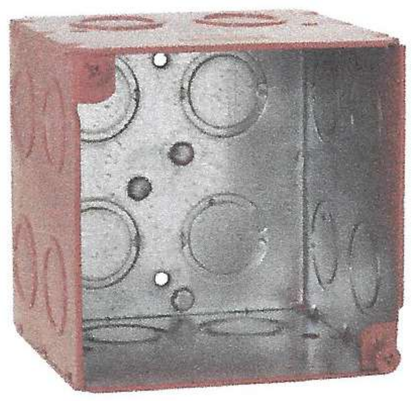

911-2

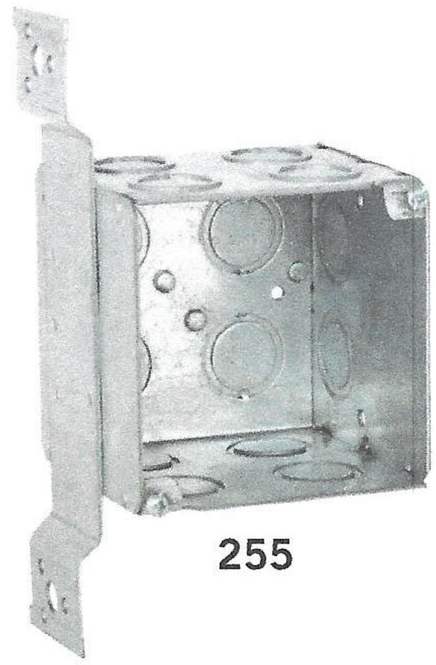

255

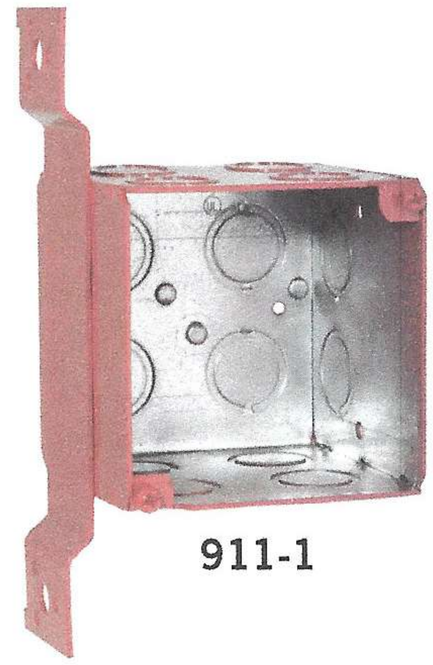

911-1

APPLICATIONS

- RACO® Red boxes and covers allow inspector or building owner to immediately identify alarm/fire or life safety systems

PRODUCT FEATURES

- 3-3/4" opening in wall allows for margin of error when using a 4" square cover
- Accepts all 4" square covers and mudrings
- Red boxes, covers and extensions for dedicated life safety alarm circuits

COMPLIANCE

- UL File E195978

CAT. #	DESCRIPTION	CUBIC INCHES (CM³)	KNOCKOUTS SIDES CONDUIT	KNOCKOUTS BOTTOM CONDUIT	STD. PKG.	BAR CODE
3-3/4" Square Large Capacity Boxes, 3-1/2" Deep – *Welded with Conduit KO's*						
256		45.0 (737.4)	(12) 1/2"-3/4" Concentric	(4) 1/2"-3/4" Concentric	25	IIIIIIII
911-2	Painted Red	45.0 (737.4)	(12) 1/2"-3/4" Concentric	(4) 1/2"-3/4" Concentric	25	—
3-3/4" Square Large Capacity Bracketed Boxes, 3-1/2" Deep – *Welded with Conduit KO's*						
255	FM Bracket	45.0 (737.4)	(10) 1/2"-3/4" Concentric	(4) 1/2"-3/4" Concentric	10	IIIIIII
911-1	FM Bracket, Painted Red	45.0 (737.4)	(10) 1/2"-3/4" Concentric	(4) 1/2"-3/4" Concentric	10	—

SEE END OF SECTION (PG A67) FOR DETAILED DRAWINGS »

SQUARE BOXES & COVERS

4" SQUARE COVERS

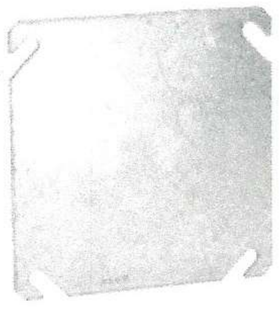

752, 8752, 8752-5

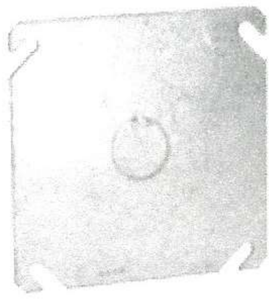

753, 8753, 8753-5

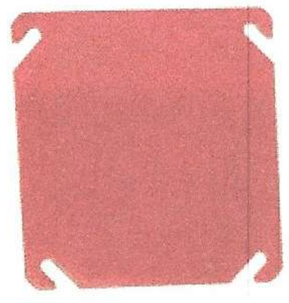

911-8

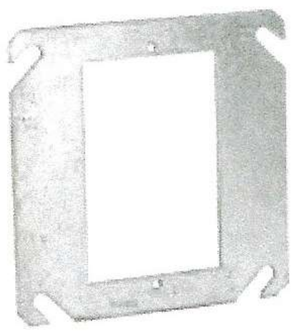

787

774, 775, 8775
782

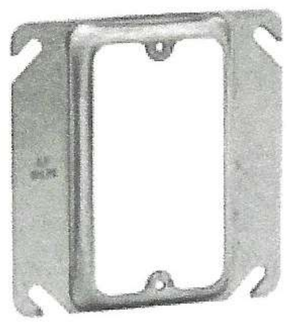

771, 8771, 772, 8772
773, 8773, 768, 8768

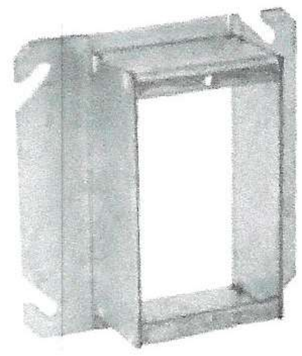

785, 786

APPLICATIONS

- RACO® covers are used to close an outlet box
- Raised device covers are used for mounting switches or receptacles

PRODUCT FEATURES

- Red boxes, covers and extensions for dedicated life safety alarm circuits
- Angled mounting slots compensate up to 12° for box misalignment

COMPLIANCES

- UL File E195978
- CSA File LR-1082

CATALOG #	DESCRIPTION	CUBIC INCHES (CM3)	STD. PKG.	BARCODE
4" Square Flat Covers				
752	Flat, Blank	—	50	—
8752	Flat, Blank	—	50	|||||||
8752-5*	Flat, Blank	—	50	|||||||
753	Flat, 1/2" KO in Center	—	50	—
8753	Flat, 1/2" KO in Center	—	50	|||||||
8753-5*	Flat, 1/2" KO in Center	—	50	|||||||
911-8	Flat, Blank, Painted Red	—	50	|||||||
4" Square Single Device Covers				
787	Flat	—	25	|||||||
771	Raised 1/4"	1.5 (24.6)	100	—
8771	Raised 1/4"	1.5 (24.6)	25	|||||||
782	Raised 1/2" Tile	3.5 (57.3)	25	|||||||
772	Raised 1/2" Drawn	3.5 (57.3)	100	—
8772	Raised 1/2" Drawn	3.5 (57.3)	50	|||||||
768	Raised 5/8"	4.5 (73.7)	50	—
8768	Raised 5/8"	4.5 (73.7)	25	|||||||
773	Raised 3/4"	5.5 (90.1)	50	—
8773	Raised 3/4"	5.5 (90.1)	25	|||||||
774	Raised 1"	7.5 (122.9)	25	|||||||
775	Raised 1-1/4"	9.5 (115.6)	25	—
8775	Raised 1-1/4"	9.5 (115.6)	25	|||||||
785	Raised 1-1/2"	11.3 (185.2)	25	—
786	Raised 2"	14.5 (237.6)	25	—

**5 Bundles of 10 – sold in carton quantities only*

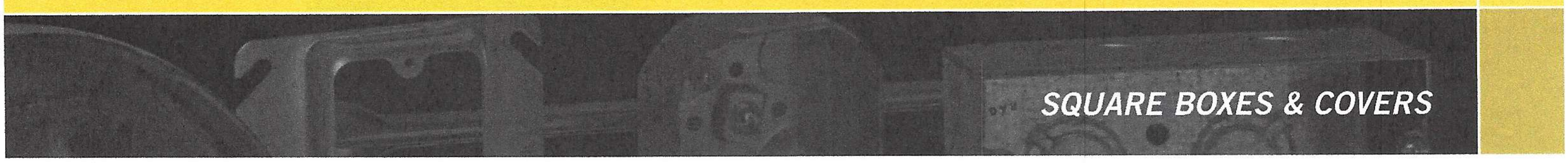

4" SQUARE COVERS

791

777, 8777-0

778, 8778

769, 8769

779, 8779

780

781, 8781

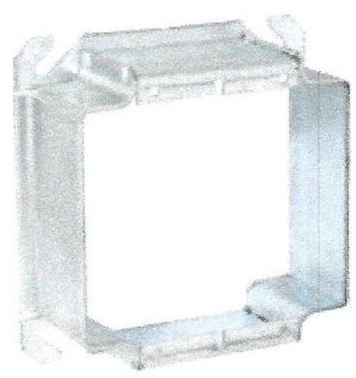
795, 796

CATALOG #	DESCRIPTION	CUBIC INCHES (CM3)	STD. PKG.	BARCODE
4" Square Two Device and Tile Covers				
791	Flat	—	25	|||||||
777	Raised, 1/4", Drawn	3.0 (49.2)	50	—
8777-0	Raised, 1/4", Drawn	3.0 (49.2)	10	|||||||
778	Raised, 1/2", Drawn	5.5 (90.1)	50	—
8778	Raised, 1/2", Drawn	5.5 (90.1)	25	|||||||
769	Raised, 5/8", Drawn	7.3 (119.6)	50	—
8769	Raised, 5/8", Drawn	7.3 (119.6)	25	|||||||
779	Raised, 3/4", Drawn	8.8 (144.2)	50	—
8779	Raised, 3/4", Drawn	8.8 (144.2)	25	|||||||
780	Raised, 1", Drawn	12.0 (196.6)	25	|||||||
781	Raised, 1-1/4", Drawn	15.0 (245.8)	25	—
8781	Raised, 1-1/4", Drawn	15.0 (245.8)	25	|||||||
795	Raised, 1-1/2", Welded	15.5 (253.9)	25	—
796	Raised, 2", Welded	20.5 (335.9)	25	—

APPLICATIONS

- Raised device covers are used for mounting switches or receptacles
- Low voltage partitions may be added to conduit-type boxes to divide power from voice/data

PRODUCT FEATURES

- Angled mounting slots compensate up to 12° for box misalignment

COMPLIANCE

- UL File E195978
- CSA File LR-1082

SQUARE BOXES & COVERS

4" SQUARE PARTITIONS

706RAC, 707RAC

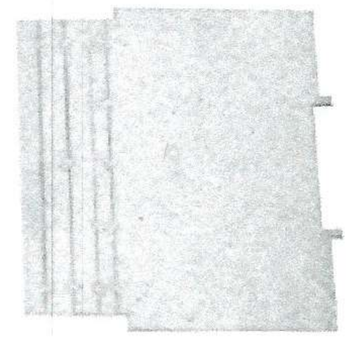

708, 709

APPLICATIONS

- Low voltage partitions may be added to conduit-type boxes to divide power from voice/data
- Must be used with raised covers

PRODUCT FEATURES

- Partition divides 4" square boxes into two compartments
- Use with two-device covers which have a slot for the partition
- Partition is scored so it can be broken at the proper depth of box and cover combination
- Helpful hint: Assemble the box with the partition in place before breaking off at the scored tab. This will prevent you from breaking off more tab than needed

COMPLIANCES

- UL File E195978
- CSA File LR-1082

CAT. #	DESCRIPTION	STD. PKG.	BARCODE
Low Voltage Partitions* for 1-1/2" Depth Boxes and 2-Device Covers			
706RAC	Fits 1/4", 1/2", 3/4" or 1" Cover Depth *(#777, 778, 8778, 779, 8779, 780)*	25	—
708	Fits 1-1/4", 1-1/2" or 2" Cover Depth *(#781, 8781, 795, 796)*	25	—
Low Voltage Partitions* for 2-1/8" Depth Boxes and 2-Device Covers			
707RAC	Fits 1/4", 1/2", 3/4" or 1" Cover Depth *(#777, 778, 8778, 779, 8779, 780)*	25	—
709	Fits 1-1/4", 1-1/2" or 2" Cover Depth *(#781, 8781, 795, 796)*	25	—

**Low voltage partitions are not UL Listed*
Boxes, covers, and partitions must be ordered separately.
For 1-1/2" deep box with 5/8" cover, partition not available. For 2-1/8" deep box with 5/8" cover, use #708 partition.
Partitions are usable but not UL listed for 4-11/16" sq. box.

4" SQUARE FIXTURE COVERS

756-759, 767, 8756, 8767

896

897KH

APPLICATIONS

- Raised fixture covers are used where fixtures will be installed

PRODUCT FEATURES

- Angled mounting slots compensate up to 12° for box misalignment
- Swivel covers restricted to 20° swing from vertical
- KWIK-HANG® 897KH allows easy installation of high bay lighting fixtures. Fixture rests in position while wiring is completed

COMPLIANCES

- UL File E195978
- CSA File LR-1082

Patent Pending (897KH)

CAT. #	DESCRIPTION	CUBIC INCHES (CM³)	RECOMMENDED MAX. LOADS CEILING FAN (DYNAMIC) LBS.	RECOMMENDED MAX. LOADS FIXTURE (STATIC) LBS.	STD. PKG.	BAR CODE
4" Square Fixture Covers						
767	Raised, 1/2" Open, Ears 2-3/4" O.C.	3.0 (49.2)	No	50	25	—
8767	Raised, 1/2" Open, Ears 2-3/4" O.C.	3.0 (49.2)	No	50	25	|||||||
756	Raised, 5/8" Open, Ears 2-3/4" O.C.	4.0 (65.5)	No	50	100	—
8756	Raised, 5/8" Open, Ears 2-3/4" O.C.	4.0 (65.5)	No	50	25	|||||||
759	Raised, 3/4" Open, Ears 2-3/4" O.C.	5.0 (81.9)	No	50	25	|||||||
757	Raised, 1" Open, Ears 2-3/4" O.C.	6.8 (111.4)	No	50	25	|||||||
758	Raised, 1-1/4" Open, Ears 2-3/4" O.C.	8.5 (139.3)	No	50	25	—
4" Square Swivel Fixture Covers						
896	For 4" Sq. Boxes, 1/2" or 3/4" Pipe	—	No	50	25	—
NEW **897KH**	KWIK-HANG® for 4" Sq. Boxes, 1/2" or 3/4" Pipe	—	No	50	25	—

4" SQUARE EXPOSED WORK COVERS

C3™ CRUSHED CORNER COVERS

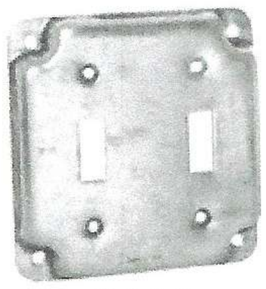
800C

801C

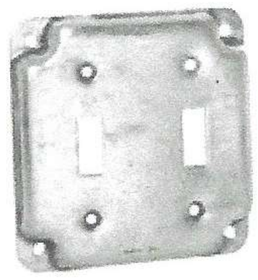
803C

804C

805C

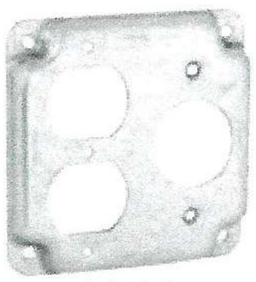
806C

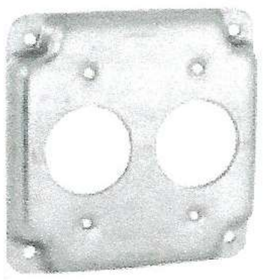
807C

808C

809C

810C

811C

812C

813C

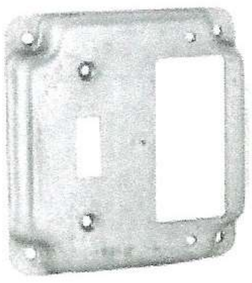
814C

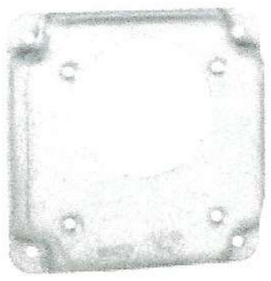
815C

816C

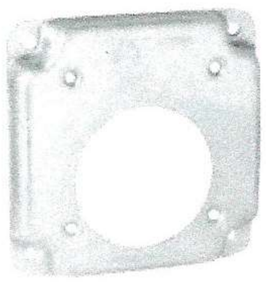
817C

830C

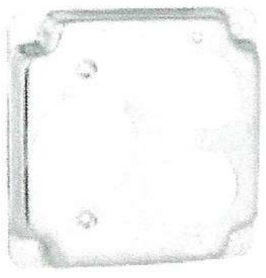
831C

902C

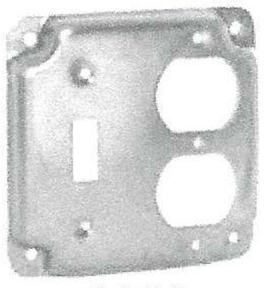
906C

907C

915C

CATALOG #	DESCRIPTION	CUBIC IN. (CM3)	STD. PKG.	BARCODE
4" Square, Crushed Corner Covers – *Raised 1/2"*				
800C	1 Toggle Switch	6.5 (106.5)	10	IIIIIIII
801C	1 Receptacle 1.406" Dia.	6.5 (106.5)	10	IIIIIIII
803C	2 Toggle Switches	6.5 (106.5)	10	IIIIIIII
804C	Blank, No Holes	6.5 (106.5)	10	IIIIIIII
805C	1 Toggle Switch and 1 Receptacle 1.406" Dia.	6.5 (106.5)	10	IIIIIIII
806C	1 Duplex and 1 Receptacle 1.406" Dia.	6.5 (106.5)	10	IIIIIIII
807C	2 Receptacles 1.406" Dia.	6.5 (106.5)	10	IIIIIIII
808C	1 GFCI	6.5 (106.5)	10	IIIIIIII
809C	2 GFCI	6.5 (106.5)	10	IIIIIIII
810C	30-50A Receptacle 2.141" Dia.	6.5 (106.5)	10	IIIIIIII
811C	30A Locking 1.719" Dia.	6.5 (106.5)	10	IIIIIIII
812C	20A Receptacle 1.620" Dia.	6.5 (106.5)	10	IIIIIIII
813C	30-60A Receptacle 2.625" Dia.	6.5 (106.5)	10	IIIIIIII
814C	1 GFCI and 1 Toggle Switch	6.5 (106.5)	10	IIIIIIII
815C	1 Receptacle 2.165" Dia., Offset	6.5 (106.5)	10	IIIIIIII
816C	1 Receptacle 2.480" Dia.	6.5 (106.5)	10	IIIIIIII
817C	1 Receptacle 2.275" Dia., Offset	6.5 (106.5)	10	IIIIIIII
830C	1 Receptacle 2.255" Dia.	6.5 (106.5)	10	IIIIIIII
831C	1 Duplex, 1 20A Twist Lock® 1.620" Dia.	6.5 (106.5)	10	IIIIIIII
902C	1 Duplex Receptacle	6.5 (106.5)	10	IIIIIIII
906C	1 Duplex Receptacle and 1 Toggle Switch	6.5 (106.5)	10	IIIIIIII
907C	2 Duplex Receptacles	6.5 (106.5)	10	IIIIIIII
915C	1 GFCI and 1 Duplex Receptacle	6.5 (106.5)	10	IIIIIIII

APPLICATIONS

- RACO® surface covers are used to support switches or receptacles in areas where the box is surface mounted or positioned in exposed work applications

PRODUCT FEATURES

- RACO® exposed work covers include required hardware for mounting the receptacle(s)
- RACO® Exposed work covers meet the requirements of the 2014 NEC Article 250.146 (A). No bonding jumper is required for covers with:
  (1) Crushed corners
  (2) Two or more device attachment screws
  (3) A lockwasher or equivalent
- Hardware and cover are packed in a poly-bag with printed catalog number, compliances and installation instructions

COMPLIANCES

- UL File E195978

SQUARE BOXES & COVERS

4" SQUARE EXPOSED WORK COVERS

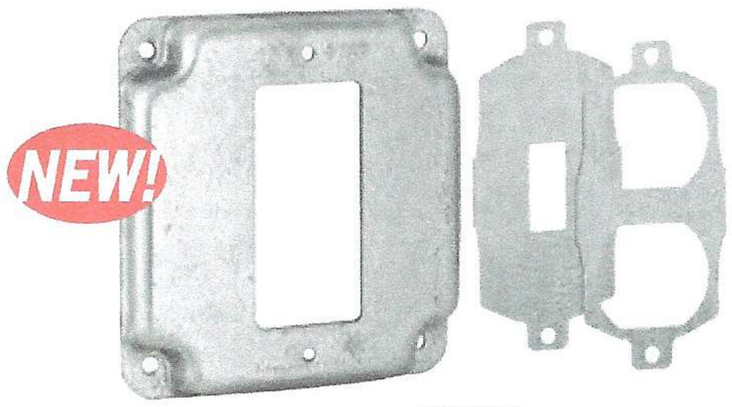

808U

C3™ CRUSHED CORNER COVERS

809U

808

809

814

915

APPLICATIONS

- RACO® surface covers are used to support switches or receptacles in areas where the box is surface mounted or positioned in exposed work applications

PRODUCT FEATURES

- RACO® exposed work covers include required hardware for mounting the receptacle(s)
- RACO® Exposed work covers meet the requirements of the 2014 NEC Article 250.146 (A). No bonding jumper is required for covers with:
  (1) Crushed corners
  (2) Two or more device attachment screws
  (3) A lockwasher or equivalent
- Hardware and cover are packed in a poly-bag with printed catalog number, compliances and installation instructions
- Non-crushed corner covers allow for additional wiring capacity for GFCI's and dimmers

COMPLIANCES

- UL File E195978

Patent Pending (808U and 809U)

CATALOG #	DESCRIPTION	CUBIC IN. (CM³)	STD. PKG.	BARCODE
4" Square Crushed Corner Covers – *Raised 1/2"*				
NEW 808U	Universal for 1 Device: 1 GFCI, 1 Duplex or 1 Toggle (Insert Plates)	6.5 (106.5)	10	IIIIIIII
NEW 809U	Universal for 2 Device: 2 GFCI, 2 Duplex or 2 Toggle (Insert Plates)	6.5 (106.5)	10	IIIIIIII
4" Square Extra-Capacity Non-Crushed Corner Covers – *Raised 1/2"*				
808	1 GFCI	7.3 (119.6)	10	IIIIIIII
809	2 GFCI	7.3 (119.6)	10	IIIIIIII
814	1 GFCI and 1 Toggle Switch	7.3 (119.6)	10	IIIIIIII
915	1 GFCI and 1 Duplex Receptacle	7.3 (119.6)	10	IIIIIIII

4-11/16" SQUARE BOXES AND EXTENSION RINGS – DRAWN WITH CONDUIT KO'S

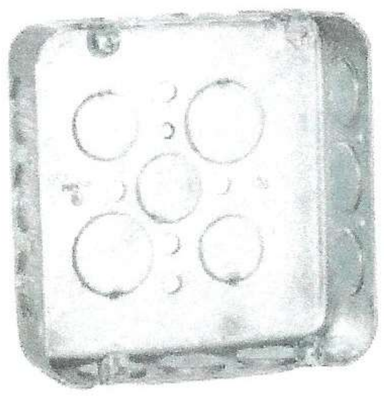

245

246

247

250

262

CAT. #	DESCRIPTION	CUBIC INCHES (CM³)	KNOCKOUTS SIDES CONDUIT	KNOCKOUTS BOTTOM CONDUIT	STD. PKG.	BAR CODE
4-11/16" Square Boxes, 1-1/2" Deep – *Drawn with Conduit KO's*						
245	—	29.5 (483.4)	(12) 1/2"	(3) 1/2", (2) 3/4"	25	—
246	—	29.5 (483.4)	(10) 3/4"	(3) 1/2", (2) 3/4"	25	—
247	—	29.5 (483.4)	(8) 1/2", (4) 3/4"	(3) 1/2", (2) 3/4"	25	—
4-11/16" Square Extension Rings – *Drawn with Conduit KO's*						
250	1-1/2" Depth	29.5 (483.4)	(8) 1/2", (4) 3/4"	—	25	IIIIIIII
262	2-1/8" Depth	43.0 (704.6)	(8) 1/2", (4) 3/4"	—	25	IIIIIIII

APPLICATIONS

- RACO® 4-11/16" Boxes are used for a wide variety of industrial applications where larger sized conductors or wiring devices are needed and more volume is required
- Drawn boxes are ideal for exposed work applications (surface mounted wiring)
- RACO® Extension rings provide a means for adding cubic capacity or as an outlet box for surface conduit

PRODUCT FEATURES

- Combination screw heads provide for faster installation

COMPLIANCE

- UL File E195978

SEE END OF SECTION (PG A68) FOR DETAILED DRAWINGS »

SQUARE BOXES & COVERS

4-11/16" SQUARE BOXES – WELDED WITH CONDUIT KO'S

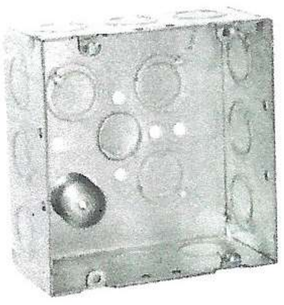
257, 8257, 8257SP

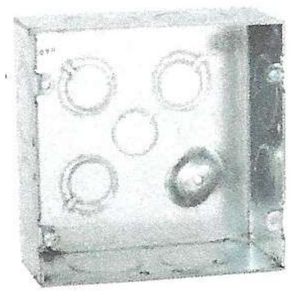
258

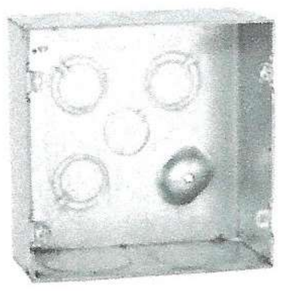
259

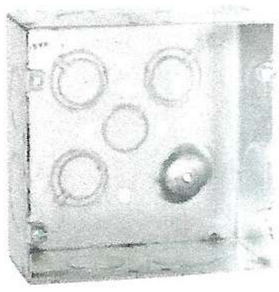
265, 8265, 8265SP

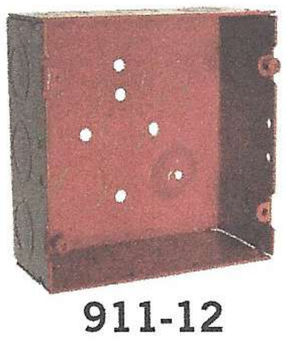
911-12

257SM

258SM

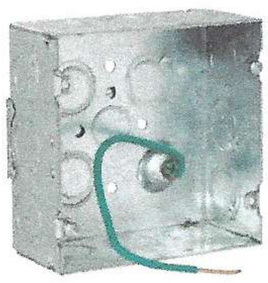
257F

257HWP

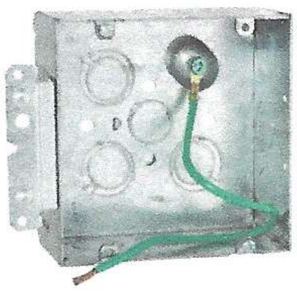
257H, 257HS

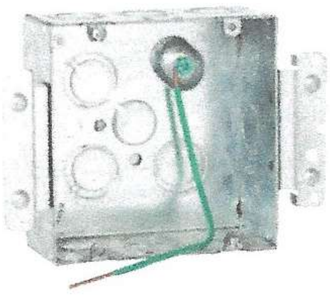
257M

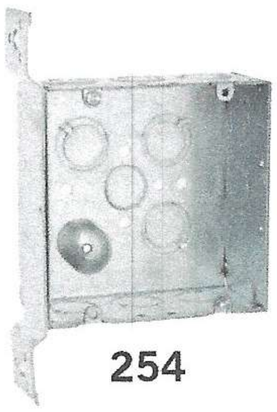
254

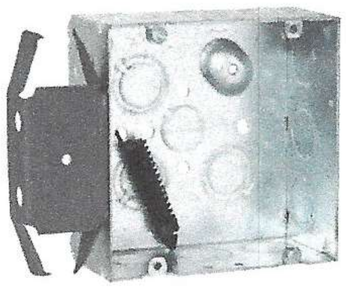
266 BOX-LOC®

APPLICATIONS

- RACO® 4-11/16" Boxes are used for a wide variety of industrial applications where larger sized conductors or wiring devices are needed and more volume is required

PRODUCT FEATURES

- Reference the Box Selection section in the front of this catalog for complete description of bracket types and features
- BOX-LOC® (MS) Bracket Box is a snap to install. Place the bracket on the open side of the stud first. Slots in the bracket engage the lip of the stud and actually crimp it as you press the bracket on the stud, quickly locking it in place
- Combination screw heads provide for faster installation
- TKO® knockouts allow for design and installation flexibility
- UBS Support - Welded to box, preset bend points to work with wall thickness 2-1/2" to 6"
- Red boxes, covers and extensions for dedicated life safety alarm circuits

COMPLIANCE

- UL File E195978
- 600V Per U.L. 514-A, suitable for use without a bonding jumper in circuits up to 600 volts

CAT. #	DESCRIPTION	CUBIC INCHES (CM³)	KNOCKOUTS SIDES CONDUIT	KNOCKOUTS BOTTOM CONDUIT	STD. PKG.	BAR CODE
4-11/16" Square Boxes, 2-1/8" Deep – *Welded with Conduit KO's*						
257	600V, Raised Ground	42.0 (688.2)	(12) TKO®	(1) 1/2", (3) TKO®	25	—
8257	600V, Raised Ground	42.0 (688.2)	(12) TKO®	(1) 1/2", (3) TKO®	25	IIIIIIII
NEW 8257SP	600V, Raised Ground	42.0 (688.2)	(12) TKO®	(1) 1/2", (3) TKO®	20	IIIIIIII
258	600V, Raised Ground	42.0 (688.2)	(8) 1"	(1) 1/2", (3) TKO®	25	—
259*	600V, Raised Ground	42.0 (688.2)	(6) 1-1/4"	(1) 1/2", (3) TKO®	25	—
265	600V, Raised Ground	42.0 (688.2)	(4) 3/4", (4) 1"	(1) 1/2", (3) TKO®	25	—
8265	600V, Raised Ground	42.0 (688.2)	(4) 3/4", (4) 1"	(1) 1/2", (3) TKO®	25	IIIIIIII
NEW 8265SP	600V, Raised Ground	42.0 (688.2)	(4) 3/4", (4) 1"	(1) 1/2", (3) TKO®	20	IIIIIIII
911-12	600V, Raised Ground, Painted Red	42.0 (688.2)	(12) TKO®	(1) 1/2", (3) TKO®	25	—
257SM	600V, Raised Ground, 10" #12 Stranded Copper Pigtail	42.0 (688.2)	(12) TKO®	(1) 1/2" (3) TKO®	25	IIIIIIII
258SM	600V, Raised Ground, 10" #12 Stranded Copper Pigtail	42.0 (688.2)	(8) 1"	(1) 1/2" (3) TKO®	25	IIIIIIII
257F	600V, Raised Ground, 8" #12 Solid Copper Pigtail, UBS	42.0 (688.2)	(12) TKO®	(1) 1/2" (3) TKO®	20	—
4-11/16" Square Bracketed Boxes, 2-1/8" Deep – *Welded with Conduit KO's*						
257H	600V, Raised Ground, 8" #12 Solid Copper Pigtail, UBS, HM	42.0 (688.2)	(12) TKO®	(1) 1/2" (3) TKO®	20	—
257HS	600V, Raised Ground, 10" #12 Stranded Copper Pigtail, UBS, HM	42.0 (688.2)	(12) TKO®	(1) 1/2" (3) TKO®	20	—
NEW 257HWP	Raised Ground, UBS, HM	42.0 (688.2)	(12) TKO®	(1) 1/2", (3) TKO®	20	—
257M	600V, Raised Ground, 8" #12 Solid Copper Pigtail, UBS, HM	42.0 (688.2)	(12) TKO®	(1) 1/2" (3) TKO®	20	—
254	600V, Raised Ground, FM	42.0 (688.2)	(9) TKO®	(1) 1/2", (3) TKO®	25	IIIIIIII
266	600V, Raised Ground, BOX-LOC®, MS Flush, Provided with Far-side support (part #978)	42.0 (688.2)	(9) TKO®	(1) 1/2" (3) TKO®	25	IIIIIIII

** Not UL Rated*

SEE END OF SECTION (PG A68) FOR DETAILED DRAWINGS »

4-11/16" SQUARE COVERS

832

833, 8833-5

911-11

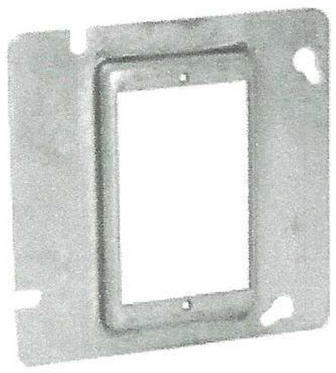

837, 8837

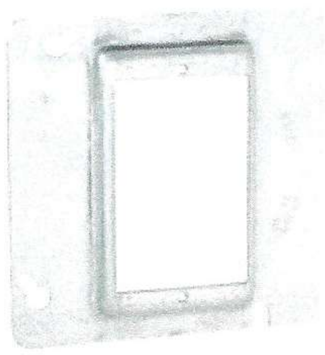

843

838

839

842

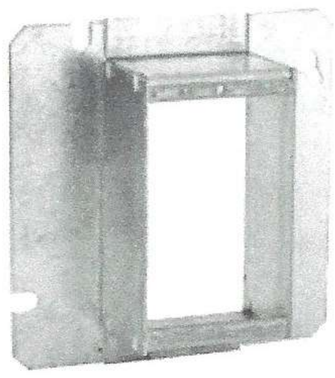

898

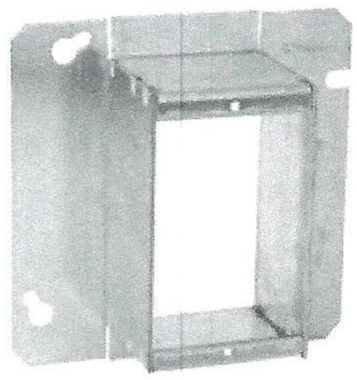

899

CATALOG #	DESCRIPTION	STD. PKG.	BARCODE
4-11/16" Square Flat Covers			
832	Flat, Blank	50	|||||||
833	Flat, 1/2" KO, Centered	50	|||||||
8833-5*	Flat, 1/2" KO, Centered	50	|||||||
911-11	Flat, Blank, Painted Red	50	—

*5 Bundles of 10 – sold in carton quantities only

CATALOG #	DESCRIPTION	CUBIC IN. (CM3)	STD. PKG.	BARCODE
4-11/16" Square Single Device and Tile Covers				
837	Raised 1/2"	3.5 (57.3)	25	—
8837	Raised 1/2"	3.5 (57.3)	25	|||||||
843	Raised 5/8"	4.5 (73.7)	25	|||||||
838	Raised 3/4"	5.5 (90.1)	25	—
839	Raised 1"	7.5 (122.9)	25	—
842	Raised 1-1/4"	9.5 (155.6)	25	—
898	Raised 1-1/2"	11.0 (180.2)	20	—
899	Raised 2"	16.0 (126.1)	20	—

APPLICATIONS

- Covers are used to close an outlet box
- Raised device covers are used for mounting switches or receptacles

PRODUCT FEATURES

- Red boxes, covers and extensions for dedicated life safety alarm circuits

COMPLIANCE

- UL File E195978
- CSA File LR-1082

SQUARE BOXES & COVERS

4-11/16" SQUARE COVERS AND PARTITIONS

841

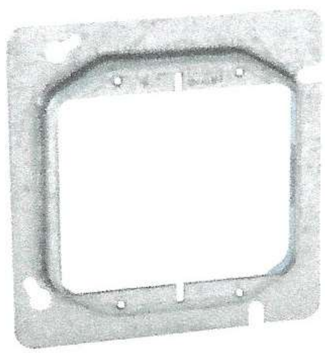
818

840

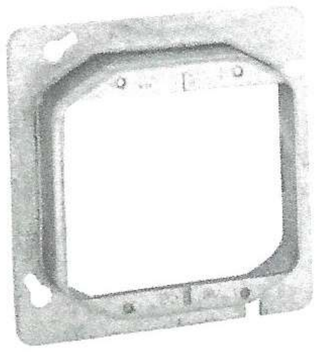
819

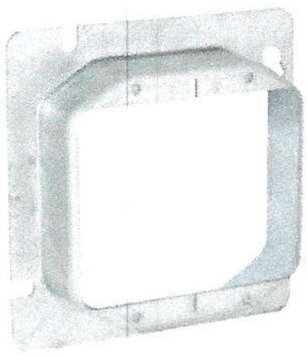
820

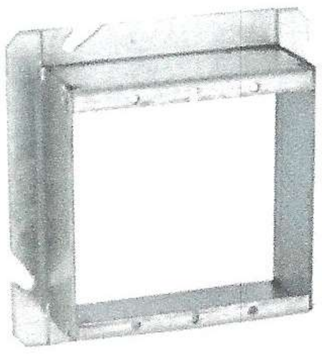
885

855, 859

911-16, 911-17

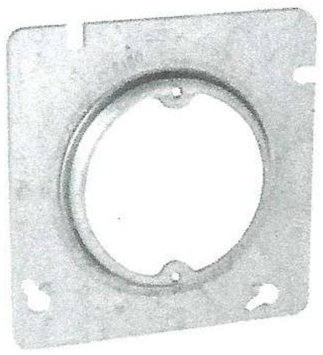
829

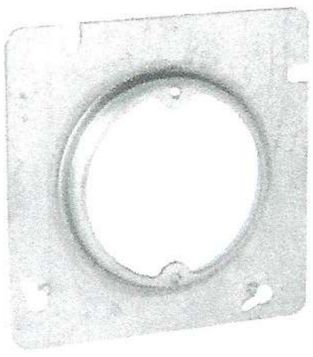
835

706RAC, 707RAC

708, 709

APPLICATIONS

- RACO® 4-11/16" raised device covers are for mounting switches or receptacles
- Raised fixture covers are used where fixtures will be installed
- Low voltage partitions may be added to conduit-type boxes to divide power from voice/data
- Partitions must be used with raised covers

PRODUCT FEATURES

- Red boxes, covers and extensions for dedicated life safety alarm circuits
- Partition divides 4" square boxes into two compartments
- Use partitions with two-device covers which have a slot for the partition
- Partition is scored so it can be broken at the proper depth of box and cover combination
- Helpful hint: Assemble the box with the partition in place before breaking off at the scored tab. This will prevent you from breaking off more tab than needed

COMPLIANCE

- UL File E195978
- CSA File LR-1082

CATALOG #	DESCRIPTION	CUBIC IN. (CM³)	STD. PKG.	BARCODE
4-11/16" Square Two Device and Tile Covers				
841	Raised 1/2"	5.5 (90.3)	25	IIIIIIII
818	Raised 5/8"	7.3 (119.6)	25	—
840	Raised 3/4"	8.8 (144.2)	25	—
819	Raised 1"	12.0 (196.6)	25	—
820	Raised 1-1/4"	15.0 (245.8)	25	—
885	Raised 1-1/2"	15.5 (254.0)	20	—
NEW 855	Raised 5/8", For Life Safety Appliances & Emergency Exit Signs	8.3 (136.0)	25	—
NEW 859	Raised 1-1/4", For Life Safety Appliances & Emergency Exit Signs	16.0 (262.0)	12	—
NEW 911-16	Raised 5/8", For Life Safety Appliances & Emergency Exit Signs, Painted Red	8.3 (136.0)	25	—
NEW 911-17	Raised 1-1/4", For Life Safety Appliances & Emergency Exit Signs, Painted Red	16.0 (262.0)	12	—

CAT. #	DESCRIPTION	CUBIC INCHES (CM³)	RECOMMENDED MAX. LOADS CEILING FAN (DYNAMIC) LBS.	RECOMMENDED MAX. LOADS FIXTURE (STATIC) LBS.	STD. PKG.	BAR CODE
4-11/16" Square Fixture Covers						
829	Raised 1/2", Open, Ears 2-3/4" O.C.	3.0 (49.6)	No	50	25	IIIIIIII
835	Raised 5/8", Open, Ears 2-3/4" O.C.	4.0 (65.5)	No	50	25	—

CAT. #	DESCRIPTION	STD. PKG.	BARCODE
Low Voltage Partitions* for 1-1/2" Depth Boxes and 2-Device Covers			
706RAC	Fits 1/4", 1/2", 3/4" or 1" Cover Depth *(#777, 778, 8778, 779, 8779, 780)*	25	—
708	Fits 1-1/4", 1-1/2" or 2" Cover Depth *(#781, 8781, 795, 796)*	25	—
Low Voltage Partitions* for 2-1/8" Depth Boxes and 2-Device Covers			
707RAC	Fits 1/4", 1/2", 3/4" or 1" Cover Depth *(#777, 778, 8778, 779, 8779, 780)*	25	—
709	Fits 1-1/4", 1-1/2" or 2" Cover Depth *(#781, 8781, 795, 796)*	25	—

**Low voltage partitions are not UL Listed*
Boxes, covers, and partitions must be ordered separately.
For 1-1/2" deep box with 5/8" cover, partition not available. For 2-1/8" deep box with 5/8" cover, use #708 partition.
Partitions are usable but not UL listed for 4-11/16" sq. box.

4-11/16" SQUARE EXPOSED WORK COVERS

856

857

858

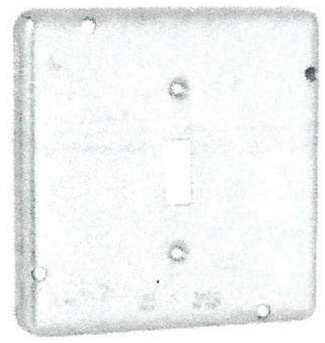
870RAC

878

887

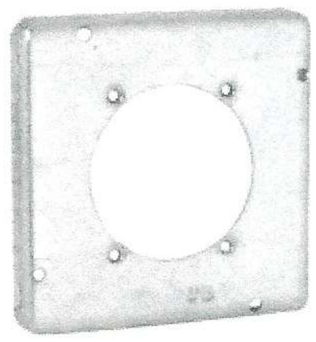
888

959

972

979

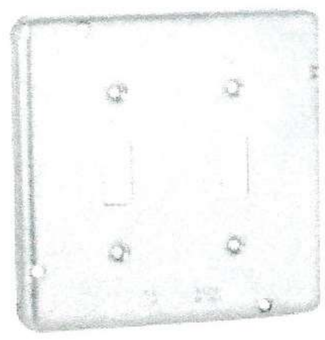
881RAC

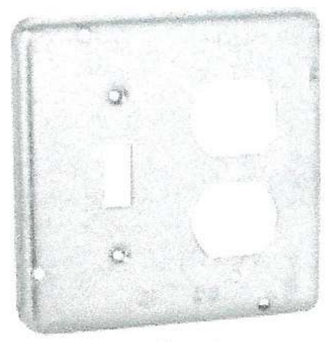
876

CATALOG #	DESCRIPTION	CUBIC IN. (CM3)	STD. PKG.	BARCODE
4-11/16" Exposed Work Covers				
856	1 Decorator device or GFCI	10.3 (168.7)	10	IIIIIIII
857	2 Decorator devices or GFCI	10.3 (168.7)	10	IIIIIIII
858	1 Toggle Switch and 1 GFCI	10.3 (168.7)	10	IIIIIIII
870RAC	1 Toggle Switch	10.3 (168.7)	10	IIIIIIII
878	30-50A Receptacle 2.141" Dia.	10.3 (168.7)	10	IIIIIIII
887	20A Receptacle 1.594" Dia.	10.3 (168.7)	10	IIIIIIII
888	30-60A Receptacle 2.625" Dia.	10.3 (168.7)	10	IIIIIIII
959	1 Duplex and 1 GFCI	10.3 (168.7)	10	IIIIIIII
972	1 Duplex Receptacle	10.3 (168.7)	10	IIIIIIII
979	2 Duplex Receptacles	10.3 (168.7)	10	IIIIIIII
881RAC	2 Toggle Switches	10.3 (168.7)	10	IIIIIIII
876	1 Toggle Switch and 1 Duplex Receptacle	10.3 (168.7)	10	IIIIIIII

APPLICATIONS

- RACO® surface covers are used to support switches or receptacles in areas where the box is surface mounted or positioned in exposed work applications

PRODUCT FEATURES

- RACO® exposed work covers include required hardware for mounting the receptacle(s)
- RACO® Exposed work covers meet the requirements of the 2014 NEC Article 250.146 (A). No bonding jumper is required for covers with:
  (1) Crushed corners
  (2) Two or more device attachment screws
  (3) A lockwasher or equivalent
- Hardware and cover are packed in a poly-bag with printed catalog number, compliances and installation instructions

COMPLIANCES

- UL File E195978

LIFE SAFETY SUPPORT PRODUCTS - IMMEDIATE IDENTIFICATION

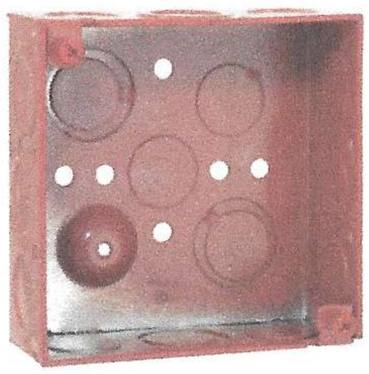
911-9

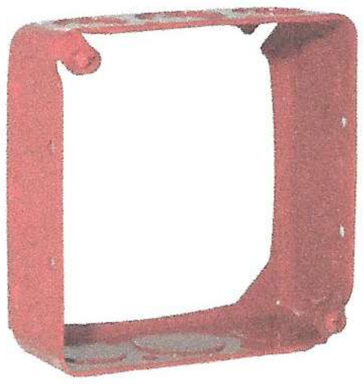
911-6

911-12

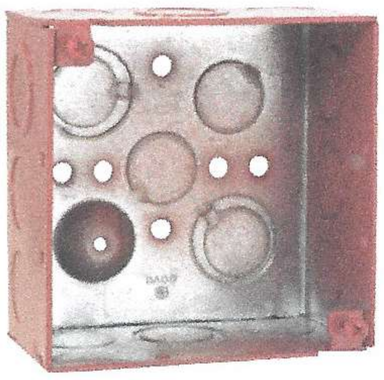
911-3

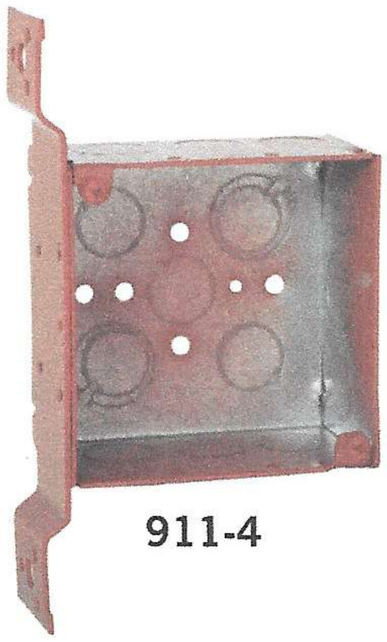
911-4

NEW!

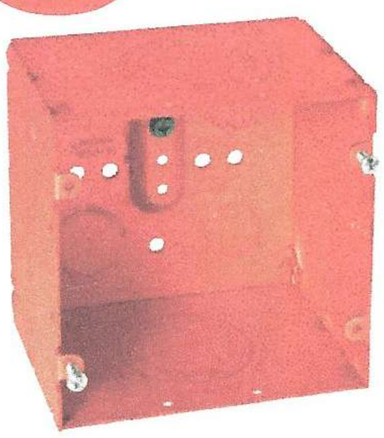
911-15

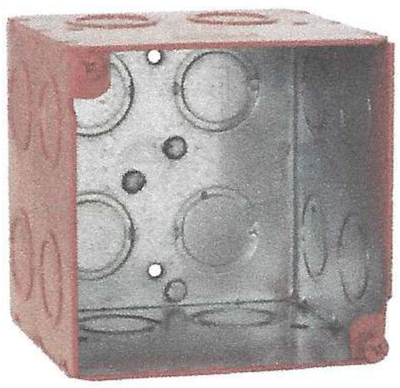
911-2

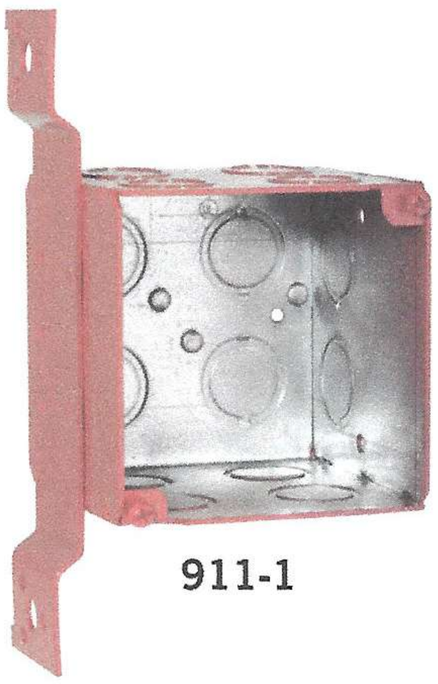
911-1

APPLICATIONS

- RACO® Red boxes and covers allow inspector or building owner to immediately identify alarm/fire or life safety systems

PRODUCT FEATURES

- 911-2, 911-1 boxes have 3-3/4" opening in wall that allows for a margin of error when using a standard 4" square cover
- 911-15 accepts all 4-11/16" square covers and mudrings
- Red boxes, covers and extensions for dedicated life safety alarm circuits

COMPLIANCES

- c UL us LISTED

  LISTED - UL E195978

CAT. #	DESCRIPTION	CUBIC INCHES (CM3)	KNOCKOUTS SIDES CONDUIT	KNOCKOUTS BOTTOM CONDUIT	STD. PKG.	BAR CODE
Life Safety Steel Wall Boxes and Extension Rings – Painted Red						
911-9	1-1/2" Depth, Welded, 4" Square	21.0 (344.1)	(8) 1/2", (4) TKO®	(2) 1/2", 2 TKO®	50	—
911-6	1-1/2" Depth, 4" Square, Drawn Extension Ring	22.5 (368.7)	(8) 1/2", (4) 3/4"	—	50	—
911-12	2-1/8" Depth, Welded, 4-11/16" Square	42.0 (688.2)	(12) TKO®	(1) 1/2", (3) TKO®	25	—
911-3	2-1/8" Depth, Welded, 4" Square	30.3 (496.5)	(8) 1/2", (4) TKO®	(3) 1/2", 2 TKO®	25	—
911-4	2-1/8" Depth, Welded, 4" Square, FM Bracket	30.3 (496.5)	(6) 1/2", (3) TKO®	(3) 1/2", 2 TKO®	25	—
NEW 911-15	3-1/4" Depth Back Box, Welded, 4-11/16" Square	66.7 (1093.0)	(2) 1/2" - 3/4" TKO, (2) 1" - 1-1/4"TKO, (2) 1" - 2" Conc. KO	(2) 3/4"- 1" TKO, (2) 1/2" KO	10	—
911-2	3-1/2" Depth, Welded, 3-3/4" Square	45.0 (737.4)	(12) 1/2"-3/4" Concentric	(4) 1/2"-3/4" Concentric	25	—
911-1	3-1/2" Depth, Welded, 3-3/4" Square, FM Bracket	45.0 (737.4)	(10) 1/2"-3/4" Concentric	(4) 1/2"-3/4" Concentric	10	—

SEE END OF SECTION (PG A67 AND A68) FOR DETAILED DRAWINGS »

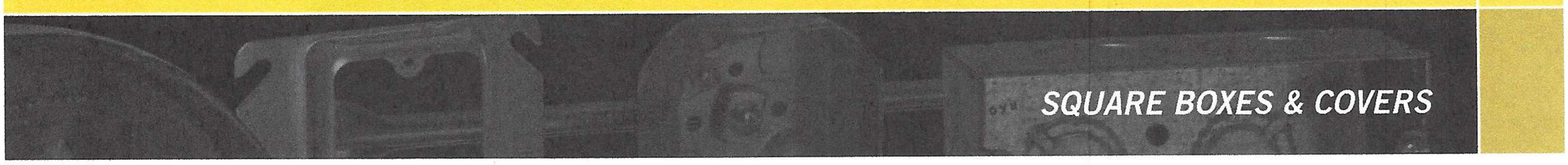

LIFE SAFETY SUPPORT PRODUCTS - IMMEDIATE IDENTIFICATION

911-16, 911-17

855, 859

911-8

911-11

APPLICATIONS

- RACO® Red boxes and covers allow inspector or building owner to immediately identify alarm/fire or life safety systems

PRODUCT FEATURES

- Red boxes, covers and extensions for dedicated life safety alarm circuits

COMPLIANCES

- c UL us LISTED

  LISTED - UL E195978

CATALOG #	DESCRIPTION	CUBIC IN. (CM3)	STD. PKG.	BARCODE
Life Safety Steel Wall Boxes Covers				
NEW 911-16	4-11/16" Sq. x 4" Sq. Adapter, 5/8" Raised, Painted Red	8.3 (136.0)	25	—
911-17	4-11/16" Sq. x 4" Sq. Adapter, 1-1/4" Raised, Painted Red	16.0 (262.0)	12	—
NEW 855	4-11/16" Sq. x 4" Sq. Adapter, 5/8" Raised	8.3 (136.0)	25	—
NEW 859	4-11/16" Sq. x 4" Sq. Adapter, 1-1/4" Raised	16.0 (262.0)	12	—
911-8	4" Sq., Flat Blank Cover, Painted Red	—	50	—
911-11	4-11/16" Sq., Flat Blank Cover, Painted Red	—	50	—

706RAC, 707RAC

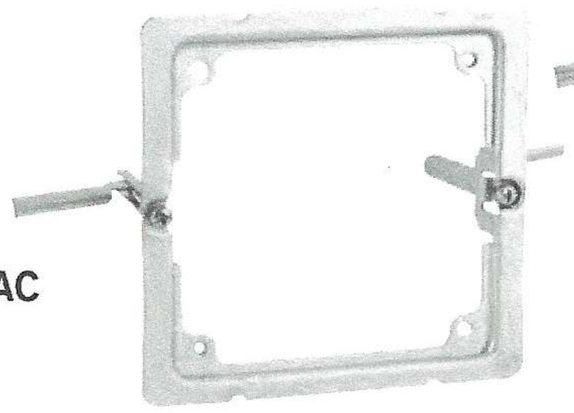

205RAC

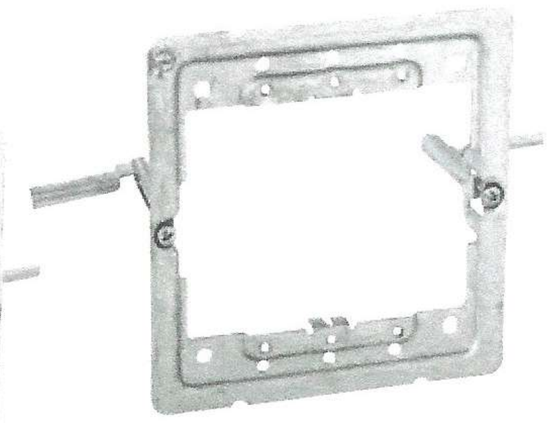

206RAC, 8206RAC

APPLICATIONS

- Low voltage partitions may be added to conduit-type boxes to divide power from voice/data
- Partitions must be used with raised covers
- RACO® RETRO-RING® is used to position any depth, 4" square steel junction box in a sheet rock covered wall cavity
- Use 205RAC is used in old work life safety appliance installations
- 206RAC is used in old work installations where one or two devices are required

PRODUCT FEATURES

- RACO® RETRO-RING® works in 3/8" to 1-1/2" thick wall or ceiling applications
- Small footprint is covered by most popular life safety devices
- Steel old work wings allow for secure mounting of box and devices to wall
- Includes one wall template per carton
- 206RAC allows for installation of steel low voltage partition for power/data applications. One or two devices mount directly to 206RAC

COMPLIANCE

- UL File E195973

U.S. Patent 7,300,025,B2 (205RAC, 206RAC, 8206RAC)

CATALOG #	DESCRIPTION	STD. PKG.	BARCODE
Low Voltage Box Partition			
706RAC	Box Partition for RETRO-RING® and 1-1/2" Depth, 4" Sq. Box	25	—
707RAC	Box Partition for RETRO-RING® and 2-1/8" Depth, 4" Sq. Box	25	—
Life Safety Steel Wall Box Mounting Brackets			
205RAC	Old Work, 4" Sq. Box Mounting of Life Safety Support	20	—
206RAC	Old Work, 4" Sq. Box Mounting of One or Two Device Applications	20	—
8206RAC	Old Work, 4" Sq. Box Mounting of One or Two Device Applications	10	IIIIIIII

**Low voltage partitions are not UL Listed*
Boxes, covers, and partitions must be ordered separately.
Partitions are usable but not UL listed for 4-11/16" sq. box.

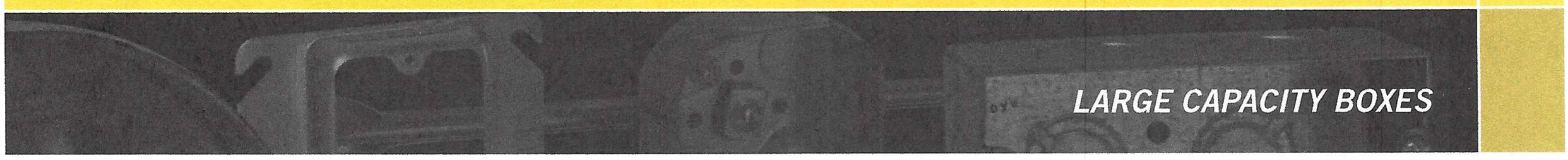

COVERS AND PARTITIONS

792

793

794

855, 859

981

	CAT. #	DESCRIPTION	CUBIC IN. (CM³)	FITS CAT. #	STD. PKG.	BARCODE
	3-Gang Raised Device Covers – *For 263 Box*					
NEW	792	5/8" Raised	10.3 (168.8)	263	10	—
NEW	793	3/4" Raised	12.7 (208.1)	263	10	—
NEW	794	1-1/4" Raised	24.2 (396.6)	263	5	—
	2-Gang Raised Device Cover – *For 4-11/16" Box*					
NEW	855	5/8" Raised, For Life Safety Appliances & Emergency Exit Signs	8.3 (136.0)	260 and 911-15	25	—
NEW	859	1-1/4" Raised, For Life Safety Appliances & Emergency Exit Signs	16.0 (262.0)	260 and 911-15	12	—
	Voltage Partition					
NEW	981	For 5/8", 3/4", 1-1/4" covers for 260 and 263 boxes	—	260 and 263	25	—

APPLICATIONS

- RACO® Large capacity boxes are used for audio, video, data and power applications providing ample space for Cat 6A and fiber optic cable bends
- 792, 793 and 794 covers are solely for RACO® 263 data box. The 3-gang raised covers are 5/8", 3/4" and 1-1/4" raised respectively
- 855 is designed to reduce 4-11/16" square box to 4" sq. box openings

PRODUCT FEATURES

- Use with standard 4" square single or double mudrings or 3 gangs special covers (263)
- 855 provides flush mounting of lighting controllers, exit signs and life safety appliances
- Accepts UL Listed Voltage Partition, Cat. No. 981

COMPLIANCE

- c UL us LISTED, Outlet Box, 731A

CONCRETE RINGS, CEILING BOX AND COVER PLATES

270RAC

271

272

277

273

278

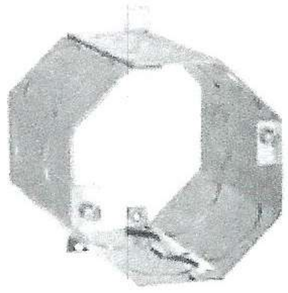
274, 279

275

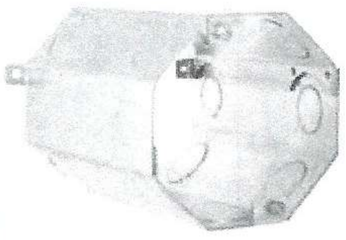
276

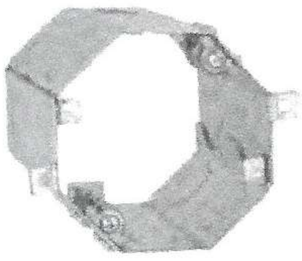
284 GORILLA-RING®

280

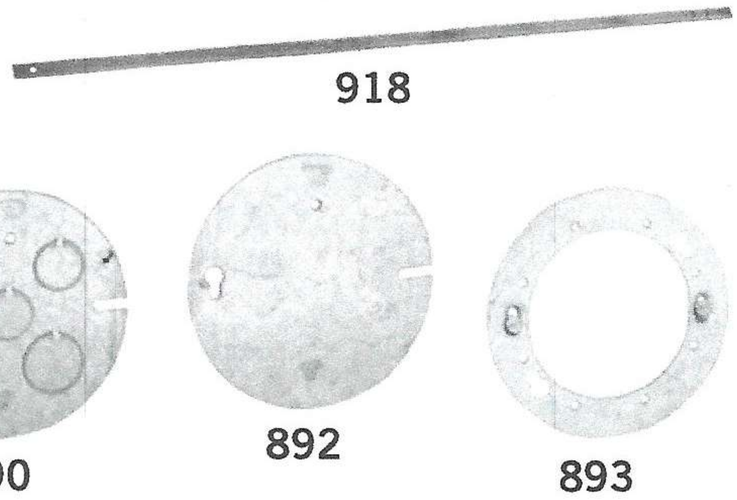
918

890

892

893

CAT. #	DESCRIPTION	CUBIC INCHES (CM3)	KNOCKOUTS	RECOMMENDED MAX. LOADS CEILING FAN (DYNAMIC) LBS.	RECOMMENDED MAX. LOADS FIXTURE (STATIC) LBS.	STD. PKG.	BAR CODE
Concrete Rings							
270RAC	2" Deep	24.5 (401.4)	Single Row KO's - 1/2" and 3/4"	No	50	25	—
271	2-1/2" Deep	30.8 (504.7)	Single Row KO's - 1/2" and 3/4"	No	50	25	IIIIIIII
272	3" Deep	37.0 (606.3)	Single Row KO's - 1/2" and 3/4"	No	50	25	—
277	3" Deep	37.0 (606.3)	Single Row KO's - 3/4" and 1"	No	50	25	—
273	3-1/2" Deep	43.0 (704.6)	Double Row KO's - 1/2" and 3/4"	No	50	20	—
278	3-1/2" Deep	43.0 (704.6)	Single Row KO's - 3/4" and 1"	No	50	20	—
274	4" Deep	49.3 (807.8)	Double Row KO's - 1/2" and 3/4"	No	50	20	—
279	4" Deep	49.3 (807.8)	Double Row KO's - 3/4" and 1"	No	50	20	—
275	5" Deep	61.5 (1007.8)	Double Row KO's - 1/2" and 3/4"	No	50	10	—
276	6" Deep	74.0 (1212.6)	Double Row KO's - 1/2" and 3/4"	No	50	10	—
284	4" Deep	49.3 (807.8)	Double Row KO's - 1/2" and 3/4"	35	75	6	—
Hung Ceiling Box							
280	3-1/2" Deep, includes an 890 cover	43.0 (704.6)	Double Row KO's (8) 1/2" and (8) 3/4"	No	—	20	—
918	30" Long Bars for Hung Ceiling Box	—	—	No	—	40	—

CAT. #	DESCRIPTION	STD. PKG.	UPC BAR CODE
Concrete Ring - Back Plates/Covers and Adapter Ring			
890	(3) 1/2" and (2) 3/4" KO's, O.D. Diam. 4-1/2"	25	IIIIIIII
892	Flat, Blank, O.D. Diam. 4-1/2"	25	—
893	O.D. Diam. 4-1/2", Joins Octagon Ext. Ring to Concrete Ring, Two Retained Screws	50	—

APPLICATIONS

- RACO® Concrete rings are used with poured deck (floor) in high-rise construction
- These boxes are installed on wooden or steel concrete forms. After the forms are removed, the box is flush with the concrete
- RACO® Ceiling Fan Concrete Ring 284 is listed for support of ceiling fans

PRODUCT FEATURES

- Flat sides provide excellent contact for locknuts
- External ears are used to nail the ring to the wood form
- Top cover is removable for before-pour work
- Ears on inside of box are for fixtures
- Waxed fixture ears prevent concrete from interfering with the threads
- A variety of cover plates are available
- Cover plate must be ordered separately with all RACO® concrete rings

COMPLIANCE

- UL File E195978

SEE END OF SECTION (PG A72) FOR DETAILED DRAWINGS »

BOX SUPPORT PRODUCTS

BRACES AND BRACKETS - BETWEEN STUDS

APPLICATIONS (9004R - 9006R, 9013R - 9015R)

- RACO® Braces and extenders are used for metal or wood stud box positioning

PRODUCT FEATURES

- Available for 1-1/2" or 2-1/8" deep boxes
- Locator dimples on face of bar allows for exact positioning of single or multiple boxes
- Dimple feature provides quick start of screws, and reinforcement to prevent box mounting screws from stripping out when box is mounted
- Design of adjustable brace allows ground screw to clear when box is mounted
- Boxes attach easily with self-tapping screws

COMPLIANCES

- c UL us LISTED

  LISTED - UL E195973

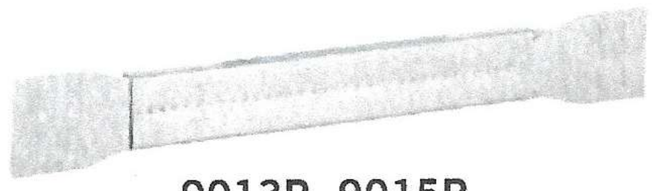

9013R, 9015R

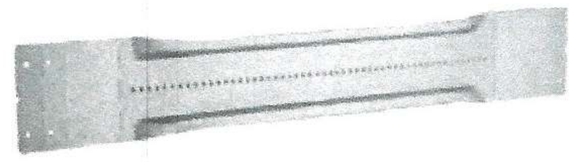

9004R, 9006R

9001

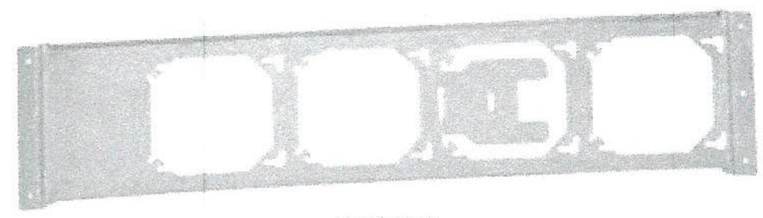

9002

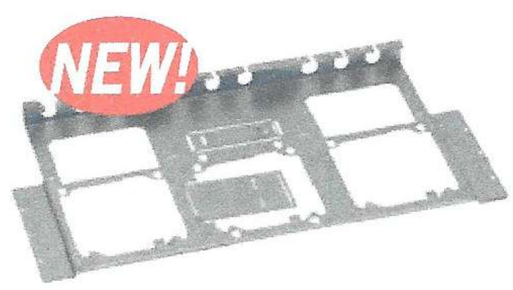

3PRAC

Rough-in Ready

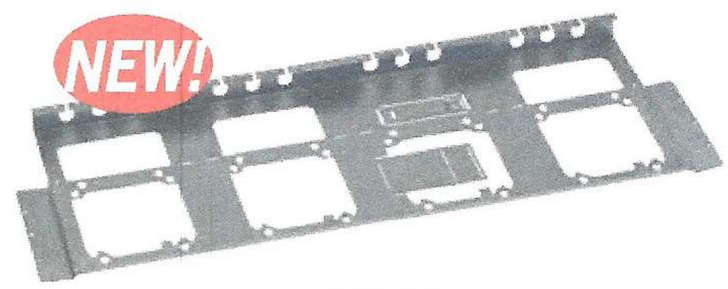

4PRAC

Rough-in Ready

APPLICATIONS (9001, 9002)

- Positions electrical boxes, plaster rings and low voltage devices between studs

PRODUCT FEATURES

- Fold-back stabilizer leg prevents bracket from being pushed back in wall cavity during drywall installation
- Designed for 2-1/2" or 3-1/2" studs.
- Mounts 4" or 4-11/16" sq. boxes
- Box can be mounted on ring without raised cover to save time by providing maximum work area inside box
- When mounted, raised cover is brought to within 1/16" of drywall everytime and will not bulge or break out drywall

COMPLIANCES

- c UL us LISTED

US Patent 7,902,457

CATALOG #	DESCRIPTION	STD. PKG.	BARCODE
Non-adjustable Box Mounting Brace – *For 4" and 4-11/16" Square Box*			
9004R	For 16" Stud Spacing, 1-1/2" or 2-1/8" Deep Box	50	—
9006R	For 24" Stud Spacing, 1-1/2" or 2-1/8" Deep Box	50	—
Adjustable Box Mounting Brace – *For 4" and 4-11/16" Square Box*			
9013R	Adjusts from 10-3/8" to 18", 1-1/2" or 2-1/8" Deep Box	50	—
9015R	Adjusts from 15" to 26", 1-1/2" or 2-1/8" Deep Box	50	—
Fixed Position Box Mounting Brackets – *For 4" and 4-11/16" Square Box*			
9001	(3) Box, for 16" On Center Studs	50	—
9002	(4) Box, for 24" On Center Studs	50	—
Fixed Position Box Mounting Brackets w/Cable Support			
NEW 3PRAC	9 Cable Supports	14	—
4PRAC	12 Cable Supports	10	—

APPLICATIONS (3PRAC, 4PRAC)

- Rough-In-Ready® 3PRAC allow two 4" and one 4-11/16" (in center) square boxes to be securely positioned between two studs. 4PRAC brackets allow multiple 4" or 4-11/16" square boxes to be securely positioned between two studs.

PRODUCT FEATURES

- Face mount stud brackets allows bracket/box to directly mount to any type of stud - metal (open or closed sides) or wood
- 3PRAC = supports up to 3, square boxes and mud rings. 4PRAC = supports up to 4, square boxes and mud rings
- Integrated top cable support manages cables entering assembly per current NEC requirements
- Easy to use, integrated locking tabs hold cable securely in place - simply snap cable in, no additional hardware required to hold cables in place
- 3PRAC = 9 built-in cable holders, 4PRAC = 12 built in cable locators
- Cable holders will accept cable ranges from 12-2MC to 10-4 MC
- Stud bracket features centering hole for easy locating of bracket to correct height from center of device to floor
- Unique box locking tab secures box to bracket for transporting to job site. Tab design allows mud ring to be removed from box without disengaging from bracket assembly
- Built-in, flip-out far side supports will accommodate either 2-1/2", 3-1/2", or 3-5/8" steel or wood stud depths. For 5-1/2" or 6" stud depths, simply break out included far side extensions and add to flip-out support with screw
- Heavy 20 gauge .038" gauge pre-galvanized steel construction for secure and rigid support of boxes in wall cavity

COMPLIANCES

- UL LISTED

Covered by patents: US 7,053,300B2 & US 6,996,943B2

SQUARE BOXES

4" SQUARE CONDUIT BOXES

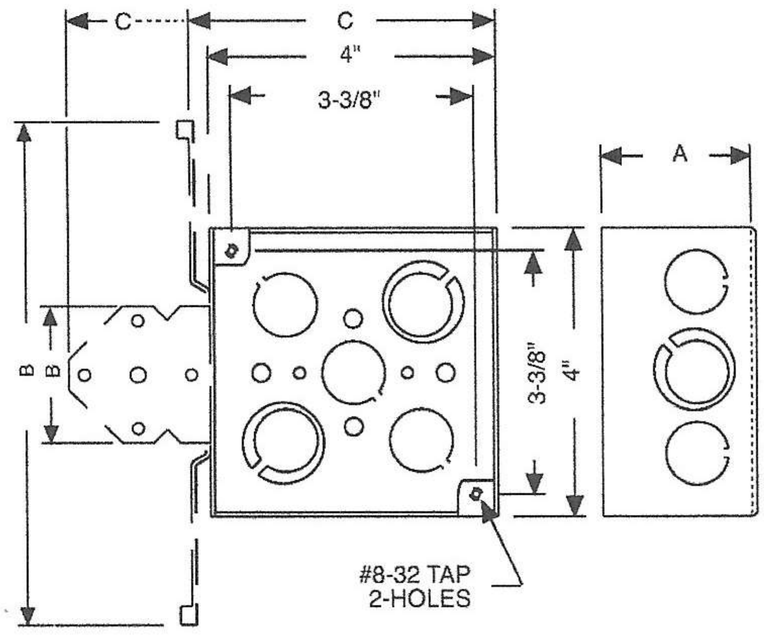

CAT. #	DIMENSIONS		
	A (INSIDE)	B	C
181	1-1/2"	-	-
185	1-1/4"	-	-
187	1-1/2"	-	-
199	1-1/2"	6-7/8"	4-3/8"
202	1-1/2"	-	-
204	1-1/2"	-	-
207	2-1/8"	-	-
226	1-1/2"	-	-
227	1-1/2"	4-5/8"	5-1/2"
236	2-1/8"	7-5/8"	4-3/8"
237	2-1/8"	7-5/8"	4-3/8"
238	2-1/8"	4-5/8"	5-1/2"
239	2-1/8"	-	-
251	2-1/8"	1-31/32"	6"
8197	1-1/2"	7-3/8"	4-3/8"
189, 8189	1-1/2"	-	-
189F	1-1/2"		
189H	1-1/2"	3-1/8"	4-15/16"
189HS	1-1/2"	3-1/8"	4-15/16"
189HWP	1-1/2"	3-1/8"	4-15/16"
189M	1-1/2"	3-1/8"	4-15/16"
189RAC	1-1/2"	-	-
189SM	1-1/2"	-	-
190, 8190	1-1/2"	-	-
191, 8191	1-1/2"	-	-
192, 8192	1-1/2"	-	-
192SM	1-1/2"	-	-
193, 8193	1-1/2"	1-31/32"	6"
196, 8196	1-1/2"	6-7/8"	4-3/8"
201, 8201	1-1/2"	-	-
203, 8203	1-1/2"	-	-
208, 8208	1-1/2"	6-13/16"	5-15/16"
231, 8231	2-1/8"	-	-
232, 8232	2-1/8"	-	-
232F	2-1/8"	-	-
232H	2-1/8"	3-1/8"	4-15/16"
232HS	2-1/8"	3-1/8"	4-15/16"
232HWP	2-1/8"	3-1/8"	4-15/16"
232M	2-1/8"	7"	4-15/16"
232-OW	2-1/8"	-	-
232RAC	2-1/8"	-	-
232SM	2-1/8"	-	-
233, 8233	2-1/8"	-	-
235, 8235	2-1/8"	7"	4-5/16"
911-3	2-1/8"	-	-
911-4	2-1/8"	7-5/8"	4-3/8"
911-6	1-1/2"	-	-
911-9	1-1/2"	-	-

3-3/4" SQUARE CONDUIT BOXES

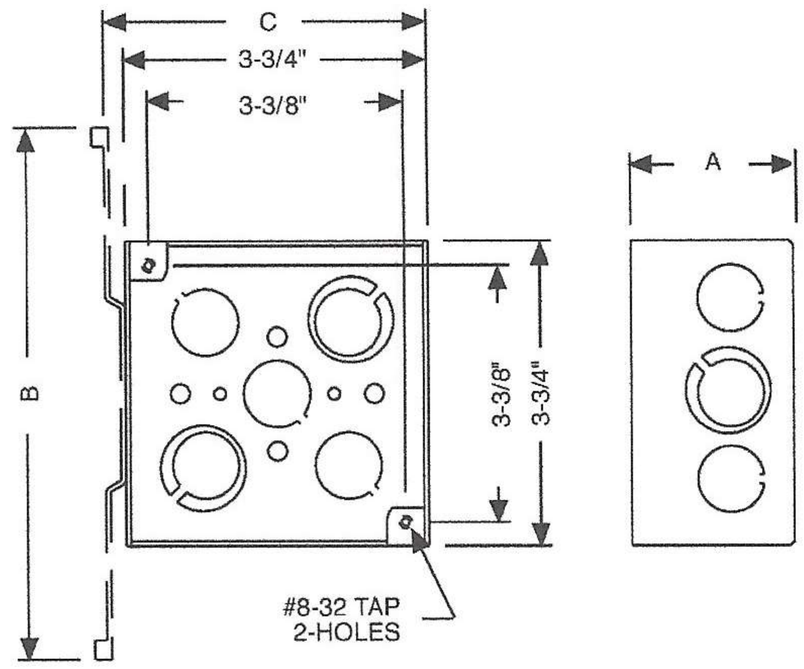

CAT. #	DIMENSIONS		
	A (INSIDE)	B	C
255	3-1/2"	7-5/8"	3-3/4"
911-1	3-1/2"	7-5/8"	3-3/4"
256	3-1/2"	-	-
911-2	3-1/2"	-	-

4" SQUARE CABLE BOXES

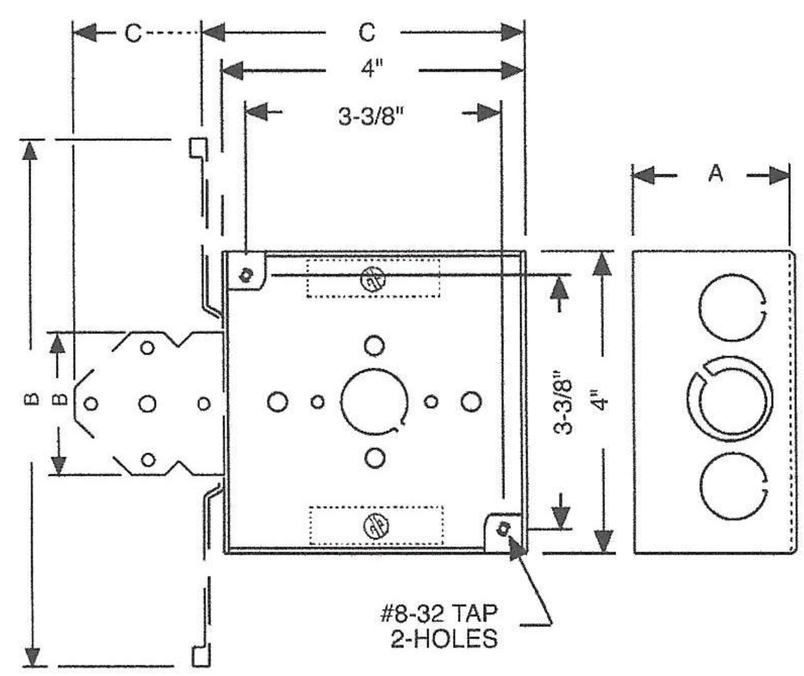

CAT. #	DIMENSIONS		
	A (INSIDE)	B	C
223	1-1/2"	6-7/8"	4-3/8"
224	1-1/2"	1-31/32"	6"
225	1-1/2"	1-31/32"	6"
228	1-1/2"	4-5/8"	5-1/2"
229	1-1/2"	4-5/8"	5-1/2"
242	2-1/8"	-	-
243	2-1/8"	4-5/8"	5-1/2"
248	1-1/2"	-	-
249	2-1/8"	1-31/32"	6"
211, 8211	1-1/2"	-	-
213, 8213	1-1/2"	-	-
213HWP	1-1/2"	3-1/8"	4-15/16"
218, 8218	1-1/2"	6-7/8"	4-3/8"
240, 8240	2-1/8"	7"	4-5/16"
241, 8241	2-1/8"	7"	4-5/16"
248HWP	2-1/8"	3-1/8"	4-15/16"

RECEPTACLE / METAL COVER COMBOS AND COMPLETE KITS

FLIP COVER COMBOS

MD1050S

MG1050S

MD1250S

MG1250S

APPLICATIONS

- Receptacle and metal cover combos for use whenever weatherproof protection is required.

PRODUCT FEATURES

- High quality Hubbell WRTR device included
- Heavy duty die-cast metal construction
- Includes gasket and mounting hardware
- Premium powdercoat finish
- Lockable tab
- Includes receptacle and cover

COMPLIANCES

- UL File E212332
- 2014 NEC® compliant
- NEMA 3R rated

U.S. Patents: D 569,811; 6,420,653

METAL IN-USE COVER COMBOS AND COMPLETE KITS

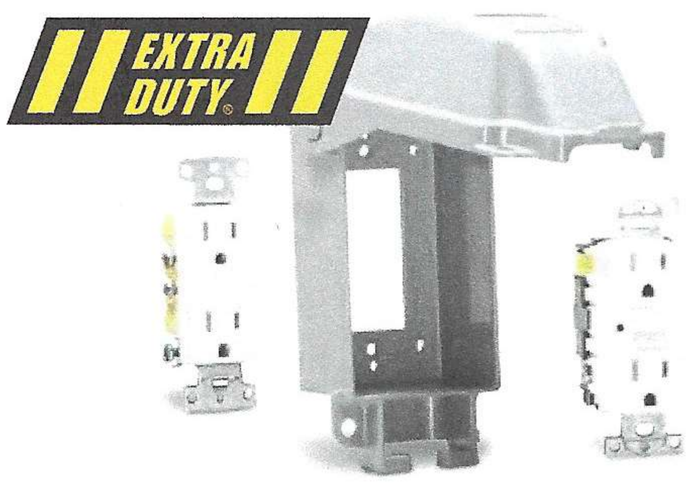

MD5881-0

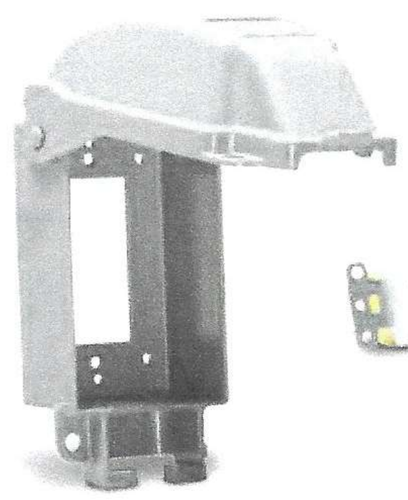

MG5881-0

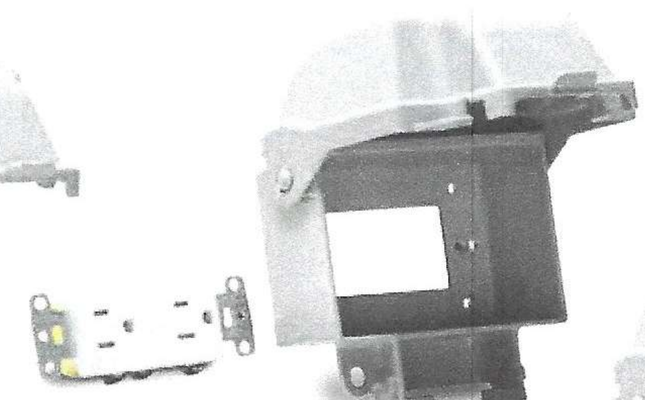

MD5802-0

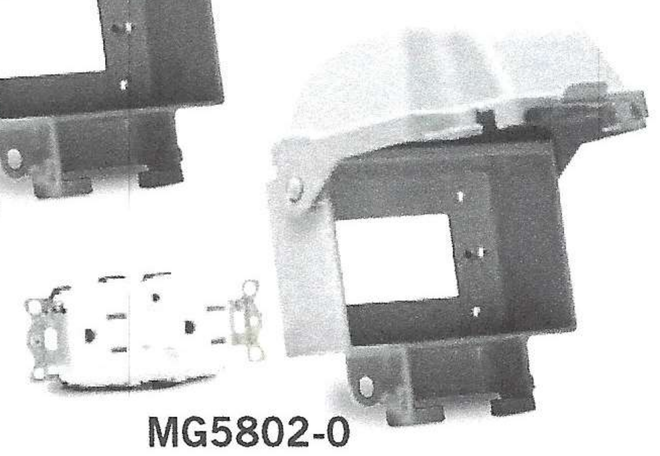

MG5802-0

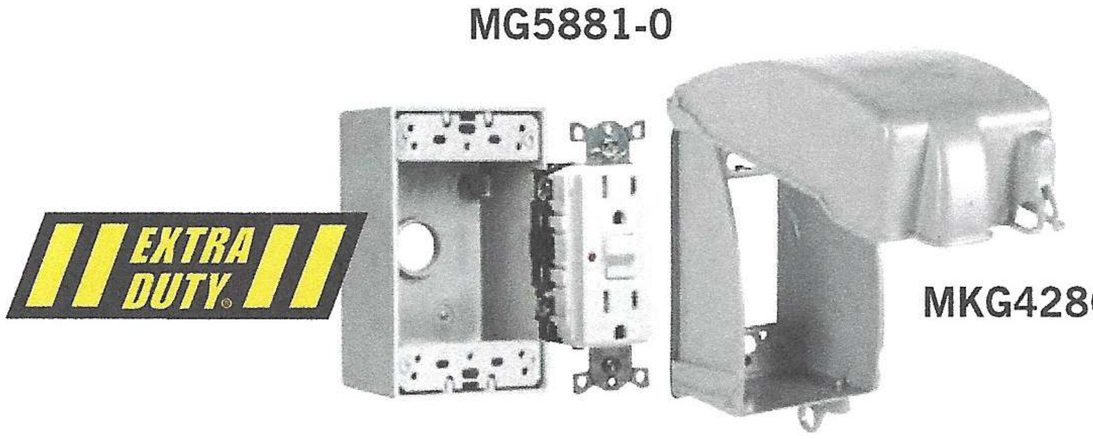

MKG4280S

CATALOG #	DESCRIPTION	DEPTH	COLOR	PKG. TYPE	STD. PKG.	BARCODE
Receptacle / Flip Cover Combos						
MD1050S	Hubbell WRTR 15A Duplex / Vertical/Horizontal Flip Cover Combo		Gray	Shrink	8	IIIIIIII
MG1050S	Hubbell WRTR 15A GFCI / Vertical/Horizontal Flip Cover Combo		Gray	Shrink	8	IIIIIIII
MD1250S	Hubbell WRTR 15A Duplex / Horizontal/Vertical Flip Cover Combo		Gray	Shrink	8	IIIIIIII
MG1250S	Hubbell WRTR 15A GFCI / Horizontal/Vertical Flip Cover Combo		Gray	Shrink	8	IIIIIIII
Receptacle / Metal In-Use Cover Combos						
MD5881-0	Hubbell WRTR 15A Duplex / Vertical In-Use Metal Cover Combo	3"	Gray	Shrink	4	IIIIIIII
MG5881-0	Hubbell WRTR 15A GFCI / Vertical In-Use Metal Cover Combo	3"	Gray	Shrink	4	IIIIIIII
MD5802-0	Hubbell WRTR 15A Duplex / Horizontal In-Use Metal Cover Combo	3"	Gray	Shrink	3	IIIIIIII
MG5802-0	Hubbell WRTR 15A GFCI / Horizontal In-Use Metal Cover Combo	3"	Gray	Shrink	3	IIIIIIII
Complete Metal In-Use Cover Kits						
MKG4280S	In-Use Cover, Box and Hubbell WRTR 15A GFCI Kit	3.5"	Gray	Clamshell	4	IIIIIIII

SEE END OF SECTION (PG C19-C20) FOR DETAILED DRAWINGS »

ROUND CABLE CEILING BOXES WITH CAPTIVE NAILS

NONMETALLIC CABLE BOXES

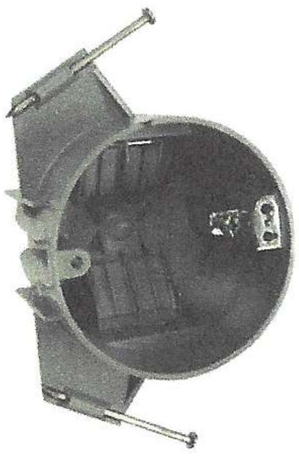

7919RAC

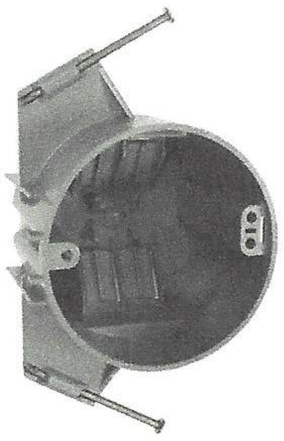

7119RAC

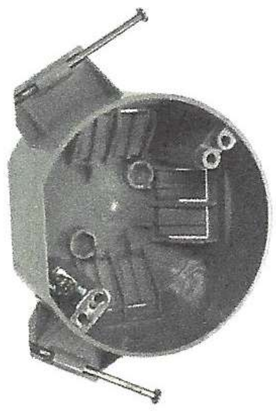

7823RAC

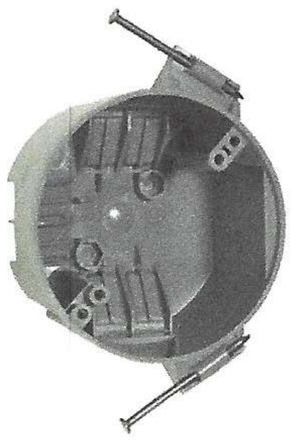

7824RAC

APPLICATIONS

- RACO® Nonmetallic cable boxes are used in branch circuit wiring to splice wires
- Provide excellent protection for wiring system or devices
- For use wherever lighting fixture canopies are to be installed
- Ceiling boxes on this page are not designed for ceiling fan support

PRODUCT FEATURES

- RACO® Nonmetallic cable boxes provide the installer with a cost alternative that is lightweight and easy to install
- Self-clamping wire entry clamps
- Round fixture boxes offer an optional front-mounted grounding screw
- Oversized nail support that resists hammer impact and prevents box deformation

STANDARD MATERIAL

- Made of heavy-duty engineered compound. Base material is polycarbonate

REFERENCE DATA

- Cable clamp U.S. Patent 4,874,905 and 4,605,816; Canada Patent 1,233,900
- Mounting holes U.S. Patent 4,580,689; Canada Patent 1,237,515
- Hex device holes U.S. Patent 4,666,055; Canada Patent 1,260,599

COMPLIANCES

- UL Standard 514C
- Boxes are listed for their Electrical Applications (Electrical Codes), UL Green Book
- Boxes are listed for mechanical properties, including the 2-hour Fire Rating, (building codes) UL Orange Book
- Federal Manufacturer's number 28488

CAT. #	DESCRIPTION AND SETBACK	CABLE CLAMPS	STD. PKG.	UPC BAR CODE	RECOMMENDED MAX. SUPPORT LOADS	
					Ceiling Fan Lbs. (dynamic)	Fixture Lbs. (static)
3-1/2" Round Ceiling Boxes – *With Captive Nails, For Nonmetallic Sheathed Cable*						
7119RAC	2-5/8" Deep, 18.0 Cu. In. (294.9 cm³), 1/2" Setback, Nails	4	75	IIIIIIII	—	50
7919RAC	2-5/8" Deep, 18.0 Cu. In. (294.9 cm³), 1/2" Setback, Nails, Ground Plate,	6	75	IIIIIIII	—	50
4" Round Ceiling Boxes – *With Captive Nails, For Nonmetallic Sheathed Cable*						
7824RAC	2-3/8" Deep, 20.0 Cu. In. (327.7 cm³), 3/8" Setback, Nails	4	75	IIIIIIII	—	50
7823RAC	2-3/8" Deep, 20.0 Cu. In. (327.7 cm³), Ground Plate, 3/8" Setback, Nails	4	75	IIIIIIII	—	50

SEE END OF SECTION (PG A85) FOR DETAILED DRAWINGS »

FS and FD Cast Hub Device Boxes

UNILETS™ for use with Threaded Rigid Conduit and IMC. All device boxes have ridge top construction.

CEC:
Listed for Ordinary Locations

Applications

- Accommodate wiring devices such as switches and receptacles.
- Provide excellent service in areas where boxes are subject to rough usage.
- Serve as pull boxes for conductors.
- Permit access to conductors for maintenance.
- Provide openings for making splices.
- Allow connections for branch conduit runs.
- Blank bodies for special conduit entrance arrangements.

Features

- Corrosion-resistant — ideal for indoor and outdoor installations.
- Weatherproof, raintight and dust-tight when used with cast gasketed covers.
- FS and FD boxes take standard flush wiring devices.
- FD boxes take devices exceeding 1-5/8" in depth under fastening ears.
- Malleable iron for high tensile strength and ductility — provides greater resistance to impact and shock.
- Both malleable iron and aluminum boxes have ridge top construction for positive cover/gasket/box fit.
- Accurately tapped, tapered threads for tight, rigid joints, ground continuity.
- Complete selection of covers, receptacles, plugs, gaskets and accessories.
- Covers have captive stainless steel screws to speed installation, prevent "freezing" of screws.
- Ground screw at top of box for easy access.
- Cast Hub Boxes
  - — Available in single, two, three and four gang and tandem.
  - — Smooth, rounded integral bushing in each hub protects conductor insulation.
- FD Blank Bodies for Brazed Hubs or Drill and Tapped Entries
  - — Available in single, two, three and four gang boxes.
  - — Drill and tapped entries.
  - — Brazed threaded hubs for threaded conduit from 1/2" thru 1-1/2" and brazed union hubs from 1/2" thru 1-1/4.
  - — Smooth, rounded integral bushing in each hub protects conductor insulation.
  - — Ground screw at top of box for easy access.

Standard Materials

- Cast hub device boxes and boxes for drilling and tapping: malleable iron or copperfree (4/10 of 1% max.) aluminum
- Brazed hubs: malleable iron
- Covers: malleable iron, steel, or copperfree (4/10 of 1% max.) aluminum

Standard Finishes

- Malleable iron boxes and covers: triple-coat — (1) zinc electroplate, (2) chromate, and (3) aluminum polymer enamel
- Aluminum boxes and covers: epoxy powder coat
- Steel covers: zinc electroplate
- Screws: stainless steel

Options

- Enclosures drilled for 347 Volt devices. Add suffix **-347**.

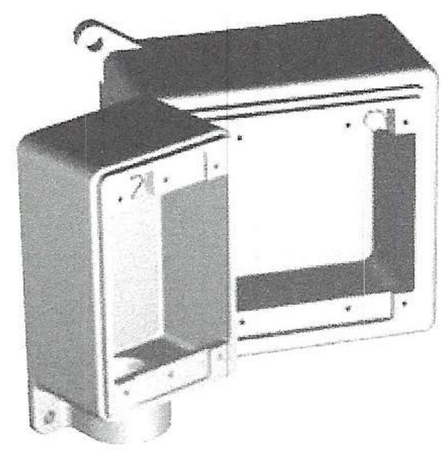

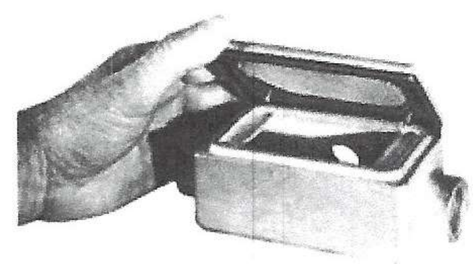

Gasket is designed so that it "wraps around" ridge top of Appleton™ aluminum or malleable iron device box. Result is a positive seal against moisture.

CEC Certifications and Compliances

- CSA Standard: C22.2 No. 18.1
- CSA Certified: 001472

Reference Data

- When ordering drilled and tapped openings or brazed hubs for blank bodies, refer to *FS and FD Cast Device Boxes Drilling and Tapping Information* pages.

Visit our website at **www.emerson.com** or contact us at **(800) 621-1506.**
© October 2018

EMERSON

FS and FD Cast Hub Device Boxes

UNILETS™ for use with Threaded Rigid Conduit and IMC. All device boxes have ridge top construction.

CEC:
Listed for Ordinary Locations

	Size		Malleable Iron Weight kg (lb)	Catalog Number		Aluminum Weight kg (lb)	Catalog Number
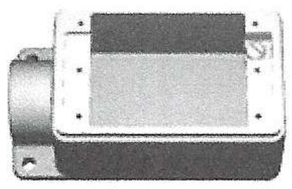	1/2	Shallow	0.88 (1.94)	**FS-1**	Shallow	0.29 (0.64)	**FS-1A**
	3/4		1.02 (2.25)	**FS-2**		0.34 (0.75)	**FS-2A**
	1		0.88 (1.94)	**FS-3**		0.29 (0.64)	**FS-3A**
	1/2	Deep	1.22 (2.70)	**FD-1**	Deep	0.41 (0.90)	**FD-1A**
	3/4		1.18 (2.60)	**FD-2**		0.42 (0.92)	**FD-2A**
	1		1.27 (2.80)	**FD-3**		0.43 (0.94)	**FD-3A**
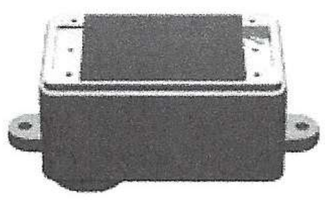	1/2	Shallow	0.77 (1.70)	**FSA-1**	Shallow	0.26 (0.57)	**FSA-1A**
	3/4		0.73 (1.60)	**FSA-2**		0.26 (0.58)	**FSA-2A**
	1/2	Deep	0.95 (2.10)	**FDA-1**	Deep	0.32 (0.70)	**FDA-1A**
	3/4		0.91 (2.00)	**FDA-2**		0.30 (0.67)	**FDA-2A**
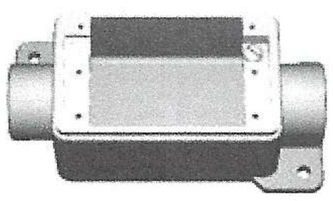	1/2	Shallow	0.95 (2.10)	**FSC-1**	Shallow	0.32 (0.70)	**FSC-1A**
	3/4		1.09 (2.40)	**FSC-2**		0.36 (0.80)	**FSC-2A**
	1		0.93 (2.06)	**FSC-3**		0.32 (0.70)	**FSC-3A**
	1/2	Deep	1.27 (2.80)	**FDC-1**	Deep	0.43 (0.94)	**FDC-1A**
	3/4		1.27 (2.80)	**FDC-2**		0.43 (0.94)	**FDC-2A**
	1		1.36 (3.00)	**FDC-3**		0.45 (1.00)	**FDC-3A**
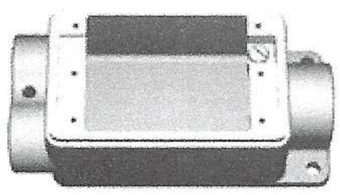	1/2	Shallow	0.77 (1.70)	**FSCC-1**	Shallow	0.26 (0.57)	**FSCC-1A**
	3/4		0.99 (2.20)	**FSCC-21** ①		0.34 (0.74)	**FSCC-21A** ①
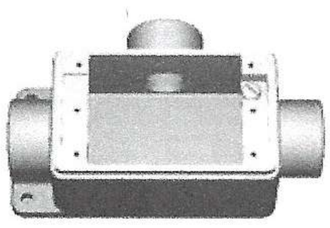	1/2	Shallow	1.13 (2.50)	**FSCT-1**	Shallow	0.38 (0.84)	**FSCT-1A**
	3/4		1.13 (2.50)	**FSCT-2**		0.38 (0.84)	**FSCT-2A**
	1		1.02 (2.25)	**FSCT-3**		0.34 (0.75)	**FSCT-3A**
	1/2	Deep	1.36 (3.00)	**FDCT-1**	Deep	0.45 (1.00)	**FDCT-1A**
	3/4		1.27 (2.80)	**FDCT-2**		0.43 (0.94)	**FDCT-2A**
	1		1.41 (3.10)	**FDCT-3**		0.47 (1.03)	**FDCT-3A**
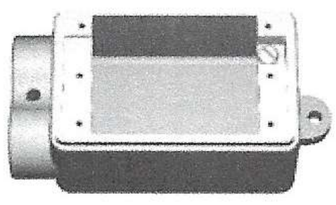	1/2	Deep	0.99 (2.20)	**FDD-1**	Deep	0.34 (0.74)	**FDD-1A**
	3/4		1.04 (2.30)	**FDD-2**		0.35 (0.77)	**FDD-2A**
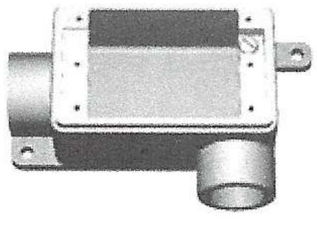	3/4	Shallow	1.06 (2.34)	**FSL-2**	Shallow	0.35 (0.78)	**FSL-2A**

① Use FD Unilets™ for wiring devices exceeding 1-5/8" in depth under fastening ears.

© October 2018

FS and FD Cast Hub Device Boxes

UNILETS™ for use with Threaded Rigid Conduit and IMC. All device boxes have ridge top construction.

CEC:
Listed for Ordinary Locations

	Size		Malleable Iron Weight kg (lb)	Catalog Number		Aluminum Weight kg (lb)	Catalog Number
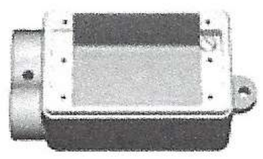	1/2	Shallow	0.82 (1.80)	**FSS-1**	Shallow	0.27 (0.60)	**FSS-1A**
	3/4		0.82 (1.80)	**FSS-2**		0.27 (0.60)	**FSS-2A**
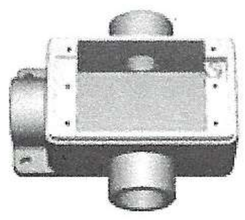	1/2	Shallow	1.12 (2.46)	**FST-1**	Shallow	0.37 (0.82)	**FST-1A**
	3/4		1.06 (2.33)	**FST-2**		0.35 (0.78)	**FST-2A**
	1	Deep	1.45 (3.20)	**FDT-3**	Deep	0.49 (1.07)	**FDT-3A**
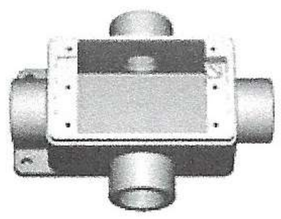	1/2	Shallow	1.25 (2.75)	**FSX-1**	Shallow	0.41 (0.91)	**FSX-1A**
	3/4		1.06 (2.34)	**FSX-2**		0.35 (0.78)	**FSX-2A**
	1/2	Deep	1.41 (3.10)	**FDX-1**	Deep	0.47 (1.03)	**FDX-1A**
	3/4		1.36 (3.00)	**FDX-2**		0.48 (1.06)	**FDX-2A**
	1		1.59 (3.50)	**FDX-3**		0.53 (1.17)	**FDX-3A**

Dimensions in Millimeters (Inches)

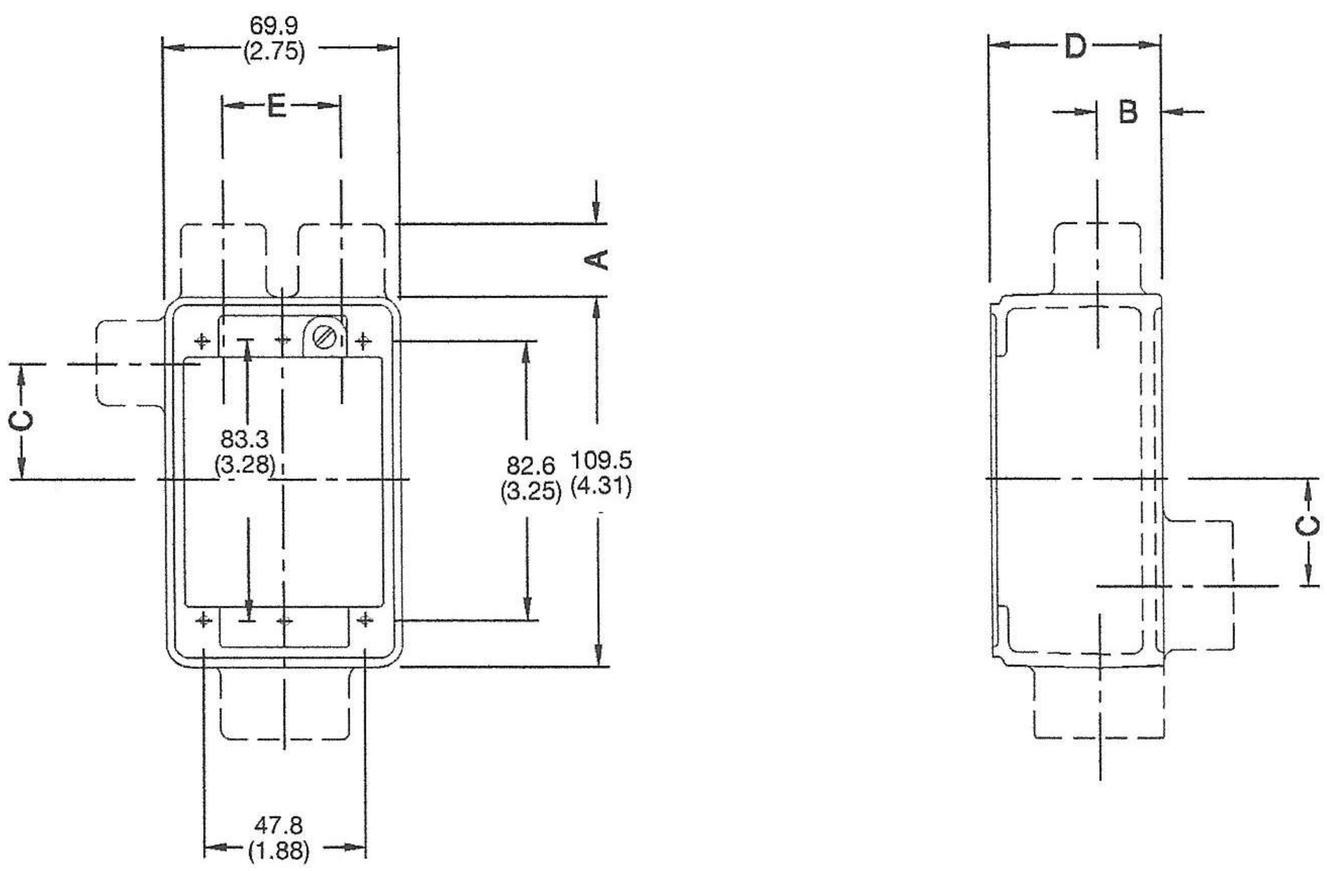

FS and FD Single Gang Devices

Hub Size	A	B	C	D FS	D FD	E
1/2	0.3 (0.75)	0.3 (0.63)	0.6 (1.38)	0.9 (2.00)	1.3 (2.75)	0.6 (1.38)
3/4	0.3 (0.75)	0.3 (0.75)	0.6 (1.38)	0.9 (2.00)	1.3 (2.75)	0.6 (1.38)
1	0.4 (0.88)	0.4 (0.88)	0.8 (1.25)	0.9 (2.00)	1.3 (2.75)	0.6 (1.38)

Visit our website at **www.emerson.com** or contact us at **(800) 621-1506.**
© October 2018

EMERSON

FS and FD Cast Hub Device Boxes

UNILETS™ for use with Threaded Rigid Conduit and IMC.

CEC:
Listed for Ordinary Locations

	Description	Weight Per 100 kg (lb)	Catalog Number
Single Gang Covers — Furnished with stainless steel screws less gasket			
	Blank Cover, Steel — Zinc Electroplate	5.44 (12.00)	**FS-4** ①
	Round Receptacle Cover, Steel — Zinc Electroplate Hole dia. 1-7/16"	5.44 (12.00)	**FS-5** ①
	Duplex Receptacle Cover, Steel — Zinc Electroplate	4.54 (10.00)	**FS-6** ①
	Round Receptacle Cover, Steel — Zinc Electroplate Hole dia. 1-5/8"	5.44 (12.00)	**FS-8** ①
	Tumbler Switch Cover, Steel — Zinc Electroplate	5.44 (12.00)	**FS-9** ①
	Tumbler Switch Cover, Steel — Zinc Electroplate	9.98 (22.00)	**FSK-1TS-G** ②
	For pilot lamp		
	Red Jewel	11.34 (25.00)	**FSK-1J** ②
	Amber Jewel		**FSK-1JA** ②
	Green Jewel		**FSK-1JG** ②
	Opal Jewel		**FSK-1JO** ②

① *Available in Aluminum: Add suffix* ***-A*** *to Catalog Number.*
② *Also for use with multiple gang Unilets with individual cover openings.*

© October 2018

FS and FD Cast Hub Device Boxes

UNILETS™ for use with Threaded Rigid Conduit and IMC.

NEC/CEC:
Listed for Ordinary Locations

	Description	Catalog Number Malleable Iron Ridge Top	Catalog Number Aluminum Ridge Top
Cast Covers NEMA 3 — Weatherproof — Furnished with gasket and stainless steel screws			
	Receptacle cover with spring cover. Hole Diameter — 1-7/16"	**FSK-1VR**	—
	Rocker type for square handle tumbler or toggle switches	**FSK-1V**	**FSK-1V-A**
	For duplex flush receptacle with spring cover	**FSK-1VDR**	**FSK-1VDR-A**
	For external operation of tumbler switches with square handles	**FSK-1VTS**	**FSK-1VTSA**
	Operating type for square handle tumbler or toggle switches	**FSK-1VS**	**FSK-1VS-A**
	Blank Cover and Gasket, Malleable Iron, Zinc Electroplate	—	**FS-100G**
Gasket — Replacement			
	Neoprene – for use with weatherproof covers	**FS-GKR-1N**	**FS-GKR-1N**
Cast Covers Dry Locations — Furnished with stainless steel screws less gasket			
	For standard 2 or 3 wire duplex receptacles	**FSK-1DR-C**	—
	For round flush receptacles.Hole dia. 1-7/16"	**FSK-1R-Z**	—
	For square handle toggle switches	**FSK-1TS-C**	—
	For square handle toggle switches (with protecting guard)	**FSK-1TSG-C**	**FSK-1TSG-CA**

© October 2018

FS and FD Cast Hub Device Boxes

UNILETS™ for use with Threaded Rigid Conduit and IMC. All device boxes have ridge top construction.

CEC:
Listed for Ordinary Locations

	Size		Gray Iron Weight kg (lb)	Catalog Number		Aluminum Weight kg (lb)	Catalog Number
	1/2	Shallow	1.22 (2.70)	**FS-12**	Shallow	0.41 (0.90)	**FS-12A**
	3/4		1.18 (2.60)	**FS-22**		0.39 (0.87)	**FS-22A**
	1/2	Deep	1.22 (2.70)	**FD-12**	Shallow	0.41 (0.90)	**FD-12A**
	3/4		1.22 (2.70)	**FD-22**		0.41 (0.90)	**FD-22A**
	1		1.27 (2.80)	**FD-32**	Deep	0.42 (0.93)	**FD-32A**
	1/2	Shallow	1.36 (3.00)	**FSC-12**	Shallow	0.45 (1.00)	**FSC-12A**
	3/4		1.36 (3.00)	**FSC-22**		0.45 (1.00)	**FSC-22A**
	1/2	Deep	1.32 (2.90)	**FDC-12**	Deep	0.44 (0.97)	**FDC-12A**
	3/4		1.36 (3.00)	**FDC-22**		0.48 (1.06)	**FDC-22A**
	1		1.41 (3.10)	**FDC-32**		0.47 (1.03)	**FDC-32A**
	1/2 - 3/4	Shallow	1.22 (2.70)	**FSD-212** ①	Shallow	0.41 (0.90)	**FSD-212A** ①

Dimensions in Millimeters (Inches)

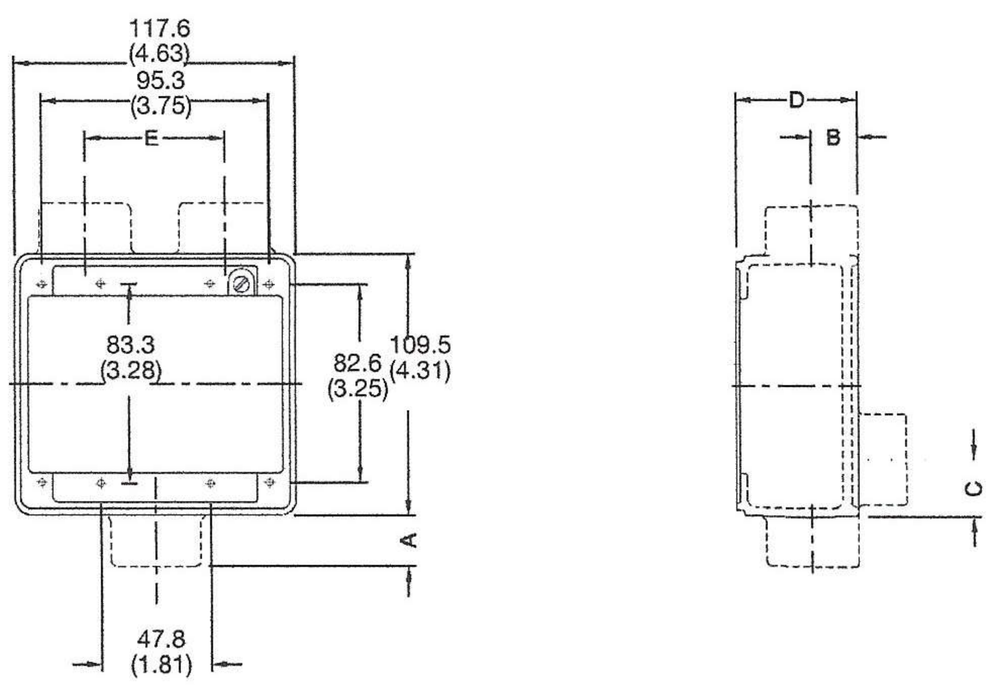

FS and FD Two–Gang Devices

	Dimensions in Millimeters (Inches)					
				D		
Hub Size	A	B	C	FS	FD	E
1/2	19.1 (0.75)	16.0 (0.63)	35.1 (1.38)	50.8 (2.00)	69.9 (2.75)	58.7 (2.31)
3/4	19.1 (0.75)	19.1 (0.75)	35.1 (1.38)	50.8 (2.00)	69.9 (2.75)	58.7 (2.31)
1	22.4 (0.88)	22.4 (0.88)	31.8 (1.25)	50.8 (2.00)	69.9 (2.75)	58.7 (2.31)

① *Hubs at top of illustration are 1/2".*

Visit our website at **www.emerson.com** or contact us at **(800) 621-1506**.
© October 2018

EMERSON

FS and FD Cast Hub Device Boxes

UNILETS™ for use with Threaded Rigid Conduit and IMC.

CEC:
Listed for Ordinary Locations

	Description	Weight Per 100 kg (lb)	Catalog Number
Two Gang Covers			
	Blank Cover, Steel – Zinc Electroplate	9.07 (20.00)	**FS-42** ①
	Round Receptacle Cover, Steel – Zinc Electroplate Hole dia. 1-7/16"	8.16 (18.00)	**FS-52** ①
	Duplex Receptacle Cover, Steel-Zinc Electroplate	6.80 (15.00)	**FS-62** ①
	Tumbler Switch Cover, Steel –Zinc Electroplate	9.07 (20.00)	**FS-92** ①
	Combination Duplex Receptacle and Tumbler Switch Cover, Steel - Zinc Electroplate	6.80 (15.00)	**FS-69** ①
	Combination Duplex Receptacle and Single Receptacle, Steel - Zinc Electroplate	6.80 (15.00)	**FS-65** ①
Weatherproof Covers			
	Blank Cover, Gray Iron	25.40 (56.00)	**FS-200G** ①
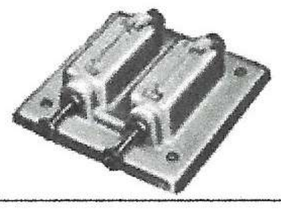	For external operation of tumbler switches with square handles	113.40 (250.00)	**FSK-2VTS**
Gasket — Replacement			
	Neoprene - for use with 2-gang cast covers above	—	**FS-GKR-2N**

① *Available in Aluminum: Add suffix **-A** to catalog number.*

© October 2018