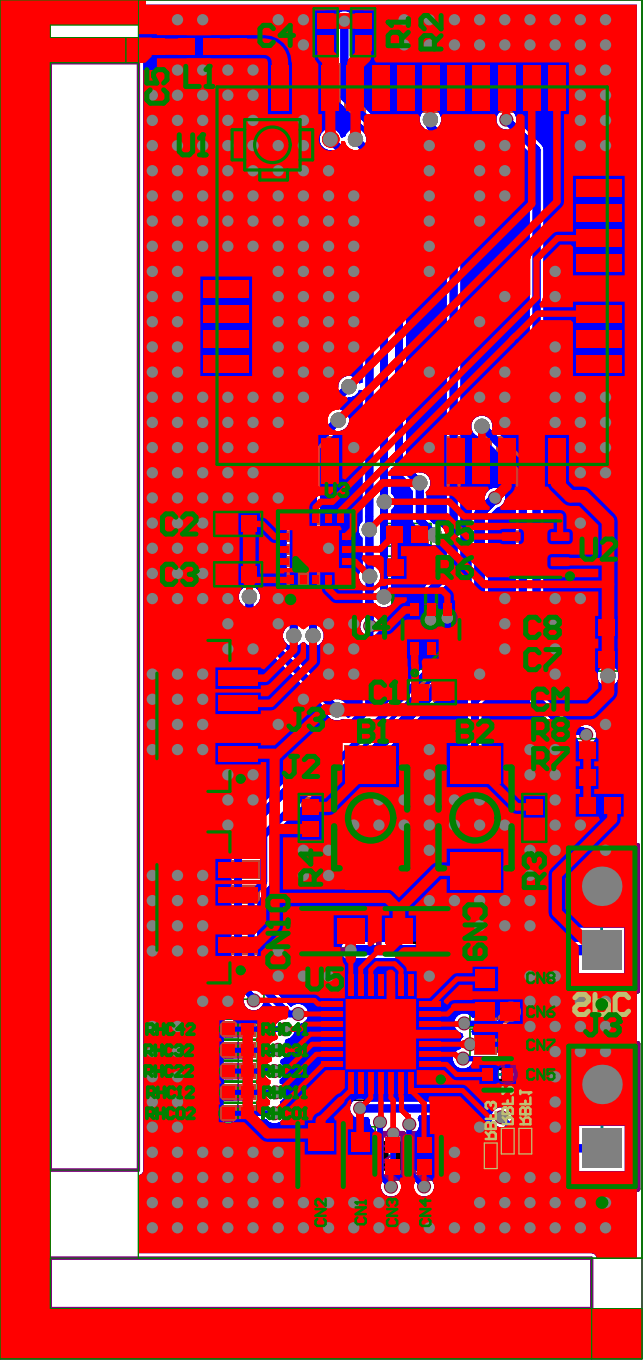
C4
R1
R2
C11
U1
U3
C2
C3
R5
R6
U2
U4
C8
C7
C1
C6
J3
B1
B2
R8
R7
J2
R4
R3
GND3
GND2
U5
CN8
CN6
CN7
CN5
J1
RHC42
RHC32
RHC22
RHC12
RHC02
RHC41
RHC31
RHC21
RHC11
RHC01
RBC3
RBC2
RBC1
RBC0
GND2
GND3
GND4
GND1

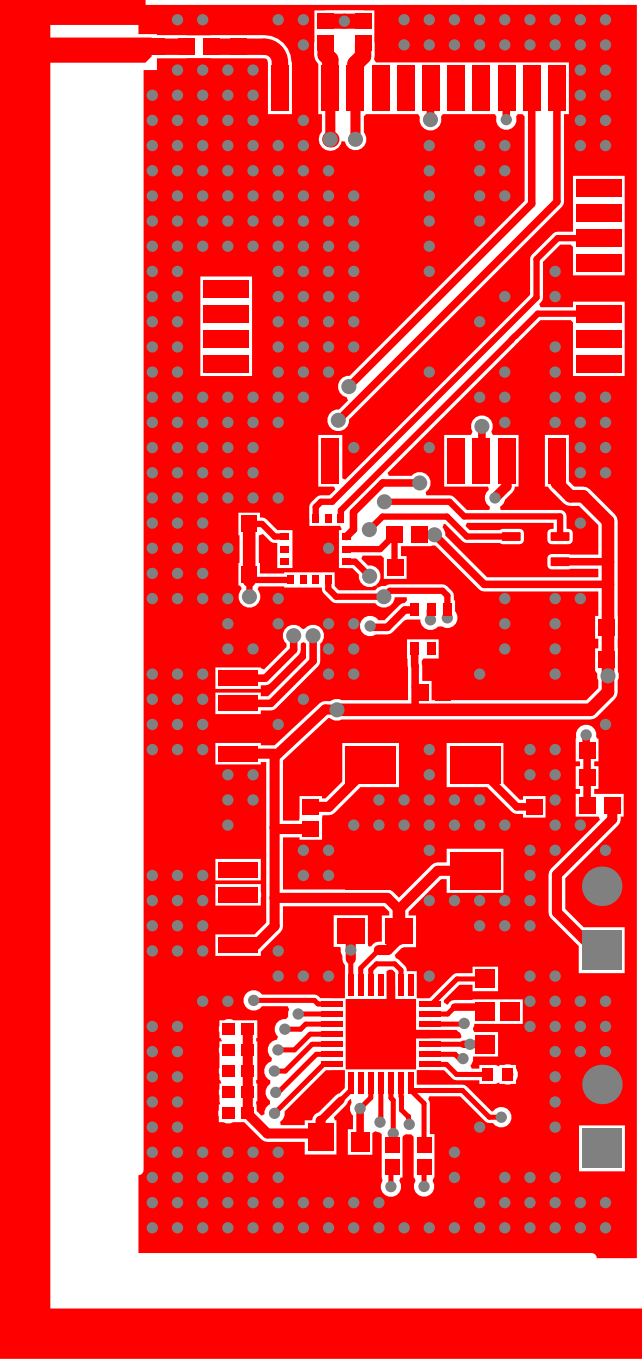

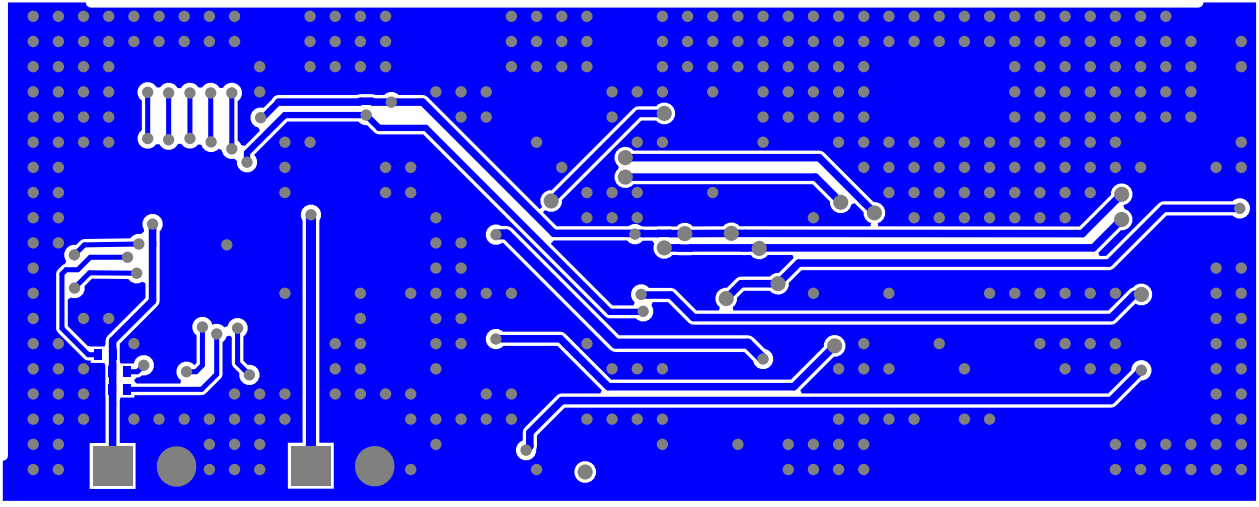

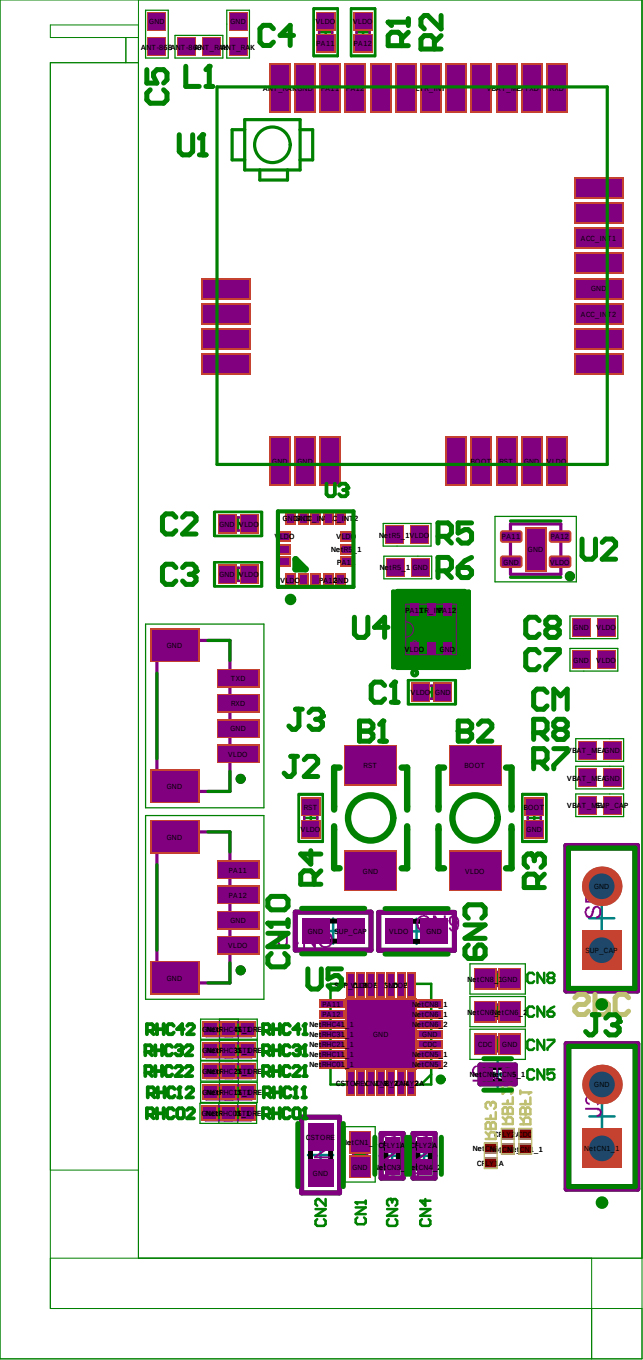
C4
R1
R2
C5
L1
U1
U3
C2
C3
R5
R6
U2
U4
C8
C7
C1
CM
R8
R7
J3
B1
B2
J2
R4
R3
CN10
CN9
U5
CN8
CN6
CN7
CN5
J3
RHC42
RHC32
RHC22
RHC12
RHC02
RHC41
RHC31
RHC21
RHC11
RHC01
CN2
CN1
CN3
CN4