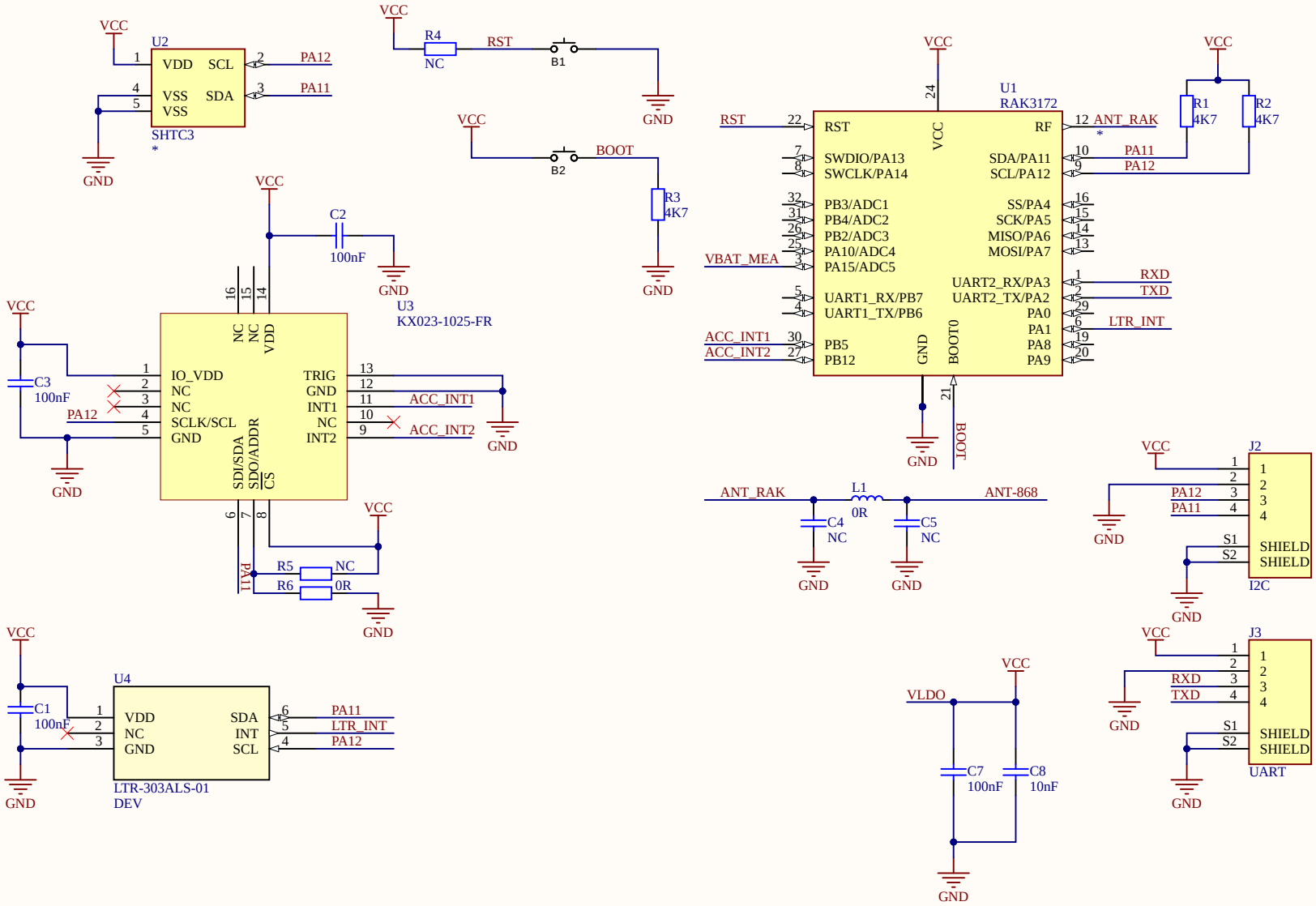

Title	RAK3172_Harvesting	
Size A	Number	Revision
Date: 4/28/2026	Sheet of 1	
File: D:\Phan_Thanh_Tuan\..\RAK3172_SensorBoard.PcbDoc	Drawn By: TuanPT	

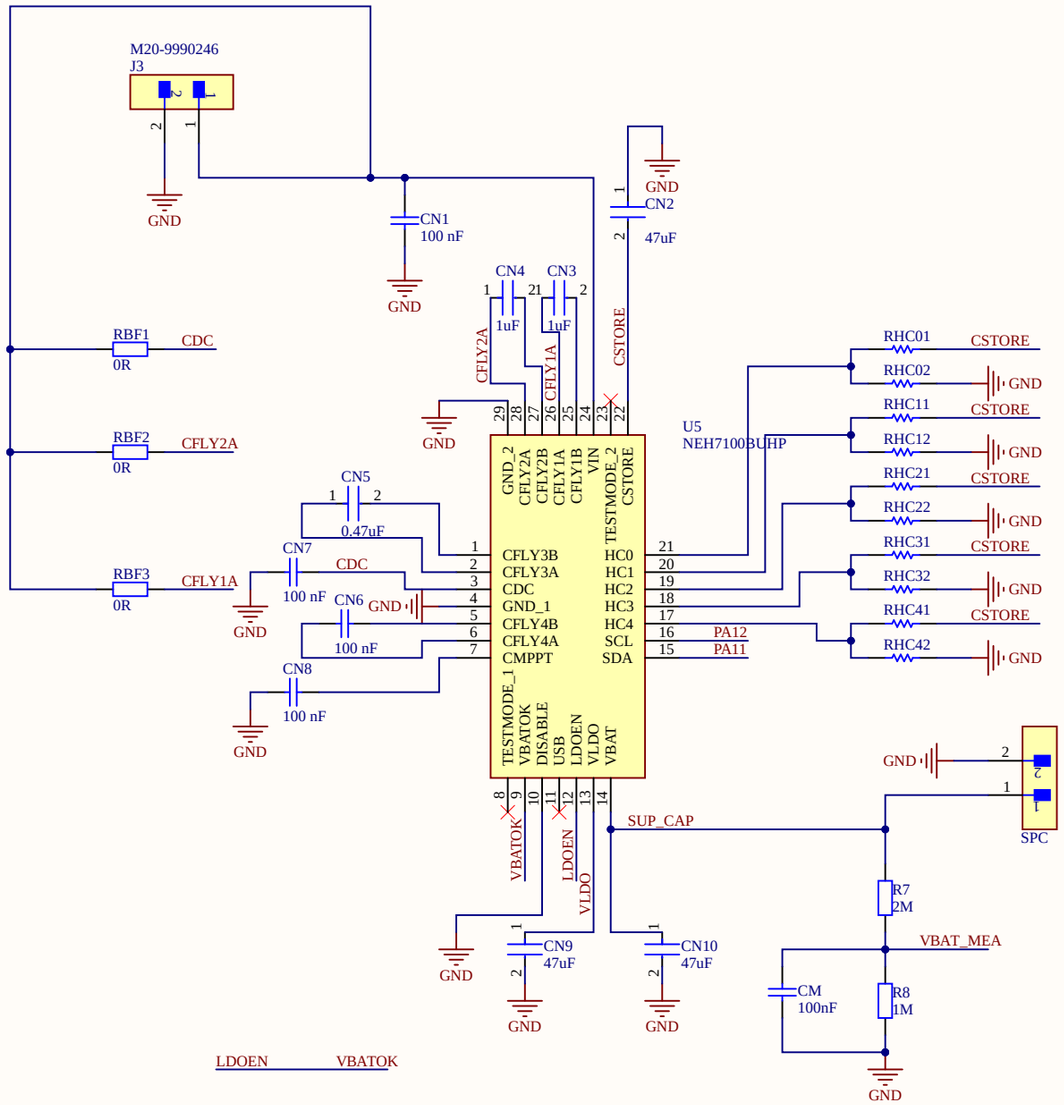

Title		
NEH7100 TETS BOARD		
Size B	Number	Revision
Date: 4/28/2026	Sheet of	
File: D:\Phan_Thanh_Tuan\..\NEH7100.SchDoc	Drawn By:	