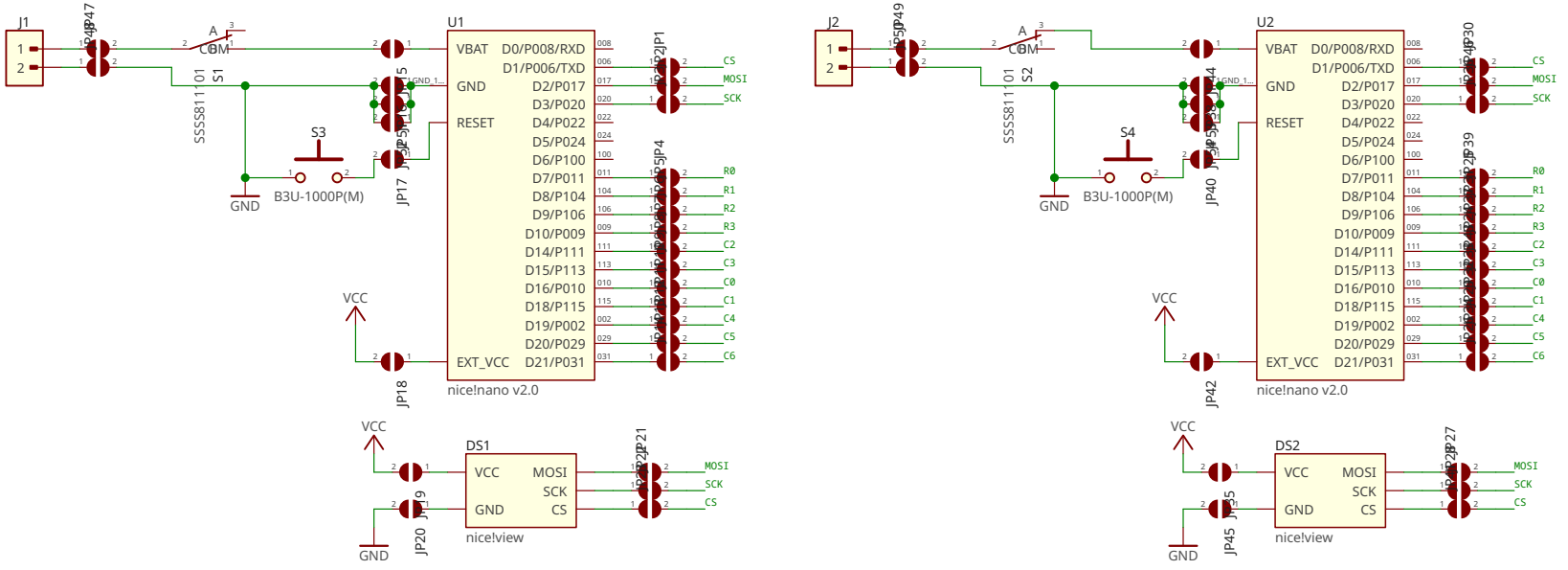

Made With LibrePCB

Made With LibrePCB

Main		2026-07-23
		Tubbles
kbdkid4	v1	Page 1 of 2

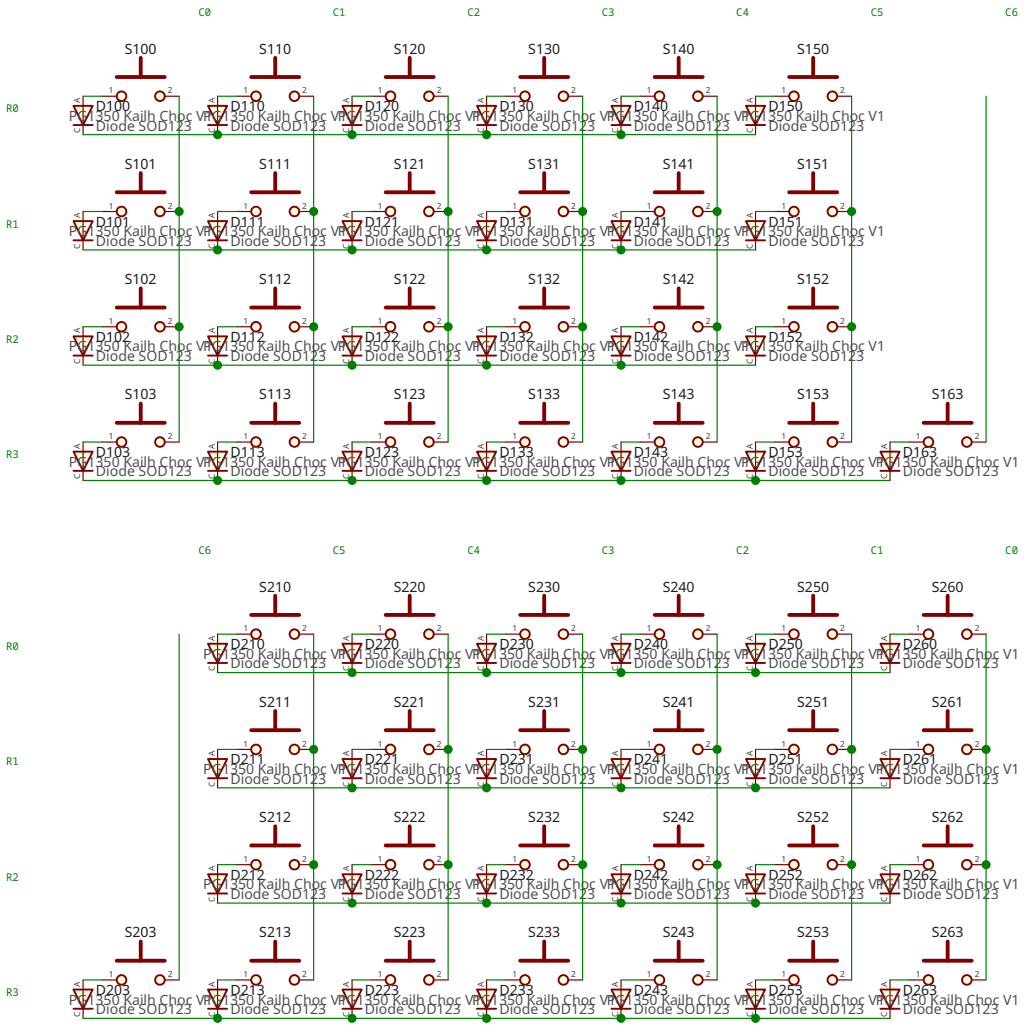

Matrix		2026-07-23
		Tubbles
kbdkid4	v1	Page 2 of 2