CHANGE	MARKS	REF NO	DESCRIPTION	SGN	APP
	1				
	2				
	3				
	4				
	5				

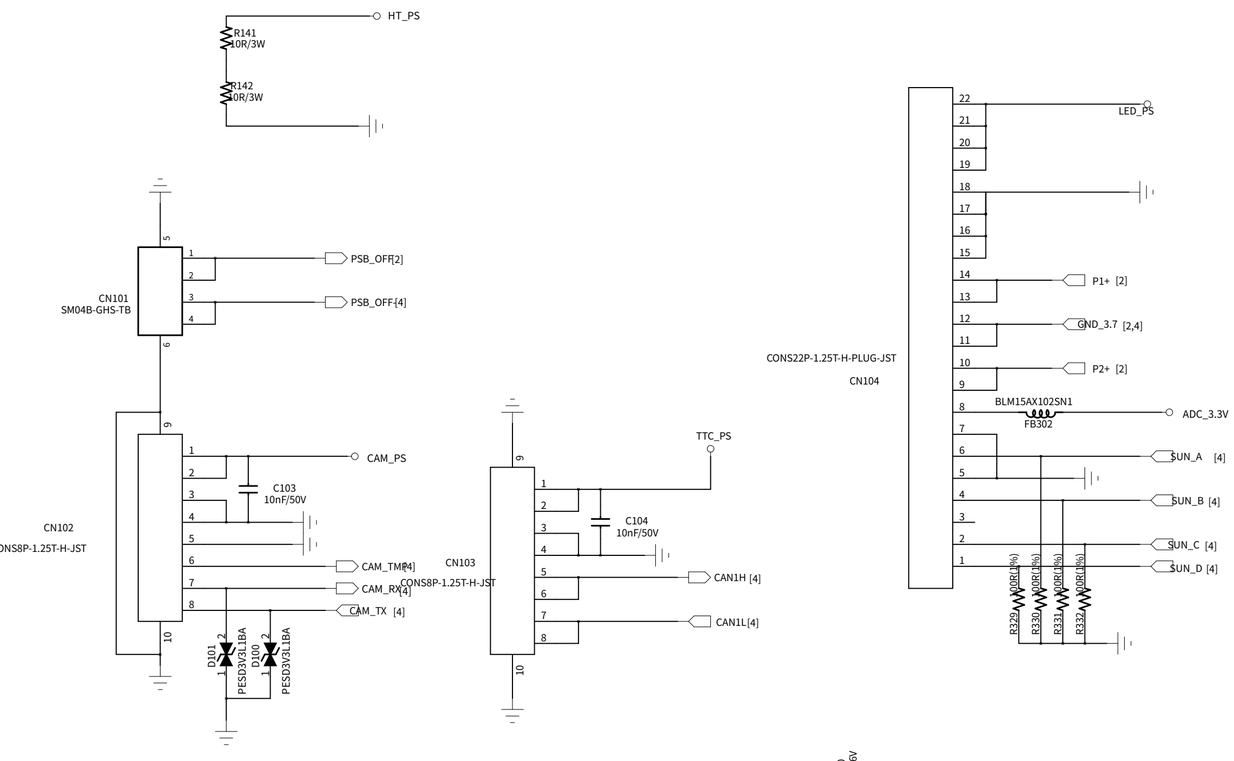

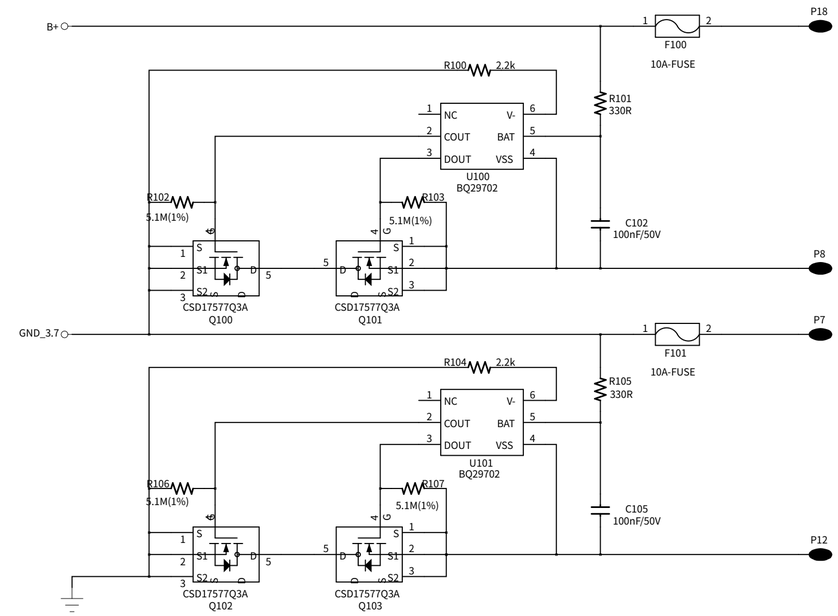

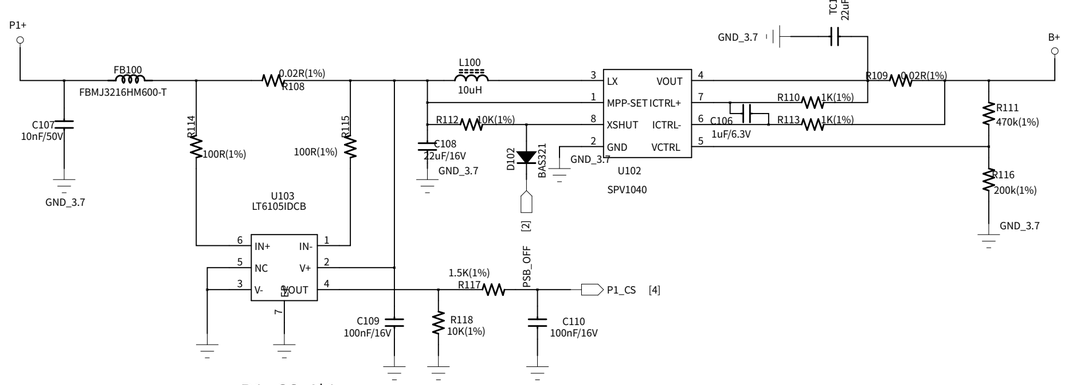

P1_CS=I*1

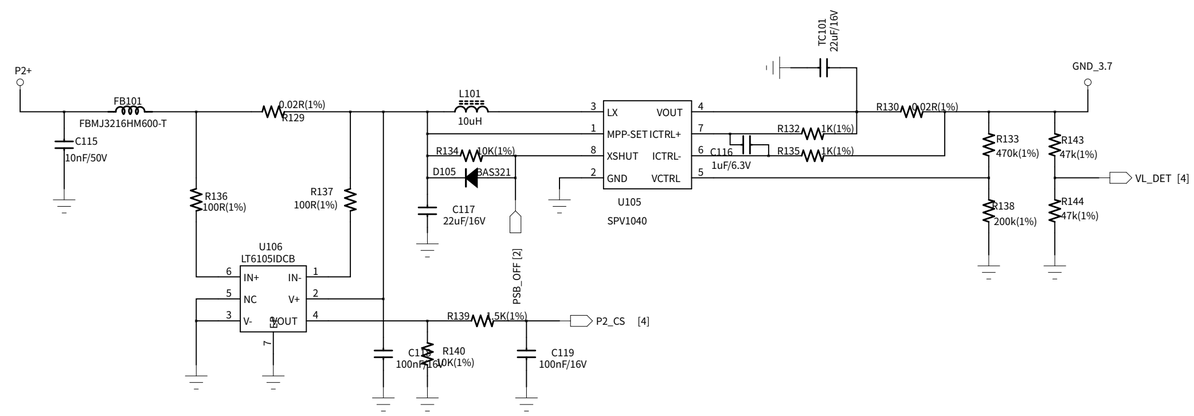

P2_CS=I*1

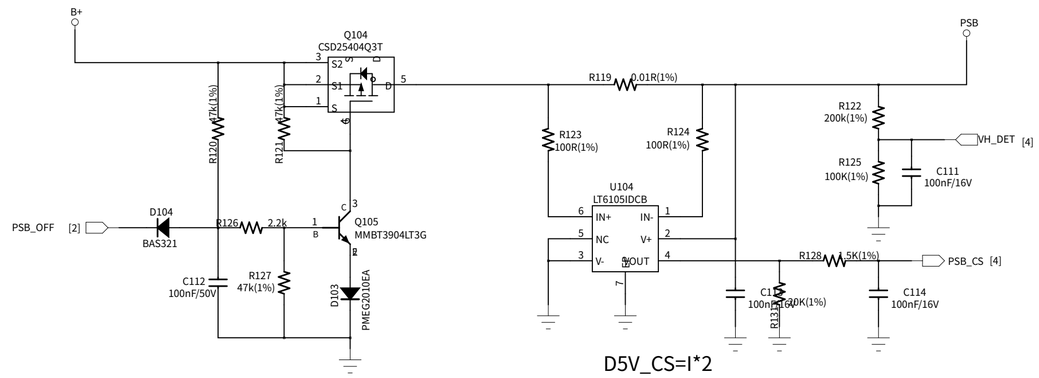

D5V_CS=I*2

MODEL NO			
DESCRIPTION	SHEET: 0/1	SCH REVISION:V00	
TITLE	DRAWN BY	CHECKED BY	TECHNICS BY APPROVED BY
CODE NO			

CHANGE	MARKS	REF NO	DESCRIPTION	SGN	APP
	1				
	2				
	3				
	4				
	5				

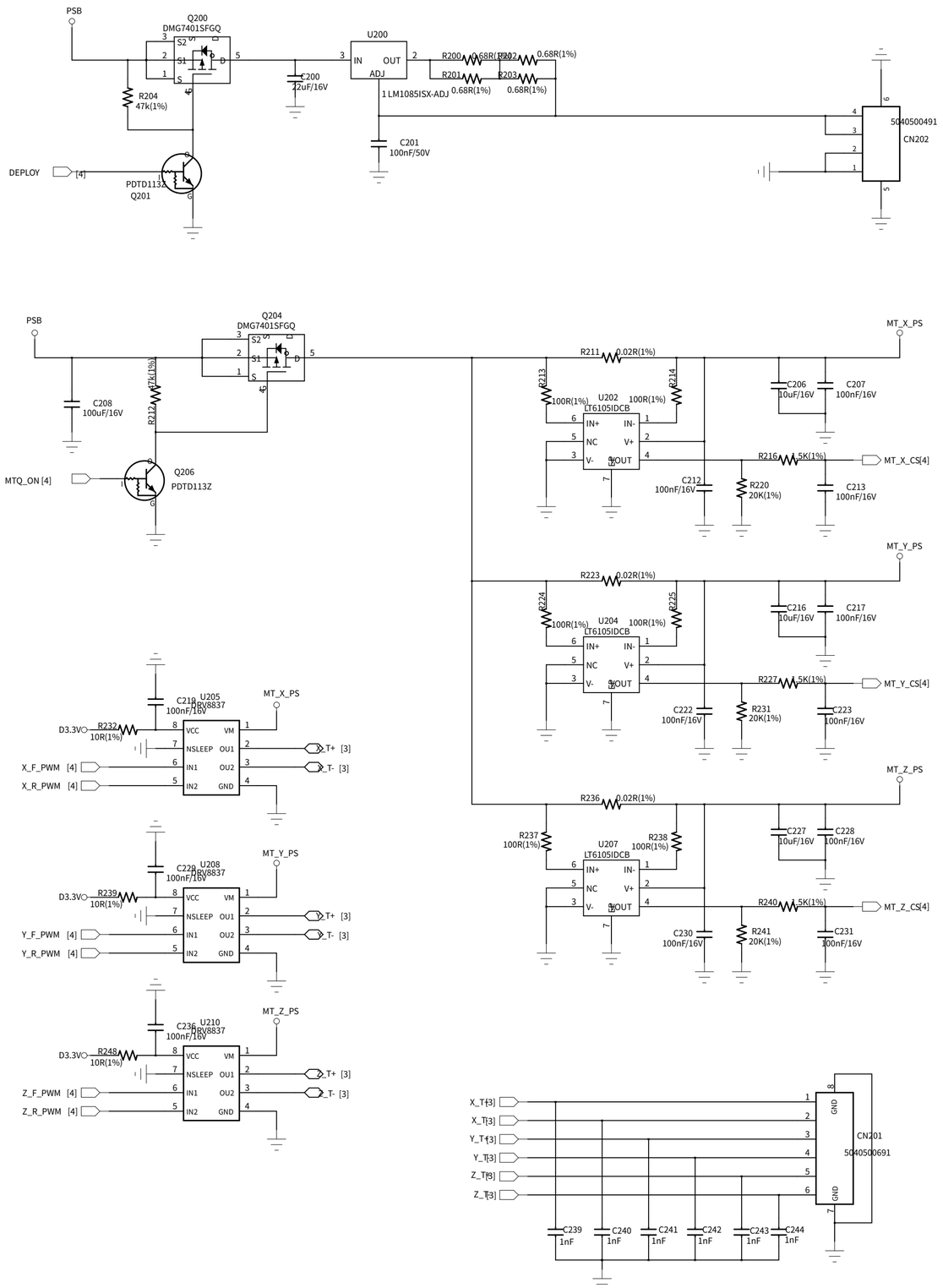

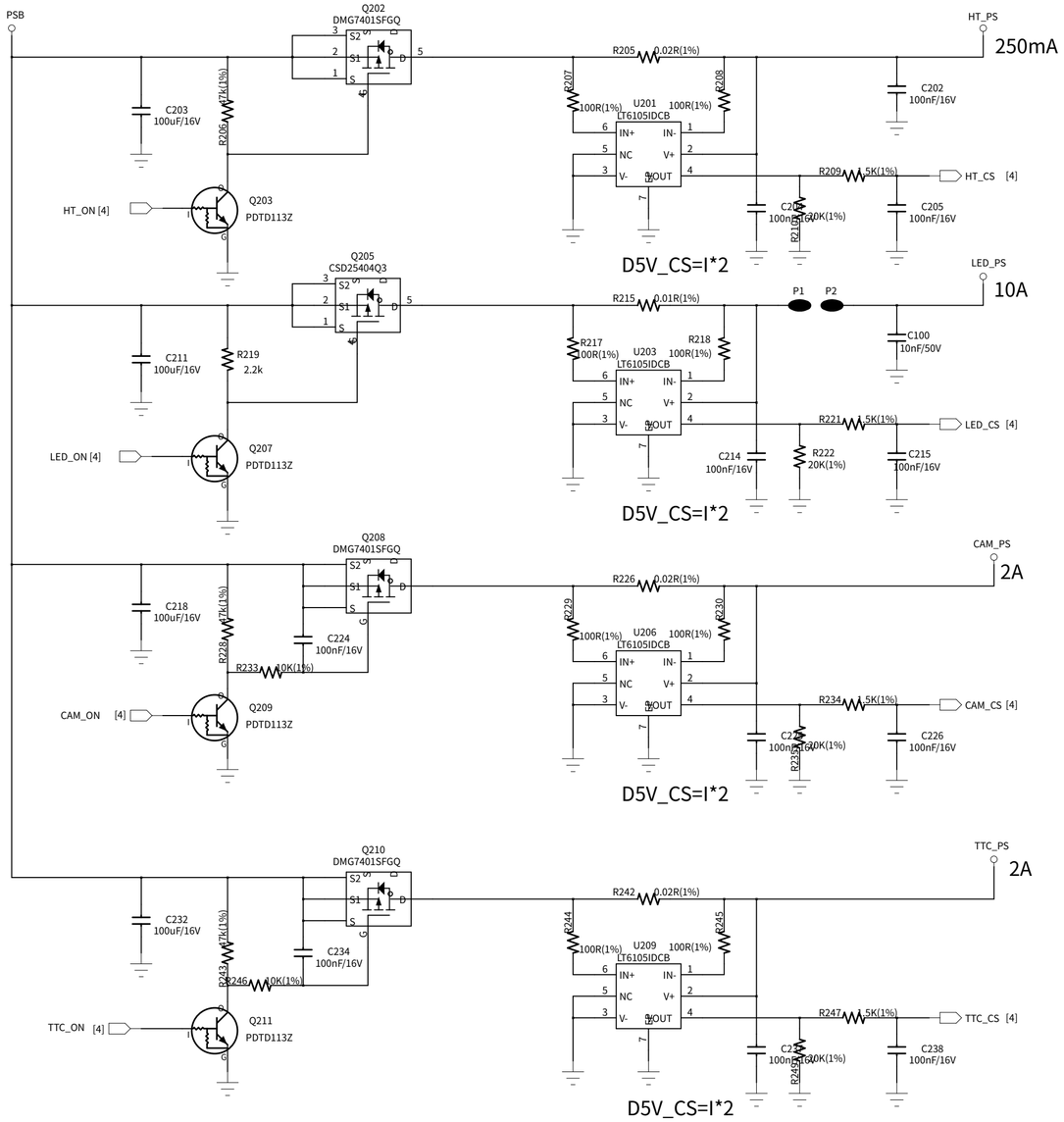

MODEL NO				
DESCRIPTION	SHEET: 0/1	SCH REVISION:V00		
TITLE	DRAWN BY	CHECKED BY	TECHNICS BY	APPROVED BY
CODE NO				

CHANGE	MARKS	REF NO	DESCRIPTION	SGN	APP
	1				
	2				
	3				
	4				
	5				

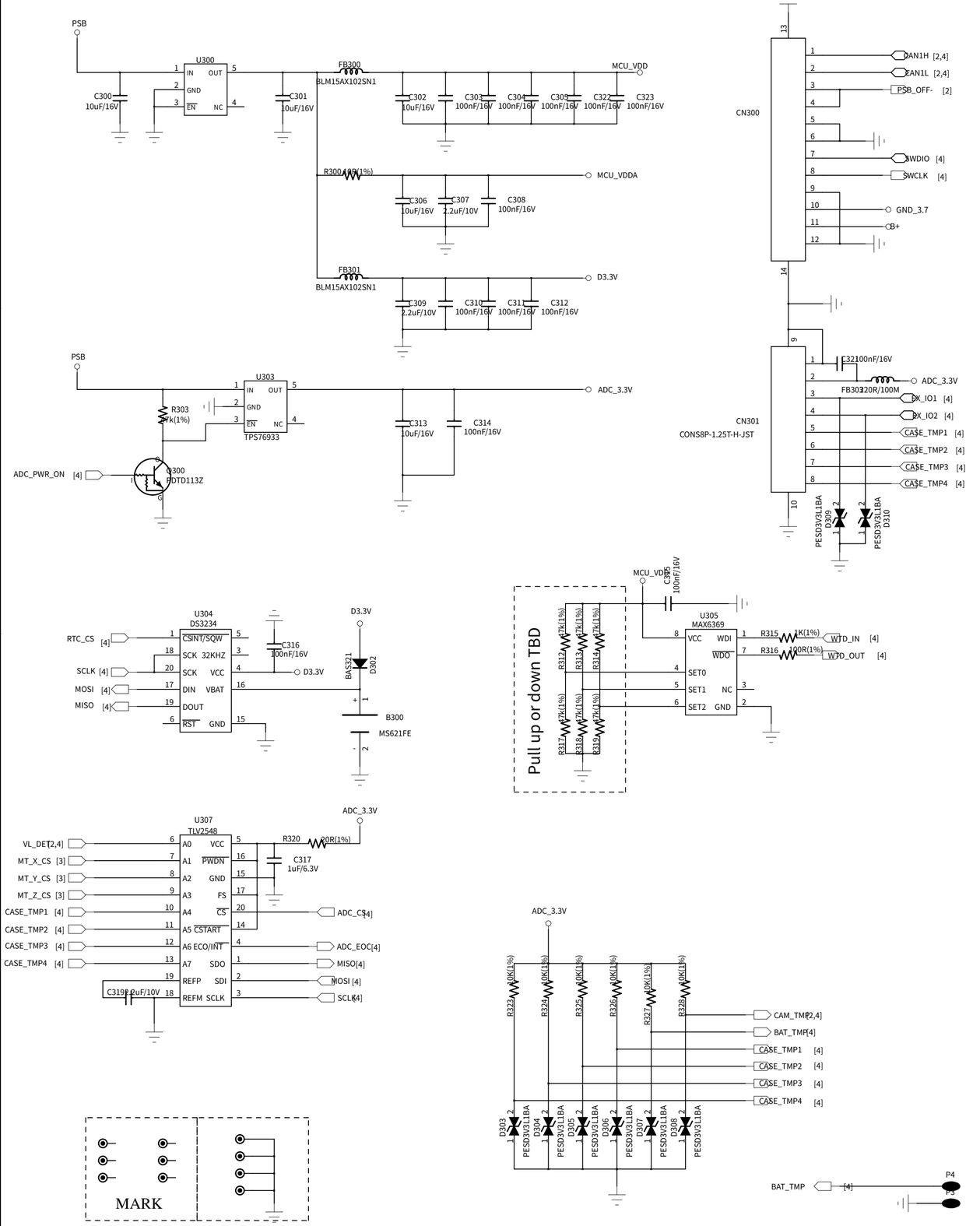

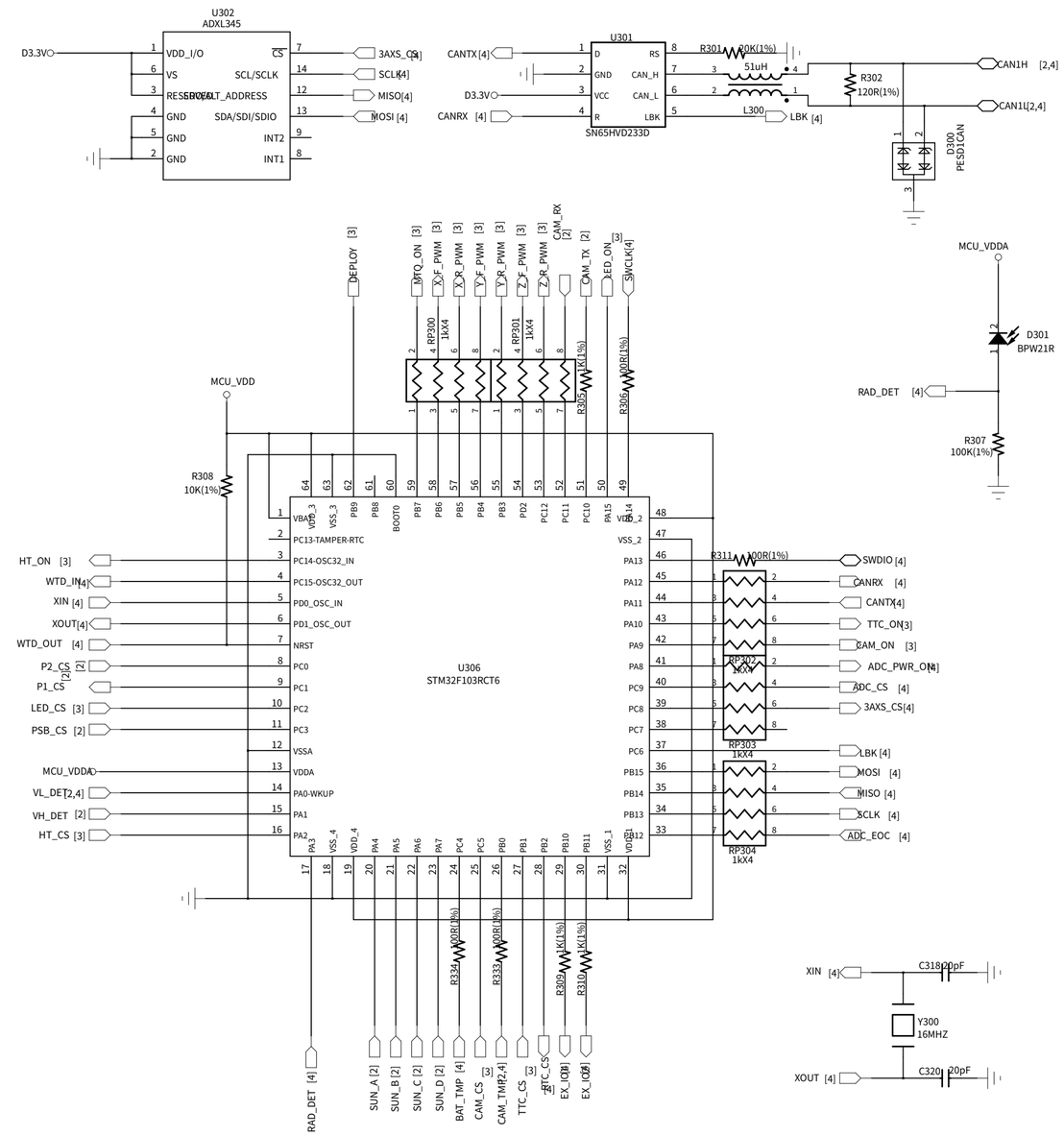

MODEL NO			
DESCRIPTION	SHEET: 0/1	SCH REVISION:V00	
TITLE	DRAWN BY	CHECKED BY	TECHNICS BY	APPROVED BY
CODE NO				