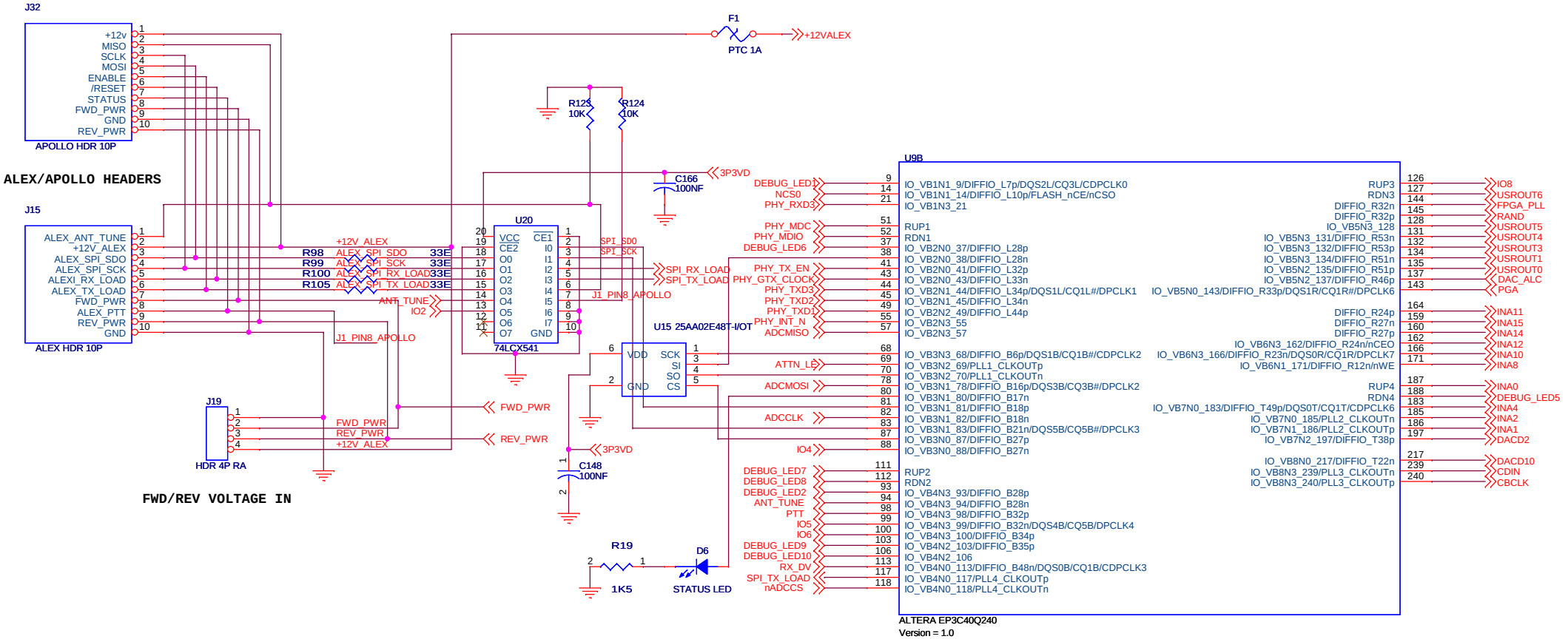

Copyright 2011 - Kevin Wheatley M0KHZ, Phil Harman VK6APH, Kjell Karlsen LA2NI and Abhi Arunoday

HPSDR		
Title	Hermes: FPGA Derived from the work of the HPSDR community. Released under TAPR Non-commercial Hardware License. http://www.tapr.org/NCL	
Size: Custom	Document Number	Rev: GAMMA v1.5
Date:	Sheet 1 of 9	

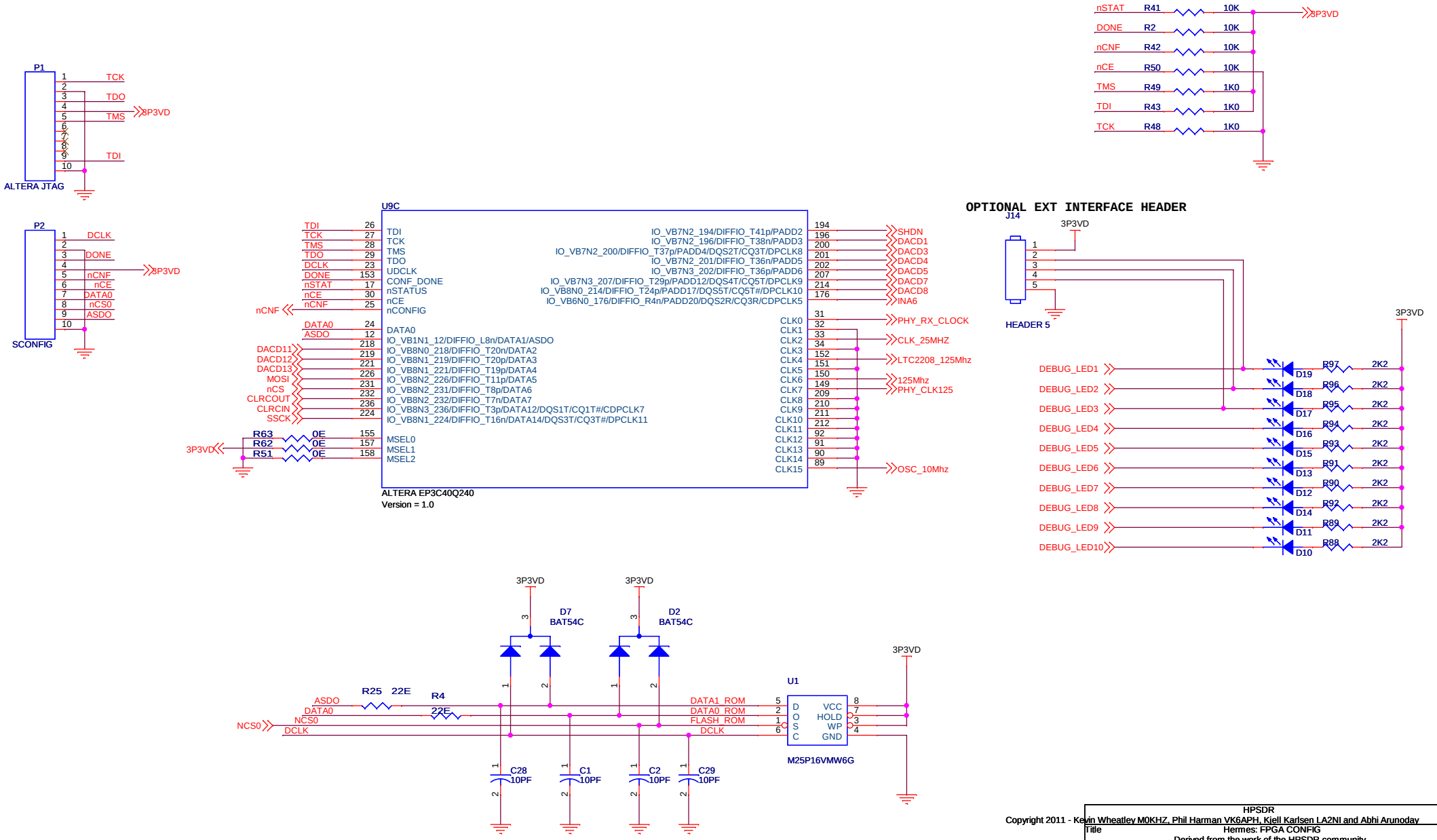

Copyright 2011 - Kevin Wheatley M0KHZ, Phil Harman VK6APH, Kjell Karlsen LA2NI and Abhi Arunoday

	HPSDR	
Title	Hermes: FPGA CONFIG	
	Derived from the work of the HPSDR community.	
	Released under TAPR Non-commercial Hardware License. http://www.tapr.org/NCL	
Size B	Document Number	Rev GAMMA v15
Date:	Sheet 2 of 9	

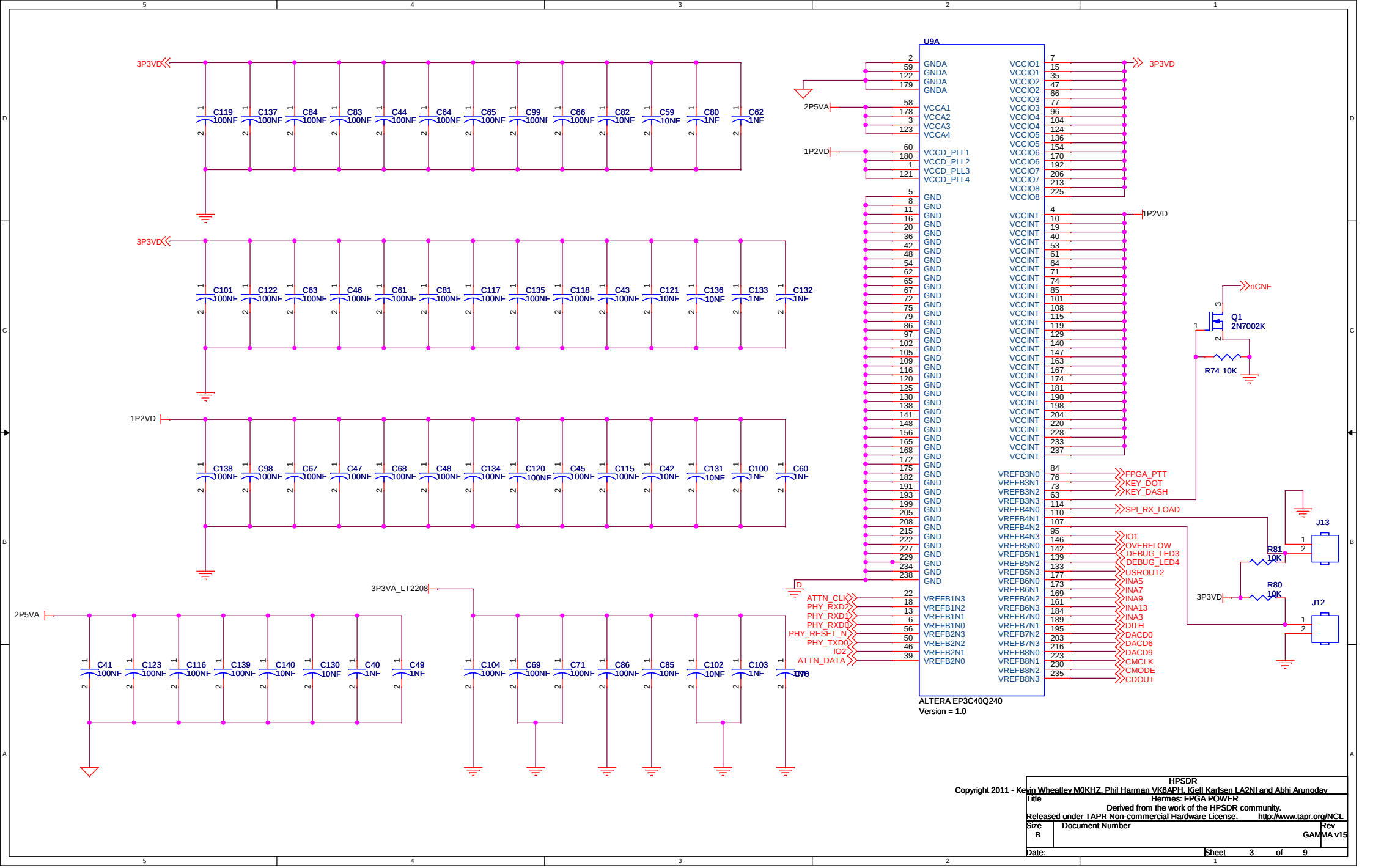

Copyright 2011 - Kevin Wheatley M0KHZ, Phil Harman VK6APH, Kjell Karlsen LA2NI and Abhi Arunoday

HPSDR	
Title	Hermes: FPGA POWER
	Derived from the work of the HPSDR community.
Released under TAPR Non-commercial Hardware License.	http://www.tapr.org/NCL
Size B	Document Number
Rev	GAMMA v15
Date:	Sheet 3 of 9

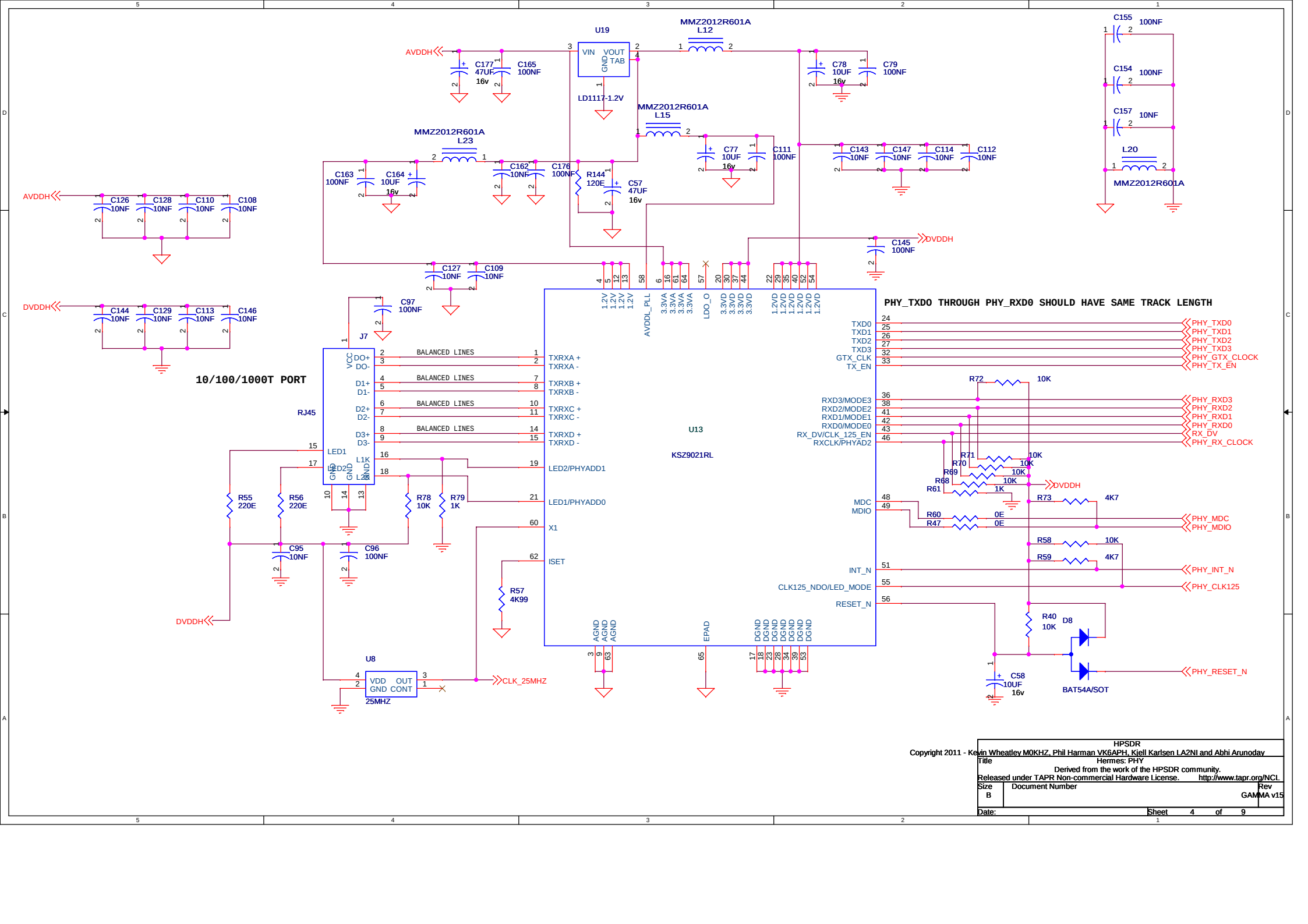

Copyright 2011 - Kevin Wheatley M0KHZ, Phil Harman VK6APH, Kjell Karlsen LA2NI and Abhi Arunoday

HPSDR		
Title	Hermes: PHY	
Derived from the work of the HPSDR community.		
Released under TAPR Non-commercial Hardware License.	http://www.tapr.org/NCL	
Size: B	Document Number	Rev: GAMMA v15
Date:	Sheet 4 of 9	

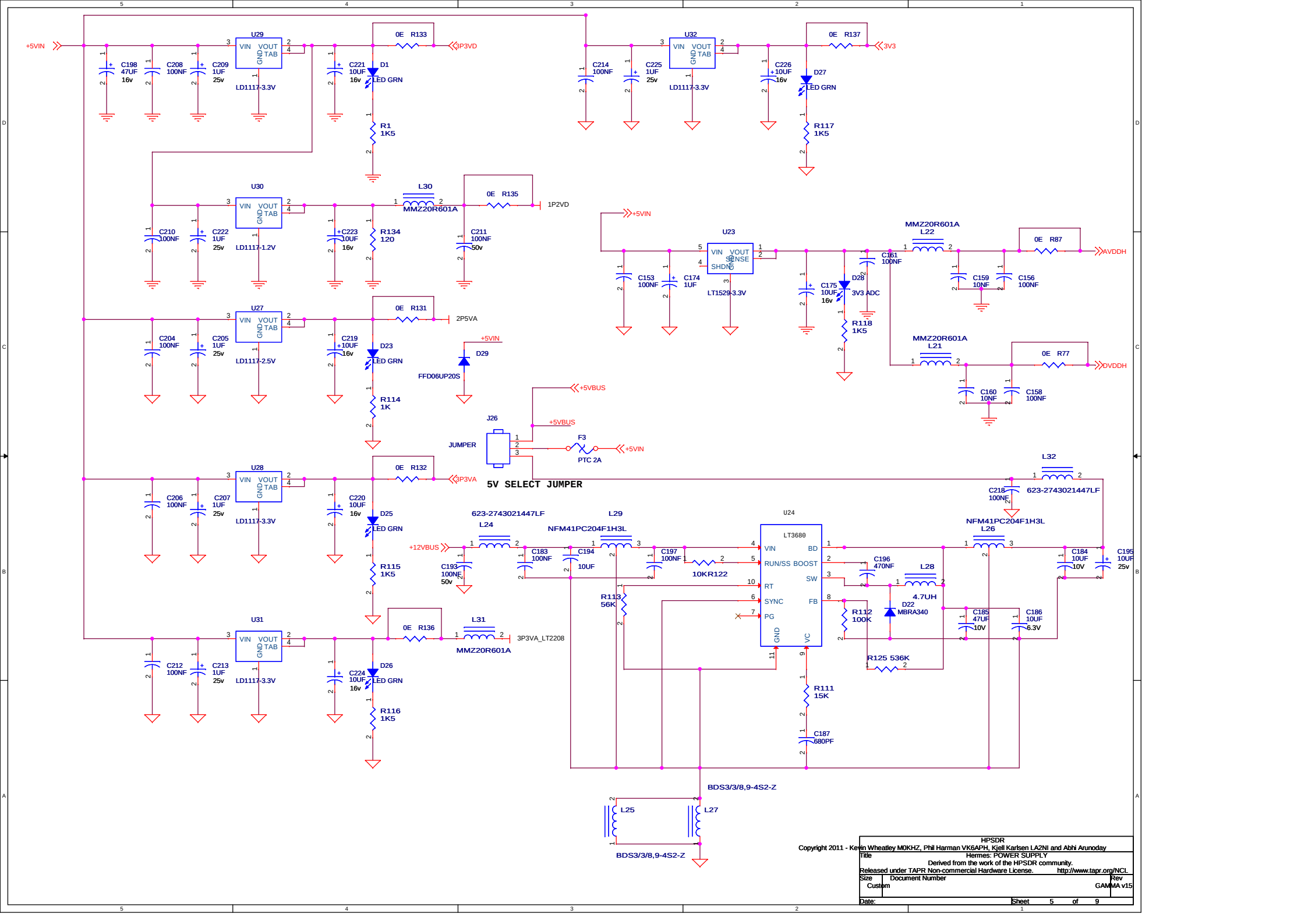

HPSDR
Copyright 2011 - Kevin Wheatley M0KHZ, Phil Harman VK6APH, Kjell Karlsen LA2NI and Abhi Arunoday

Title	Hermes: POWER SUPPLY
	Derived from the work of the HPSDR community.
	Released under TAPR Non-commercial Hardware License. http://www.tapr.org/NCL
Size: Custom	Document Number	Rev: GAMMA v15
Date:	Sheet 5 of 9

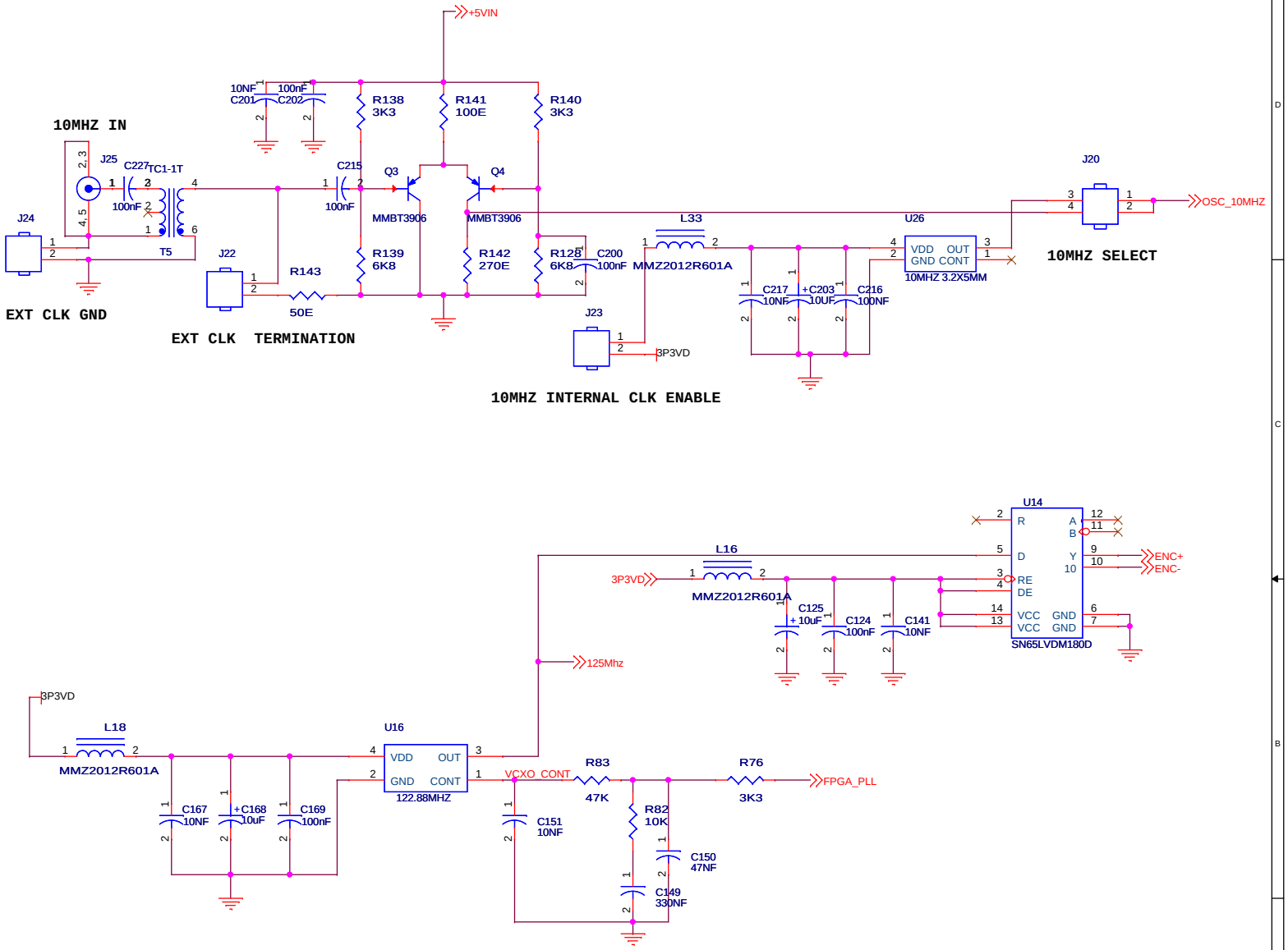

Copyright 2011 - Kevin Wheatley M0KHZ, Phil Harman VK6APH, Kjell Karlsen LA2NI and Abhi Arunoday

	HPSDR
Title	Hermes: CLOCKS
	Derived from the work of the HPSDR community.
	Released under TAPR Non-commercial Hardware License. http://www.tapr.org/NCL
Size: Custom	Document Number: GAMMA v15
Rev	
Date:	Sheet 6 of 9

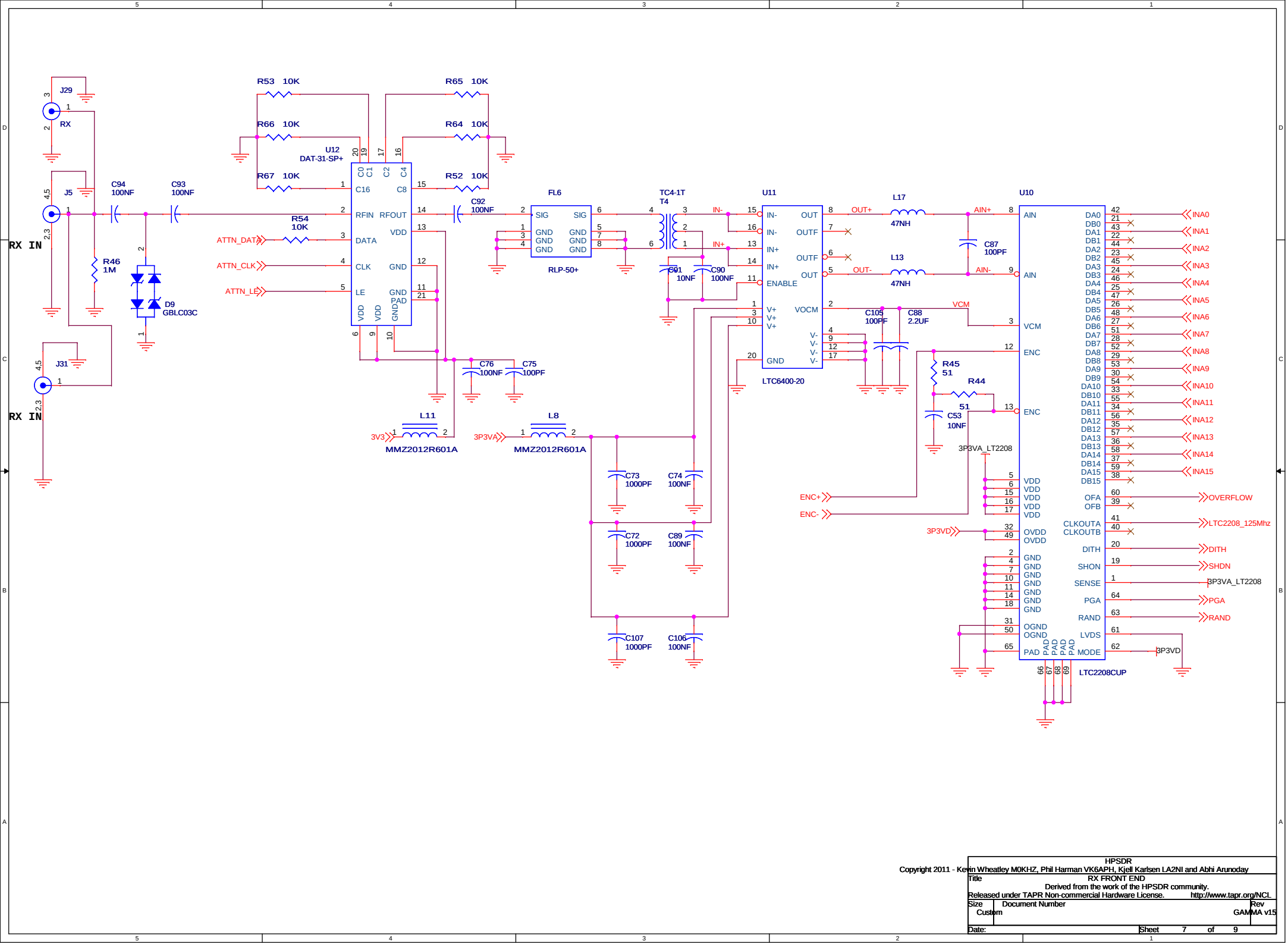

Copyright 2011 - Kevin Wheatley M0KHZ, Phil Harman VK6APH, Kjell Karlsen LA2NI and Abhi Arunoday

	HPSDR
Title	RX FRONT END
	Derived from the work of the HPSDR community.
	Released under TAPR Non-commercial Hardware License. http://www.tapr.org/NCL
Size	Custom
Document Number	
Rev	GAMMA v15
Date:	
Sheet	7 of 9

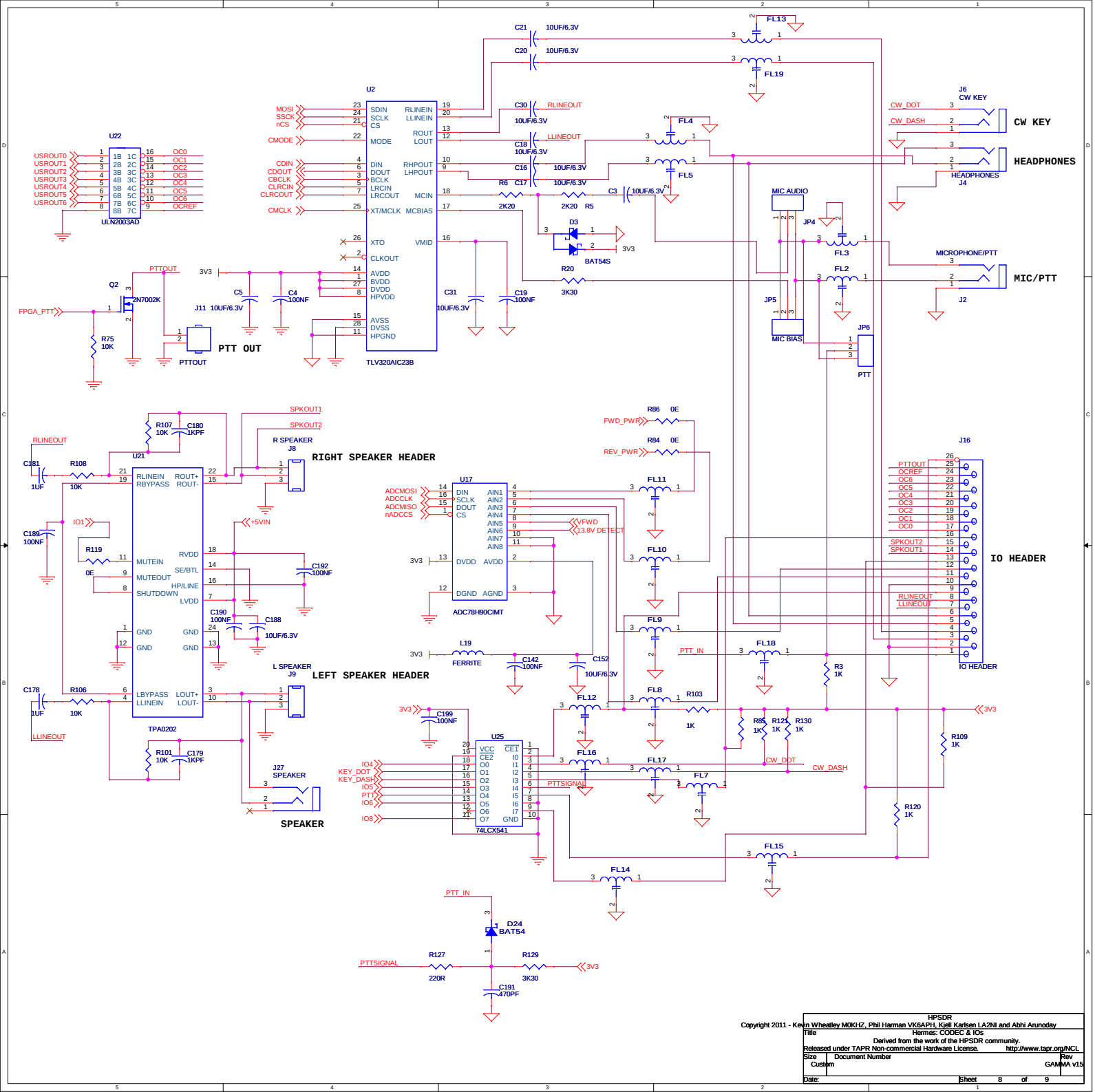

Copyright 2011 - Kevin Wheatley M0KHZ, Phil Harman VK6APH, Kjell Karlsen LA2NI and Abhi Arunoday

Title	HPSDR Hermes: CODEC & IOs Derived from the work of the HPSDR community.
Released under TAPR Non-commercial Hardware License.	http://www.tapr.org/NCL
Size: Custom	Document Number
Rev	GAMMA v15
Date:	Sheet 8 of 9

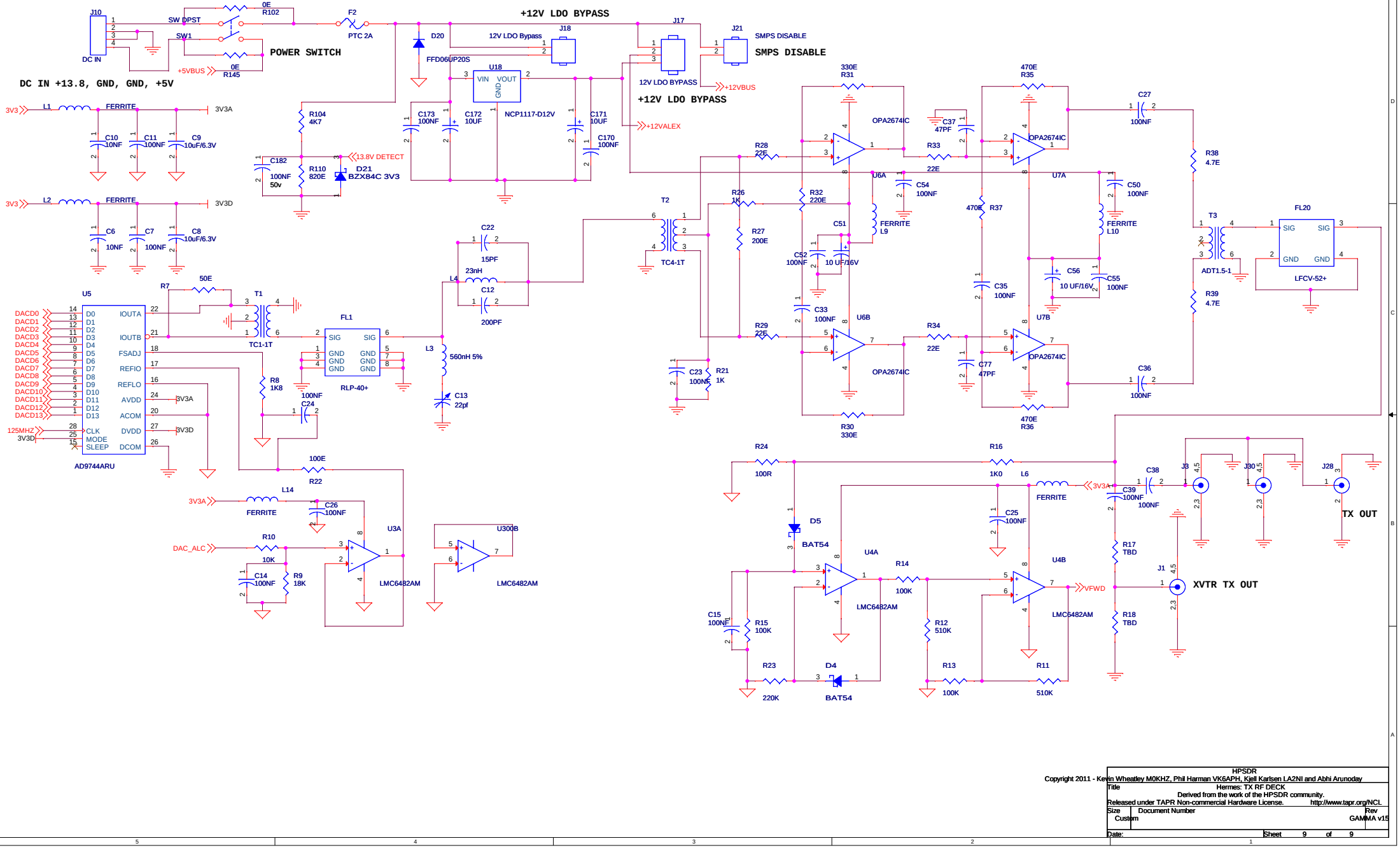

Copyright 2011 - Kevin Wheatley M0KHZ, Phil Harman VK6APH, Kjell Karlsen LA2NI and Abhi Arunoday

HPSDR	
Title	Hermes: TX RF DECK Derived from the work of the HPSDR community. Released under TAPR Non-commercial Hardware License. http://www.tapr.org/NCL
Size: Custom	Document Number: GAMMA v15
Date:	Sheet 9 of 9