Politecnico di Torino

Lab report for the course Qubit Electronics

Master degree in Quantum Engineering

Authors: Group 3

Davide Donati, Riola Leonardo Antonio, Girotto Giacomo

March 19, 2026

Contents

1 RLC Parallel Circuit Analysis **1**
1.1 RLC Parallel Circuit Analytical Analysis 1
1.2 LTspice Simulation 2
1.2.1 Resonance Frequency 2
1.2.2 Bandwidth 2
1.2.3 Quality Factor 3

2 Analysis of RLC parallel circuit changing the R, L and C values **4**

3 Josephson Junction **5**

CHAPTER 1

RLC Parallel Circuit Analysis

1.1 RLC Parallel Circuit Analytical Analysis

In this section, the resonance frequency and quality factor of a parallel RLC circuit driven by an AC current source are analytically calculated.

The parameters given in the assignment are reported in Table 1.1.

Parameter	Value
Current source I	1 A (AC)
Inductance L	3.0×10^1 nH
Resistance R	1.00×10^2 kΩ
Capacitance C	5.0×10^1 fF

Table 1.1: Circuit parameters

For a parallel RLC circuit the resonance frequency is given by

$$f_R = \frac{1}{2\pi\sqrt{LC}} \tag{1.1}$$

while the quality factor is

$$Q = R\sqrt{\frac{C}{L}} \tag{1.2}$$

Substituting the numerical values for the resonance frequency:

$$f_R = \frac{1}{2\pi\sqrt{(3.0 \times 10^1\,\text{nH})(5.0 \times 10^1\,\text{fF})}} \approx 4.109\ \text{Hz} \tag{1.3}$$

Similarly, the quality factor becomes

$$Q = (1.00 \times 10^2\,\text{k}\Omega)\sqrt{\frac{5.0 \times 10^1\,\text{fF}}{3.0 \times 10^1\,\text{nH}}} \approx 128 \tag{1.4}$$

These results provide the theoretical prediction of the ideal resonance behaviour of the circuit. In particular, the resonance frequency indicates that the circuit will exhibit a peak in impedance at approximately 4.109 Hz, while the quality factor indicates that the resonance will be relatively sharp, with a narrow bandwidth around the resonance frequency.

1.2 LTspice Simulation

In order to verify the analytical predictions, the circuit was implemented and simulated using LTspice.

Figure 3.1 shows the schematic representation of the parallel RLC circuit as implemented in LTspice.

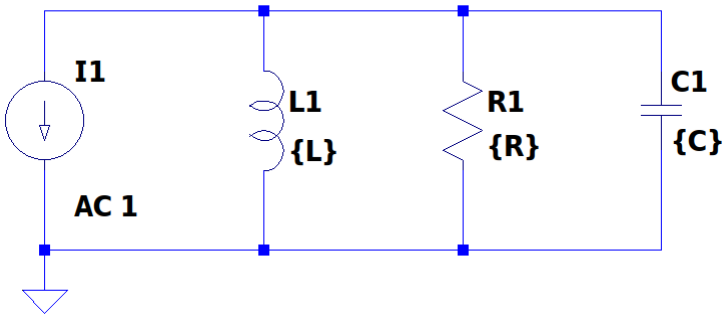

Figure 1.1: Parallel RLC circuit implemented in LTspice

The AC analysis was performed using the following simulation directive:

```
.ac dec 1000 1 20G
```

In frequency domain analysis, the impedance Z of the circuit can be calculated as the ratio of the voltage V across the circuit to the current I supplied by the source:

$$Z = \frac{V}{I} = V = 99.98\ \mathrm{k\Omega} \tag{1.5}$$

Since the current source is set to 1 A, the voltage across the circuit directly corresponds to the impedance.

1.2.1 Resonance Frequency

The resonance frequency corresponds to the frequency at which the impedance reaches its maximum value. This quantity can be extracted in LTspice using the following directive:

```
.meas AC max_v MAX mag(V(n001))
.meas AC f_res WHEN mag(V(n001))=max_v
```

The simulated resonance frequency was found to be approximately 4.109 Hz, which is in excellent agreement with the analytical prediction obtained in the previous section.

1.2.2 Bandwidth

The bandwidth of the resonance can be determined by finding the frequencies at which the impedance drops to

$$\frac{1}{\sqrt{2}} \tag{1.6}$$

of the maximum value, which corresponds to the -3 dB points of the resonance curve.

The following commands were used:

```
.meas AC v_3db PARAM max_v*0.707
.meas AC f_low WHEN mag(V(n001))=v_3db RISE=1
.meas AC f_high WHEN mag(V(n001))=v_3db FALL=1
```

The results of the simulation indicate that the lower and upper -3 dB frequencies are approximately $f_1 \approx 4.093\,\text{GHz}$ and $f_2 \approx 4.125\,\text{GHz}$, respectively.

The bandwidth is then calculated as

$$\Delta f = f_2 - f_1 \approx 31.8 \text{ MHz} \tag{1.7}$$

1.2.3 Quality Factor

Using the simulated values of the resonance frequency and the bandwidth, the quality factor can be estimated as

$$Q = \frac{f_R}{\Delta f} \approx 128.809 \tag{1.8}$$

This value is in very good agreement with the analytical prediction of $Q \approx 128$, confirming the consistency between the theoretical analysis and the simulation results.

CHAPTER 2

Analysis of RLC parallel circuit changing the R, L and C values

In this exercise, we analyze the RLC parallel circuit by changing the values of R, L and C.

	L (nH)	R (kΩ)	C (fF)
[A]	30	200	50
[B]	30	50	50
[C]	60	100	50
[D]	15	100	50
[E]	30	100	100
[F]	30	100	25

Table 2.1: Values of L, R and C for different cases

We measure the resonance frequency f_R and quality factor Q for each case and compare them with the analytical values.

	f_R analytical (GHz)	f_R experimental (GHz)	Q analytical	Q experimental
[A]	4.109	4.109	258.198	257.810
[B]	4.109	4.109	64.549	64.521
[C]	2.905	2.906	91.287	91.233
[D]	5.811	5.811	182.574	182.432
[E]	2.905	2.906	182.574	182.243
[F]	5.811	5.811	91.287	91.243

Table 2.2: Comparison between analytical and experimental resonance frequency and quality factor

The analytical predictions are consistent with the experimental results.

CHAPTER 3

Josephson Junction

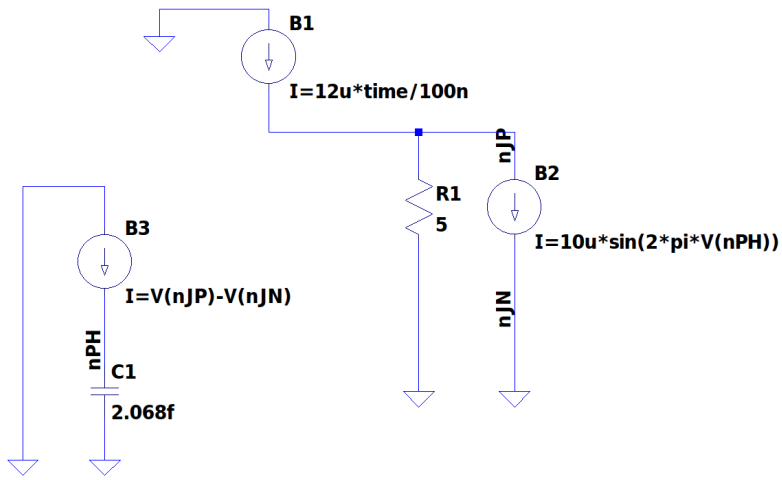

Figure 3.1: Parallel RLC circuit implemented in LTspice

The circuit shown in Figure 3.1 models a Josephson junction using a parallel RLC configuration. The left branch, composed of the controlled source $B1$ and the capacitor $C1$, generates the phase difference ϕ across the junction, since the capacitor integrates the voltage and therefore determines the phase evolution. The source $B2$ models the Josephson supercurrent $I_s = I_c \sin(\phi)$, while $R1$ represents the normal resistive channel of the junction. Finally, $B3$ provides a time-dependent bias current that drives the junction.

Peak	Time (ns)
peak 1	83.785
peak 2	84.122
peak 3	84.399
peak 4	84.643
peak 5	84.866

Table 3.1: Time of the peaks observed in the voltage across the junction.

From the peak times reported in Table 3.1, we observe that the time interval between consecutive

peaks decreases slightly, meaning that the peaks become progressively closer in time. This behavior is expected because once the bias current exceeds the critical current ($I_c = 10\,\mu\text{A}$), the junction enters the voltage state and the phase evolves according to the Josephson voltage–frequency relation

$$f = \frac{2e}{h}V.$$

As the bias current increases, the voltage across the junction also increases due to the resistive branch of the model. Since the oscillation frequency is proportional to the voltage, the peaks occur progressively closer in time, as observed in Table 3.1.