Politecnico di Torino

# Lab report for the course Qubit Electronics

Master degree in Quantum Engineering

Authors: Group 3

Davide Donati, Riola Leonardo Antonio, Girotto Giacomo

March 20, 2026

# Contents


**1 RLC Parallel Circuit Analysis** **1**

1.1 RLC Parallel Circuit Analytical Analysis . . . . . 1

1.2 LTspice Simulation . . . . . 2

1.2.1 Resonance Frequency . . . . . 2

1.2.2 Bandwidth . . . . . 2

1.2.3 Quality Factor . . . . . 3

**2 Analysis of RLC parallel circuit changing the R, L and C values** **4**

**3 Josephson Junction** **5**

**4 Design of the Qubit Characteristic** **7**

4.1 Circuit design . . . . . 7

4.2 Analysis of the simulation . . . . . 7

4.2.1 Coupled Regime . . . . . 7

4.2.2 Dispersive Regime . . . . . 8

4.2.3 Role of the Quality factor $Q$ . . . . . 8

# CHAPTER 1

# RLC Parallel Circuit Analysis

## 1.1 RLC Parallel Circuit Analytical Analysis

In this section, the resonance frequency and quality factor of a parallel RLC circuit driven by an AC current source are analytically calculated.

The parameters given in the assignment are reported in Table 1.1.

| Parameter | Value |
|---|---|
| Current source $I$ | 1 A (AC) |
| Inductance $L$ | $3.0 \times 10^1$ nH |
| Resistance $R$ | $1.00 \times 10^2$ kΩ |
| Capacitance $C$ | $5.0 \times 10^1$ fF |

Table 1.1: Circuit parameters

For a parallel RLC circuit the resonance frequency is given by

$$f_R = \frac{1}{2\pi\sqrt{LC}} \tag{1.1}$$

while the quality factor is

$$Q = R\sqrt{\frac{C}{L}} \tag{1.2}$$

Substituting the numerical values for the resonance frequency:

$$f_R = \frac{1}{2\pi\sqrt{(3.0 \times 10^1\,\text{nH})(5.0 \times 10^1\,\text{fF})}} \approx 4.109\ \text{Hz} \tag{1.3}$$

Similarly, the quality factor becomes

$$Q = (1.00 \times 10^2\,\text{k}\Omega)\sqrt{\frac{5.0 \times 10^1\,\text{fF}}{3.0 \times 10^1\,\text{nH}}} \approx 128 \tag{1.4}$$

These results provide the theoretical prediction of the ideal resonance behaviour of the circuit. In particular, the resonance frequency indicates that the circuit will exhibit a peak in impedance at approximately 4.109 Hz, while the quality factor indicates that the resonance will be relatively sharp, with a narrow bandwidth around the resonance frequency.

## 1.2 LTspice Simulation

In order to verify the analytical predictions, the circuit was implemented and simulated using LTspice.

Figure 3.1 shows the schematic representation of the parallel RLC circuit as implemented in LTspice.

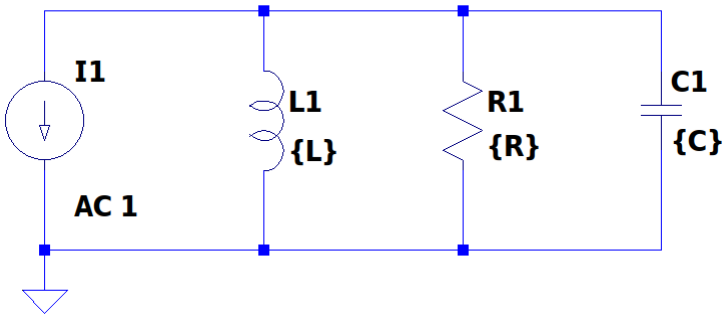


Figure 1.1: Parallel RLC circuit implemented in LTspice

The AC analysis was performed using the following simulation directive:

```
.ac dec 1000 1 20G
```

In frequency domain analysis, the impedance $Z$ of the circuit can be calculated as the ratio of the voltage $V$ across the circuit to the current $I$ supplied by the source:

$$Z = \frac{V}{I} = V = 99.98\ \mathrm{k\Omega} \tag{1.5}$$

Since the current source is set to 1 A, the voltage across the circuit directly corresponds to the impedance.

### 1.2.1 Resonance Frequency

The resonance frequency corresponds to the frequency at which the impedance reaches its maximum value. This quantity can be extracted in LTspice using the following directive:

```
.meas AC max_v MAX mag(V(n001))
.meas AC f_res WHEN mag(V(n001))=max_v
```

The simulated resonance frequency was found to be approximately 4.109 Hz, which is in excellent agreement with the analytical prediction obtained in the previous section.

### 1.2.2 Bandwidth

The bandwidth of the resonance can be determined by finding the frequencies at which the impedance drops to

$$\frac{1}{\sqrt{2}} \tag{1.6}$$

of the maximum value, which corresponds to the -3 dB points of the resonance curve.

The following commands were used:

```
.meas AC v_3db PARAM max_v*0.707
.meas AC f_low WHEN mag(V(n001))=v_3db RISE=1
.meas AC f_high WHEN mag(V(n001))=v_3db FALL=1
```

The results of the simulation indicate that the lower and upper -3 dB frequencies are approximately $f_1 \approx 4.093\,\text{GHz}$ and $f_2 \approx 4.125\,\text{GHz}$, respectively.

The bandwidth is then calculated as

$$\Delta f = f_2 - f_1 \approx 31.8 \text{ MHz} \tag{1.7}$$

### 1.2.3 Quality Factor

Using the simulated values of the resonance frequency and the bandwidth, the quality factor can be estimated as

$$Q = \frac{f_R}{\Delta f} \approx 128.809 \tag{1.8}$$

This value is in very good agreement with the analytical prediction of $Q \approx 128$, confirming the consistency between the theoretical analysis and the simulation results.

# CHAPTER 2

# Analysis of RLC parallel circuit changing the R, L and C values

In this exercise, we analyze the RLC parallel circuit by changing the values of R, L and C.

| | L (nH) | R (kΩ) | C (fF) |
|---|---|---|---|
| [A] | 30 | 200 | 50 |
| [B] | 30 | 50 | 50 |
| [C] | 60 | 100 | 50 |
| [D] | 15 | 100 | 50 |
| [E] | 30 | 100 | 100 |
| [F] | 30 | 100 | 25 |

Table 2.1: Values of L, R and C for different cases

We measure the resonance frequency $f_R$ and quality factor $Q$ for each case and compare them with the analytical values.

| | $f_R$ analytical (GHz) | $f_R$ experimental (GHz) | $Q$ analytical | $Q$ experimental |
|---|---|---|---|---|
| [A] | 4.109 | 4.109 | 258.198 | 257.810 |
| [B] | 4.109 | 4.109 | 64.549 | 64.521 |
| [C] | 2.905 | 2.906 | 91.287 | 91.233 |
| [D] | 5.811 | 5.811 | 182.574 | 182.432 |
| [E] | 2.905 | 2.906 | 182.574 | 182.243 |
| [F] | 5.811 | 5.811 | 91.287 | 91.243 |

Table 2.2: Comparison between analytical and experimental resonance frequency and quality factor

The analytical predictions are consistent with the experimental results.

# CHAPTER 3

# Josephson Junction

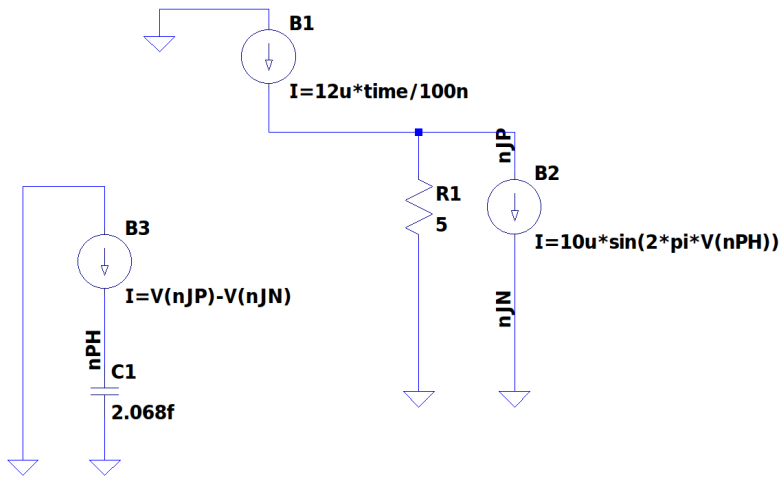


Figure 3.1: Parallel RLC circuit implemented in LTspice

The circuit shown in Figure 3.1 models a Josephson junction using a parallel RLC configuration. The left branch, composed of the controlled source $B1$ and the capacitor $C1$, generates the phase difference $\phi$ across the junction, since the capacitor integrates the voltage and therefore determines the phase evolution. The source $B2$ models the Josephson supercurrent $I_s = I_c \sin(\phi)$, while $R1$ represents the normal resistive channel of the junction. Finally, $B3$ provides a time-dependent bias current that drives the junction.

| Peak | Time (ns) |
|---|---|
| peak 1 | 83.785 |
| peak 2 | 84.122 |
| peak 3 | 84.399 |
| peak 4 | 84.643 |
| peak 5 | 84.866 |

Table 3.1: Time of the peaks observed in the voltage across the junction.

From the peak times reported in Table 3.1, we observe that the time interval between consecutive

peaks decreases slightly, meaning that the peaks become progressively closer in time. This behavior is expected because once the bias current exceeds the critical current ($I_c = 10\,\mu\text{A}$), the junction enters the voltage state and the phase evolves according to the Josephson voltage–frequency relation

$$f = \frac{2e}{h}V.$$

As the bias current increases, the voltage across the junction also increases due to the resistive branch of the model. Since the oscillation frequency is proportional to the voltage, the peaks occur progressively closer in time, as observed in Table 3.1.

# CHAPTER 4

# Design of the Qubit Characteristic

## 4.1 Circuit design

We designed the circuit depicted in figure **??** so that the resonance frequency of the resonator $f_r$ sweeps the range from 6GHz to 11GHz with 250MHz steps: to do so we used the analitical formula for the resonance frequency and found the values of $Lr1$ for each frequency. The two edges values of $Lr1$ are $14.072nH$ and $4.187nH$ for $f_r = 6GHz$ and $f_r = 11GHz$ respectively. Concerning the Qubit, we calculated the value of $Lq1$ to be $23.45nH$ to have a resonance frequency of $f_q = 6GHz$, while the value of $Rq1$ is set to $8.841M\Omega$ to have a quality factor of $Q = 10^4$.

## 4.2 Analysis of the simulation

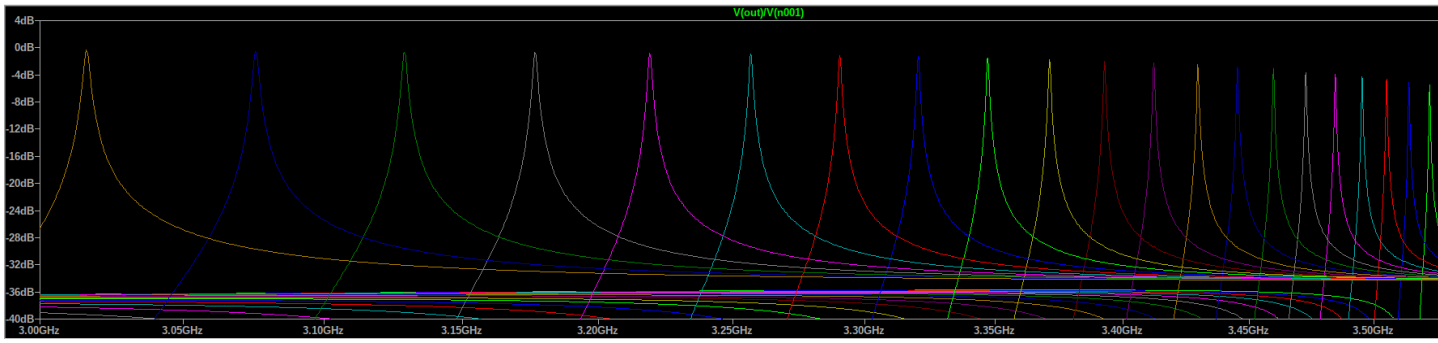


Figure 4.1: Transfer function with given parameters.

The graph in figure 4.1 shows the tranfer function $S = \frac{V_{out}}{V_{in}}$ where $V_{out}$ is the voltage across $R2$ and $V_{in}$ is the voltage across $R1$. The different resonance frequencies obtained correspond to the different values of $Lr1$ and so to the different values of $f_r$.

### 4.2.1 Coupled Regime

When $f_r$ is tuned close to the qubit frequency $f_q$ ($\Delta = f_r - f_q \approx 0$), the system enters the strong coupling regime. In this situation, that corresponds to the resonance observed at $\approx 3.52\,\text{GHz}$ in the graph, the qubit and the resonator undergo **hybridization**. During this resonant interaction, there is a coherent exchange of energy between the two. Consequently, the resonator "inherits" the dissipation

characteristics of the qubit, specifically the losses associated with the resistor $R_{q1}$. This compromises the resonator's ability to act as an ideal open-circuit, and so a portion of the signal is transferred to the ground through the resistor $Rq1$, resulting in the observed **negative gain** in the transfer function.

### 4.2.2 Dispersive Regime

When instead $f_r$ is significantly detuned from $f_q$ ($|\Delta| \gg g$, where $g$ is the coupling strenght between the qubit and the resonator), the system operates in the **dispersive regime**. In the graph, this corresponds to the peak located at approximately $3.01GHz$. In this regime, the energy exchange between the qubit and the resonator is suppressed, and the resonator is decoupled from the qubit's dissipative element $R_{q1}$. As a result, the transfer function exhibits an almost **unitary gain** ($\approx 0\,\text{dB}$), indicating that the parallel LC structure successfully blocks the signal from leaking to ground at its resonance frequency. However, the qubit's state still will affect the resonator's resonance frequency through a dispersive shift $\chi = \frac{g^2}{\Delta}$. In fact, by fixing the inductance $L_{r1}$ and varying the qubit's parameters (and thus $f_q$), a measurable shift in the resonant peak $f_r$ is observed. This shift allows the determination of the qubit's state by monitoring the transmission spectrum of the coupled resonator.

### 4.2.3 Role of the Quality factor $Q$

The quality factor $Q$ of the qubit, has a significant impact on the system's response: a higher $Q$, which means a higher $Rq1$, results in a less power dissipated through the qubit due to the shunted configuration with the input signal, as depicted in figure 4.2, where in this case we can observe that all the peaks have a gain of $\approx 0db$. Moreover, a higher $Q$ will lead to a narrower resonance peaks in the resonator's response, enhancing its sensitivity to the qubit's state.

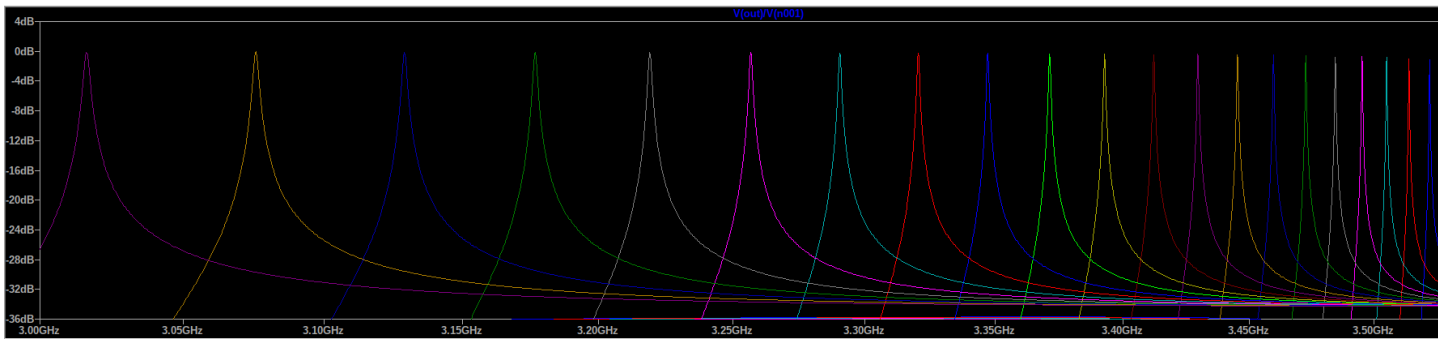


Figure 4.2: Transfer function with $Q \approx 11 * 10^4$