Politecnico di Torino

Lab report for the course Qubit Electronics

Master degree in Quantum Engineering

Authors: Group 3

Davide Donati, Riola Leonardo Antonio, Girotto Giacomo

March 22, 2026

Contents

1 RLC Parallel Circuit Analysis **1**
1.1 RLC Parallel Circuit Analytical Analysis . . . 1
1.2 LTspice Simulation . . . 2
1.2.1 Resonance Frequency . . . 2
1.2.2 Bandwidth . . . 2
1.2.3 Quality Factor . . . 3

2 Analysis of RLC parallel circuit changing the R, L and C values **4**

3 Josephson Junction **5**

4 Analysis of the circuit **7**

5 Design of the Qubit Characteristic **9**
5.1 Circuit design . . . 9
5.2 Analysis of the simulation . . . 9
5.2.1 Coupled Regime . . . 9
5.2.2 Dispersive Regime . . . 10
5.2.3 Role of the Quality factor Q . . . 10

6 Uncertainty **11**
6.1 Analysis of the simulation . . . 11

CHAPTER 1

RLC Parallel Circuit Analysis

1.1 RLC Parallel Circuit Analytical Analysis

In this section, the resonance frequency and quality factor of a parallel RLC circuit driven by an AC current source are analytically calculated.

The parameters given in the assignment are reported in Table 1.1.

Parameter	Value
Current source I	1 A (AC)
Inductance L	3.0×10^1 nH
Resistance R	1.00×10^2 kΩ
Capacitance C	5.0×10^1 fF

Table 1.1: Circuit parameters

For a parallel RLC circuit the resonance frequency is given by

$$f_R = \frac{1}{2\pi\sqrt{LC}} \tag{1.1}$$

while the quality factor is

$$Q = R\sqrt{\frac{C}{L}} \tag{1.2}$$

Substituting the numerical values for the resonance frequency:

$$f_R = \frac{1}{2\pi\sqrt{(3.0 \times 10^1\,\text{nH})(5.0 \times 10^1\,\text{fF})}} \approx 4.109\ \text{Hz} \tag{1.3}$$

Similarly, the quality factor becomes

$$Q = (1.00 \times 10^2\,\text{k}\Omega)\sqrt{\frac{5.0 \times 10^1\,\text{fF}}{3.0 \times 10^1\,\text{nH}}} \approx 128 \tag{1.4}$$

These results provide the theoretical prediction of the ideal resonance behaviour of the circuit. In particular, the resonance frequency indicates that the circuit will exhibit a peak in impedance at approximately 4.109 Hz, while the quality factor indicates that the resonance will be relatively sharp, with a narrow bandwidth around the resonance frequency.

1.2 LTspice Simulation

In order to verify the analytical predictions, the circuit was implemented and simulated using LTspice.

Figure 3.1 shows the schematic representation of the parallel RLC circuit as implemented in LTspice.

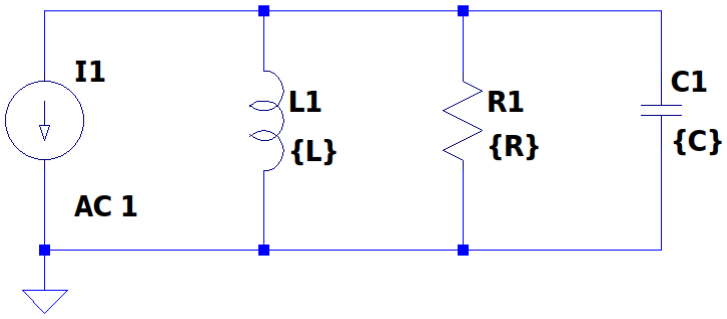

Figure 1.1: Parallel RLC circuit implemented in LTspice

The AC analysis was performed using the following simulation directive:

```
.ac dec 1000 1 20G
```

In frequency domain analysis, the impedance Z of the circuit can be calculated as the ratio of the voltage V across the circuit to the current I supplied by the source:

$$Z = \frac{V}{I} = V = 99.98\ \mathrm{k\Omega} \tag{1.5}$$

Since the current source is set to 1 A, the voltage across the circuit directly corresponds to the impedance.

1.2.1 Resonance Frequency

The resonance frequency corresponds to the frequency at which the impedance reaches its maximum value. This quantity can be extracted in LTspice using the following directive:

```
.meas AC max_v MAX mag(V(n001))
.meas AC f_res WHEN mag(V(n001))=max_v
```

The simulated resonance frequency was found to be approximately 4.109 Hz, which is in excellent agreement with the analytical prediction obtained in the previous section.

1.2.2 Bandwidth

The bandwidth of the resonance can be determined by finding the frequencies at which the impedance drops to

$$\frac{1}{\sqrt{2}} \tag{1.6}$$

of the maximum value, which corresponds to the -3 dB points of the resonance curve.

The following commands were used:

```
.meas AC v_3db PARAM max_v*0.707
.meas AC f_low WHEN mag(V(n001))=v_3db RISE=1
.meas AC f_high WHEN mag(V(n001))=v_3db FALL=1
```

The results of the simulation indicate that the lower and upper -3 dB frequencies are approximately $f_1 \approx 4.093\,\text{GHz}$ and $f_2 \approx 4.125\,\text{GHz}$, respectively.

The bandwidth is then calculated as

$$\Delta f = f_2 - f_1 \approx 31.8 \text{ MHz} \tag{1.7}$$

1.2.3 Quality Factor

Using the simulated values of the resonance frequency and the bandwidth, the quality factor can be estimated as

$$Q = \frac{f_R}{\Delta f} \approx 128.809 \tag{1.8}$$

This value is in very good agreement with the analytical prediction of $Q \approx 128$, confirming the consistency between the theoretical analysis and the simulation results.

CHAPTER 2

Analysis of RLC parallel circuit changing the R, L and C values

In this exercise, we analyze the RLC parallel circuit by changing the values of R, L and C.

	L (nH)	R (kΩ)	C (fF)
[A]	30	200	50
[B]	30	50	50
[C]	60	100	50
[D]	15	100	50
[E]	30	100	100
[F]	30	100	25

Table 2.1: Values of L, R and C for different cases

We measure the resonance frequency f_R and quality factor Q for each case and compare them with the analytical values.

	f_R analytical (GHz)	f_R experimental (GHz)	Q analytical	Q experimental
[A]	4.109	4.109	258.198	257.810
[B]	4.109	4.109	64.549	64.521
[C]	2.905	2.906	91.287	91.233
[D]	5.811	5.811	182.574	182.432
[E]	2.905	2.906	182.574	182.243
[F]	5.811	5.811	91.287	91.243

Table 2.2: Comparison between analytical and experimental resonance frequency and quality factor

The analytical predictions are consistent with the experimental results.

CHAPTER 3

Josephson Junction

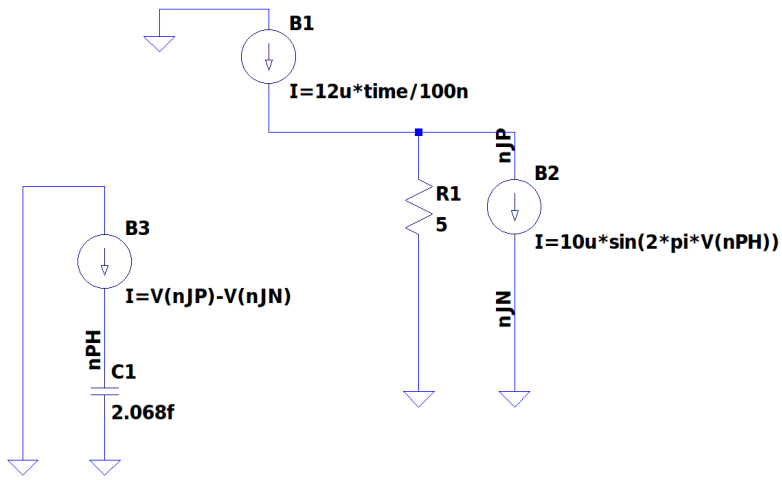

Figure 3.1: Parallel RLC circuit implemented in LTspice

The circuit shown in Figure 3.1 models a Josephson junction using a parallel RLC configuration. The left branch, composed of the controlled source $B1$ and the capacitor $C1$, generates the phase difference ϕ across the junction, since the capacitor integrates the voltage and therefore determines the phase evolution. The source $B2$ models the Josephson supercurrent $I_s = I_c \sin(\phi)$, while $R1$ represents the normal resistive channel of the junction. Finally, $B3$ provides a time-dependent bias current that drives the junction.

Peak	Time (ns)
peak 1	83.785
peak 2	84.122
peak 3	84.399
peak 4	84.643
peak 5	84.866

Table 3.1: Time of the peaks observed in the voltage across the junction.

From the peak times reported in Table 3.1, we observe that the time interval between consecutive

peaks decreases slightly, meaning that the peaks become progressively closer in time. This behavior is expected because once the bias current exceeds the critical current ($I_c = 10\,\mu\text{A}$), the junction enters the voltage state and the phase evolves according to the Josephson voltage–frequency relation

$$f = \frac{2e}{h}V.$$

As the bias current increases, the voltage across the junction also increases due to the resistive branch of the model. Since the oscillation frequency is proportional to the voltage, the peaks occur progressively closer in time, as observed in Table 3.1.

CHAPTER 4

Analysis of the circuit

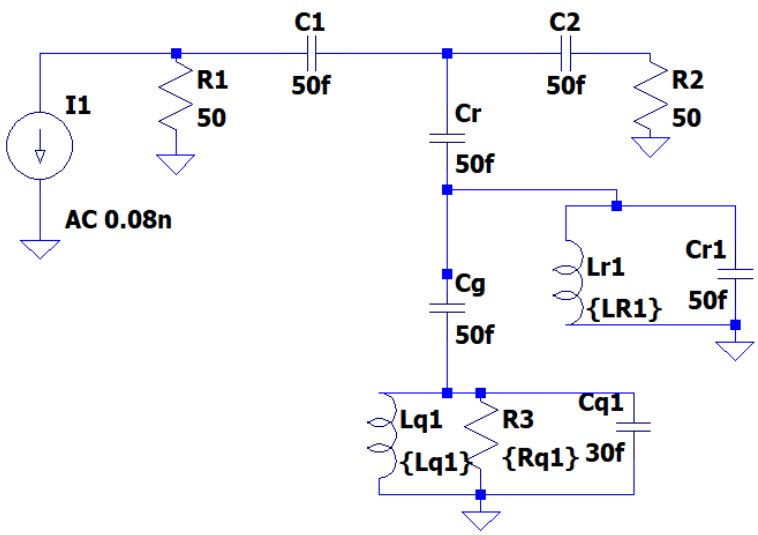

Figure 4.1: Transmission line coupled to the qubit and readout resonator implemented in LTspice.

The circuit shown in Fig. 4.1 is analyzed for three different values of the qubit inductance, namely $L_{q1} = 20.45\,\text{nH}$, $23.45\,\text{nH}$, and $26.45\,\text{nH}$, in order to evaluate its impact on the system response.

From the Bode diagram, it is observed that the position of the resonance peak varies with the inductance. This behavior is consistent with the dependence of the resonance frequency on the LC parameters of the qubit, according to

$$f_q = \frac{1}{2\pi\sqrt{L_q C_q}}. \tag{4.1}$$

The extracted peak frequencies are reported in the following table:

Step	f_{peak} (Hz)
1	3.113×10^9
2	3.016×10^9
3	2.921×10^9

Table 4.1: Peak frequencies for different values of the qubit inductance.

The results show a clear shift of the resonance frequency as the qubit inductance is modified.

This variation of L_q effectively models the action of the flux line, which tunes the qubit frequency by modifying its effective Josephson inductance, allowing controlled shifts of the resonance.

CHAPTER 5

Design of the Qubit Characteristic

5.1 Circuit design

We designed the circuit depicted in figure 4.1 so that the resonance frequency of the resonator f_r sweeps the range from 6GHz to 11GHz with 250MHz steps: to do so we used the analitical formula for the resonance frequency and found the values of $Lr1$ for each frequency. The two edges values of $Lr1$ are $14.072nH$ and $4.187nH$ for $f_r = 6GHz$ and $f_r = 11GHz$ respectively. Concerning the Qubit, we calculated the value of $Lq1$ to be $23.45nH$ to have a resonance frequency of $f_q = 6GHz$, while the value of $Rq1$ is set to $8.841M\Omega$ to have a quality factor of $Q = 10^4$.

5.2 Analysis of the simulation

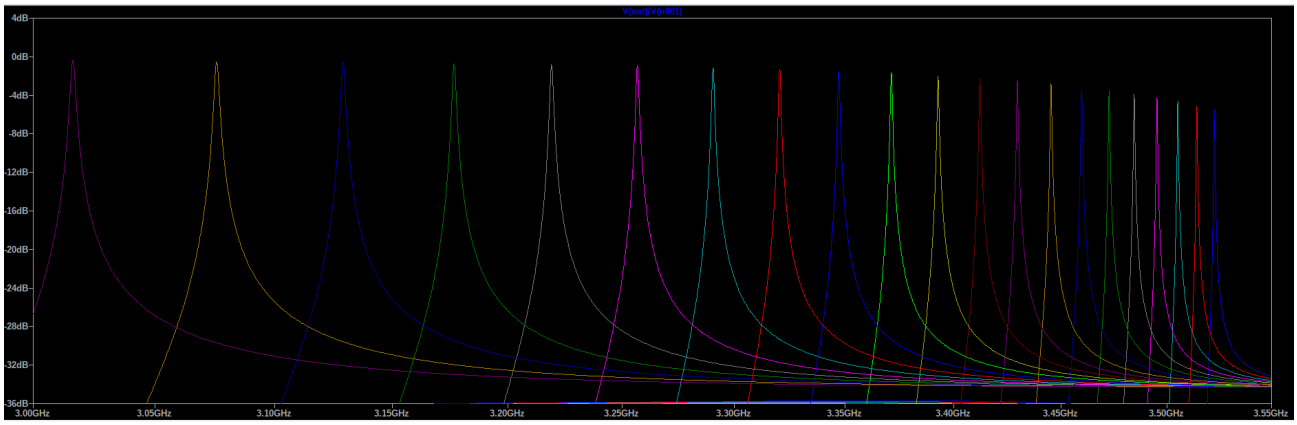

Figure 5.1: Transfer function with given parameters.

The graph in figure 5.1 shows the tranfer function $S = \frac{V_{out}}{V_{in}}$ where V_{out} is the voltage across $R2$ and V_{in} is the voltage across $R1$. The different resonance frequencies obtained correspond to the different values of $Lr1$ and so to the different values of f_r.

5.2.1 Coupled Regime

When f_r is tuned close to the qubit frequency f_q ($\Delta = f_r - f_q \approx 0$), the system enters the strong coupling regime. In this situation, that corresponds to the resonance observed at $\approx$ 3.01GHz in the

graph, the qubit and the resonator undergo **hybridization**. Here, we observe a lower quality factor of the system (the peak has a wider bandwidth) due to the fact that the resonator and the qubit are strongly coupled, and the energy can be efficiently exchanged between them, resulting in a dissipation of energy through the resistance $Rq1$ and a "dirtier" behaviour of the ideal resonator. However, in such lower frequencies, the impedance of Cg is higher, so the input signal is less affected by the dissipative element of the qubit, resulting in a higher gain ($\approx 0db$).

5.2.2 Dispersive Regime

When instead f_r is significantly detuned from f_q ($|\Delta| \gg g$, where g is the coupling strength between the qubit and the resonator), the system operates in the **dispersive regime**. In the graph, this corresponds to the peak located at approximately $3.52GHz$. In this regime, the energy exchange between the qubit and the resonator is suppressed, and the resonator is decoupled from the qubit. As a result, the resonator behaves more like an ideal one, contributing to a higher quality factor (narrower peaks) of the system. On the other hand, the input signal is more attenuated (negative gain) due to the lower impedance of Cg, which allows more power to be dissipated through the resistance $Rq1$. However, the qubit's state will still affect the resonator's resonance frequency through a dispersive shift $\chi = \frac{g^2}{\Delta}$. In fact, by fixing the inductance L_{r1} and varying the qubit's parameters (and thus f_q), a measurable shift in the resonant peak f_r is observed. This shift allows the determination of the qubit's state by monitoring the transmission spectrum of the coupled resonator.

5.2.3 Role of the Quality factor Q

The quality factor Q of the qubit, has a significant impact on the system's response: a higher Q, which means a higher $Rq1$, results in a less power dissipated through the qubit due to the shunted configuration with the input signal, as depicted in figure 5.2, where in this case we can observe that all the peaks have a gain of $\approx 0db$. Moreover, a higher Q will lead to a narrower resonance peaks in the resonator's response, enhancing its sensitivity to the qubit's state.

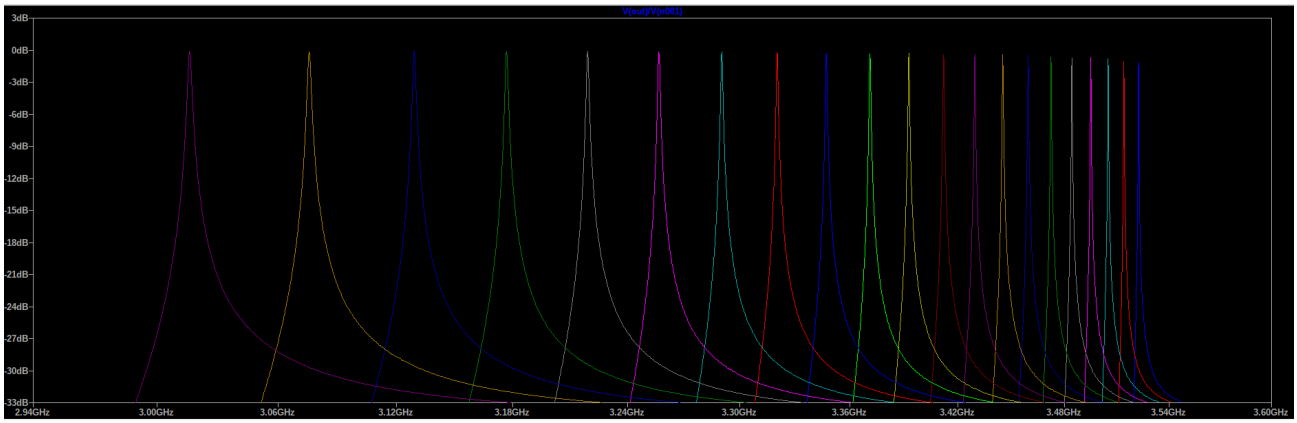

Figure 5.2: Transfer function with $Q \approx 11 * 10^4$

CHAPTER 6

Uncertainty

Working on the previous circuit showd in 4.1, we now consider a variation of the capacitance C_g = 50fF $\pm 5\%$ over 100 samples using a Monte Carlo method.

6.1 Analysis of the simulation

Focussing on the case of $Lr1 = 9.006n$H ($f_r = 7.5Ghz$), the resonance frequency of the resonator coupled with the system without any variation of C_g is $f_r = 3.29Ghz$, while inserting uncertainty this nominal value is spreaded over a range of $\approx 120Mhz$ (see 6.1). This spread is far larger than the shift in the resonance frequency due to the qubit's state, which is of the order of $\approx 10MHz$. This points out the importance of the reliabilty of the components and the minimization of the stochastic noise in the system.

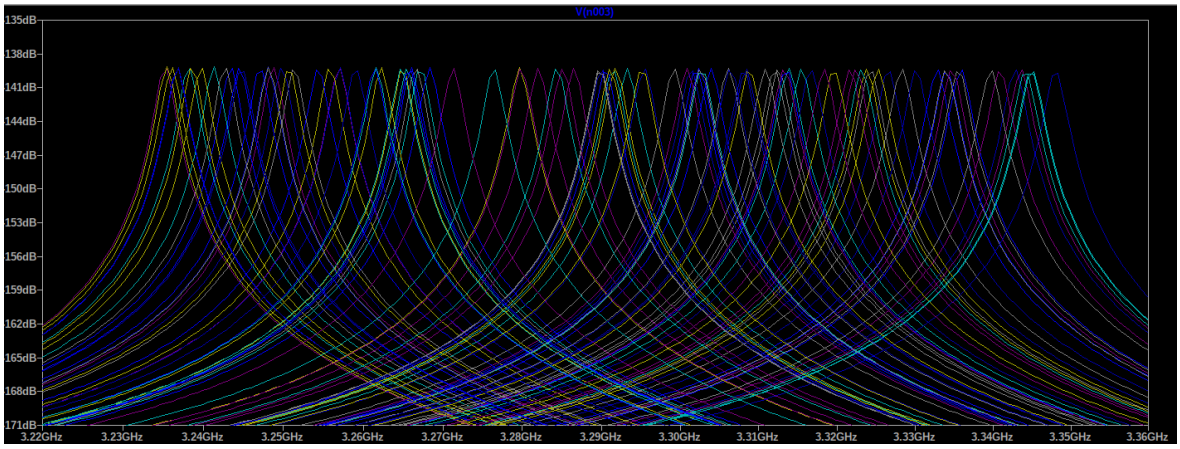

Figure 6.1: Spread of f_r

To mitigate the impact of the uncertainty in C_g, one can lower its nominal value, which will result in a less sensitive frequency shift ($\approx 60MHz$) due to its variation as shown in 6.2.
However, this leads also to a smaller quality factor Q of the resonator and so to a less sharp resonance peak, representing a higher loss-rate $k = \frac{f_r * 2\pi}{Q}$. This introduce a trade-off between the robustness of the system to the uncertainty and the quality of the resonator.

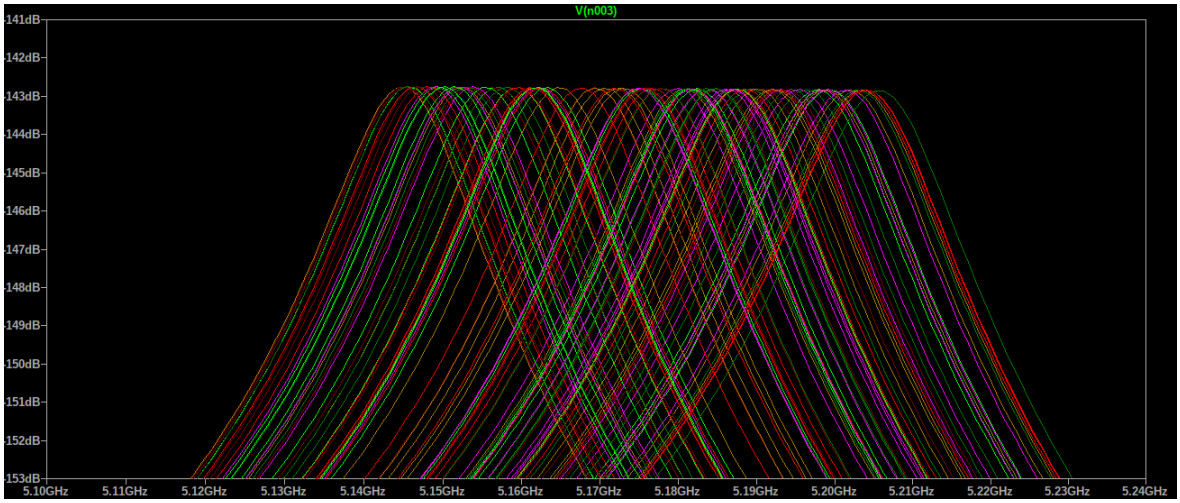

Figure 6.2: Spread of f_r with $C_g = 7$fF