Politecnico di Torino

Lab report for the course Qubit Electronics

Master degree in Quantum Engineering

Authors: Group 3

Davide Donati, Riola Leonardo Antonio, Girotto Giacomo

March 24, 2026

Contents

1 RLC Parallel Circuit Analysis **1**
1.1 RLC parallel circuit analytical analysis . . . 1
1.2 LTspice Simulation . . . 1
1.3 Resonance Frequency . . . 1
1.4 Bandwidth . . . 2
1.5 Quality Factor . . . 2

2 Analysis of RLC parallel circuit changing the R, L and C values **3**

3 Design an RLC parallel circuit **3**
3.1 Analytical calculation of R and L . . . 4
3.2 LTspice simulation . . . 4

4 Josephson Junction **4**
4.1 Josephson Junction Simulation . . . 4
4.2 AC Josephson Effect . . . 5
4.3 Time analysis of the peaks . . . 5

5 Analysis of the circuit **6**
5.1 Transmission line coupled to the qubit and readout resonator . . . 6
5.2 Resonance peaks . . . 6

6 Design of the Qubit Characteristic **7**
6.1 Circuit design . . . 7
6.2 Analysis of the simulation . . . 7
6.3 Coupled Regime . . . 7
6.4 Dispersive Regime . . . 8
6.5 Role of the Quality factor Q . . . 8

7 Uncertainty **8**
7.1 Analysis of the simulation . . . 8

1. RLC Parallel Circuit Analysis

1.1 RLC parallel circuit analytical analysis

Parameter	Value
Current source I	1 A (AC)
Inductance L	3.0×10^{1} nH
Resistance R	1.00×10^{2} kΩ
Capacitance C	5.0×10^{1} fF

Table 1.1: Circuit parameters

Given the parameters in Table 1.1, we calculated the resonance frequency and quality factor of the parallel RLC circuit using analytical formulas:

$$f_r = \frac{1}{2\pi\sqrt{LC}} \qquad Q = R\sqrt{\frac{C}{L}} \tag{1.1}$$

Substituting the numerical values we obtain:

$$f_r = 4.109 \text{ Hz} \qquad Q = 128 \tag{1.2}$$

1.2 LTspice Simulation

Figure 1.1 shows the schematic representation of the parallel RLC circuit as implemented in LTspice.

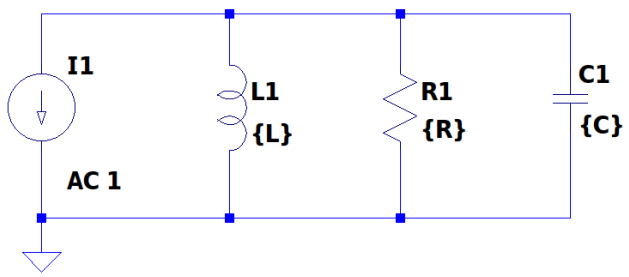

Figure 1.1: Parallel RLC circuit implemented in LTspice

The AC analysis was performed using the following simulation directive:

```
.ac dec 1000 1 20G
```

1.3 Resonance Frequency

The resonance frequency is extracted in LTspice using the following directives:

```
.meas AC max_v MAX mag(V(n001))
.meas AC f_res WHEN mag(V(n001))=max_v
```

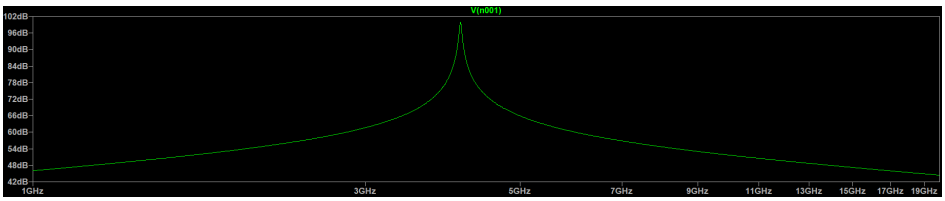

Figure 1.2: Bode diagram of the circuit showing the resonance frequency

The simulated resonance frequency was found to be $f_r = 4.109\,\text{Hz}$ as shown in Figure 1.2, which is in excellent agreement with the analytical prediction. The amplitude value associated with the resonance frequency is found to be $V = 9.998 \times 10^1 \text{kV}$. The impedance Z of the circuit can be calculated as the ratio of the voltage V across the circuit to the current $I = 1\text{A}$ supplied by the source:

$$Z = \frac{V}{I} = 99.98 \text{ k}\Omega \tag{1.3}$$

Since the impedance at resonance is equal to the resistance R in a parallel RLC circuit, the simulated impedance value of $Z \approx 99.98$ kΩ is consistent with the expected value of $R = 1.00 \times 10^2 \text{k}\Omega$.

1.4 Bandwidth

The bandwidth of the resonance can be determined by finding the frequencies at which the voltage drops to approximately 70.7% of the maximum value, which corresponds to the -3 dB points of the resonance curve.

In order to find these frequencies, the following directives were used:

```
.meas AC v_3db PARAM max_v*0.707
.meas AC f_low WHEN mag(V(n001))=v_3db RISE=1
.meas AC f_high WHEN mag(V(n001))=v_3db FALL=1
```

The results indicate that the lower and upper -3 dB frequencies are approximately $f_1 \approx 4.093$GHz and $f_2 \approx 4.125$GHz, respectively.

The bandwidth is then calculated as

$$\Delta f = f_2 - f_1 \approx 31.8 \text{ MHz} \tag{1.4}$$

1.5 Quality Factor

Using the calculated values in LTSpice of the resonance frequency and the bandwidth, the quality factor can be estimated as

$$Q = \frac{f_R}{\Delta f} = 128.809 \tag{1.5}$$

This value is in very good agreement with the analytical prediction of $Q = 128$, confirming the consistency between the theoretical analysis and the simulation results.

2. Analysis of RLC parallel circuit changing the R, L and C values

We analyzed the RLC parallel circuit showed in figure 1.1 by changing the values of R, L and C within 6 configurations as following:

	L (nH)	R (kΩ)	C (fF)
[A]	30	200	50
[B]	30	50	50
[C]	60	100	50
[D]	15	100	50
[E]	30	100	100
[F]	30	100	25

Table 2.1: Values of L, R and C for different cases

We measured the resonance frequency f_r and quality factor Q for each configuration using LTSpice and compared them with the analytical results.

	f_r analytical (GHz)	f_r experimental (GHz)	Q analytical	Q experimental
[A]	4.109	4.109	258.198	257.810
[B]	4.109	4.109	64.549	64.521
[C]	2.905	2.906	91.287	91.233
[D]	5.811	5.811	182.574	182.432
[E]	2.905	2.906	182.574	182.243
[F]	5.811	5.811	91.287	91.243

Table 2.2: Comparison between analytical and experimental resonance frequency and quality factor

The analytical predictions are consistent with the experimental results.

3. Design an RLC parallel circuit

Using the same RLC circuit as shown in figure 1.1, this time we are given the values of the capacitance, the resonance frequency, and the quality factor that we want from the circuit, reported in Table 3.1.

Parameter	Value
Capacitance C	50 fF
Resonance frequency f_R	5 GHz
Quality factor Q	10^4

Table 3.1: Circuit parameters

3.1 Analytical calculation of R and L

First of all, using the inverse of the analytical formulas from before, it is easy to calculate the physical values of the resistance and inductance of the circuit needed to obtain those f_r and Q.

$$L = \frac{1}{(2\pi f_R)^2 C} = 30.26 \text{ nH} \qquad R = Q\sqrt{\frac{L}{C}} = 6.36 \text{ M}\Omega \tag{3.1}$$

3.2 LTspice simulation

After that, through the LTspice analysis, we see, as expected, the same behavior of the voltage across the resistance as in the first two exercises. Using the same technique and directives, we discover from the simulation the values of f_r and the quality factor.

	f_R analytical (GHz)	f_R experimental (GHz)	Q analytical	Q experimental
Values	5.000	5.0003453	10^4	9838

Table 3.2: Comparison between given data and experimental values of resonance frequency and quality factor

The results obtained closely match the theoretical values. Initially, a noticeable discrepancy was observed due to the coarse frequency step used in the simulation, which led to an underestimation of the calculated quantities. By increasing the number of sweep points from 10,000 to 1,000,000, and consequently improving the frequency resolution, the numerical approximation converged more closely to the theoretical predictions, as evidenced by the updated results.

4. Josephson Junction

4.1 Josephson Junction Simulation

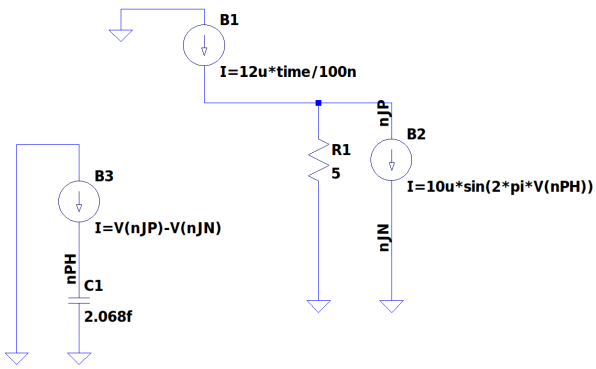

Figure 4.1: Parallel RLC circuit implemented in LTspice

The circuit shown in Figure 4.1 models a Josephson junction using a parallel RLC configuration. The left branch, composed of the controlled source $B3$ and the capacitor $C1$, has the role of generating the model of the phase evolution across the junction. The source $B2$ models the Josephson supercurrent $I_s = I_c \sin(\phi)$, while $R1$ represents the normal resistive channel of the junction. Finally, $B1$ provides a time-dependent bias current that drives the junction.

4.2 AC Josephson Effect

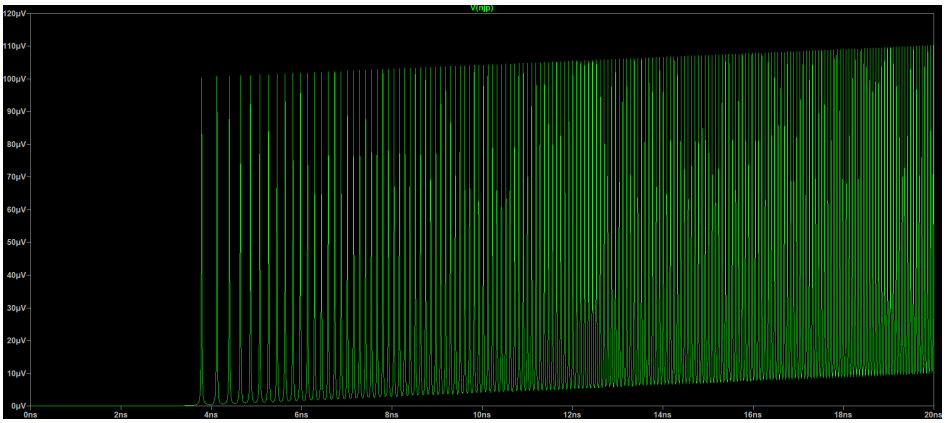

Figure 4.2: Voltage across the junction showing the AC Josephson effect.

The voltage across the junction, as shown in Figure 4.2, exhibits a series of peaks that correspond to the AC Josephson effect. As the bias current exceeds the critical current I_c, the junction transitions into a voltage state where the phase evolves in time, leading to oscillations in the voltage. The time intervals between the peaks decrease as the bias current increases, which is consistent with the Joseph voltage–frequency relation, where the frequency of oscillation is proportional to the voltage across the junction.

4.3 Time analysis of the peaks

Peak	Time (ns)
peak 1	83.785
peak 2	84.122
peak 3	84.399
peak 4	84.643
peak 5	84.866

Table 4.1: Peak times

Interval	Δt (ns)
$1 \to 2$	0.337
$2 \to 3$	0.277
$3 \to 4$	0.244
$4 \to 5$	0.223

Table 4.2: Time differences between peaks

From the peak times reported in Table **??**, we observe that the time interval between consecutive peaks decreases slightly, meaning that the peaks become progressively closer in time. This behavior is expected because once the bias current exceeds the critical current ($I_c = 10\mu$A), the junction enters the voltage state and the phase evolves according to the Josephson voltage–frequency relation

$$f = \frac{2e}{h} V.$$

As the bias current increases, the mean value of voltage across the junction also increases due to the resistive branch of the model, and this can be observed in the ascending pattern of the voltage peaks.

5. Analysis of the circuit

5.1 Transmission line coupled to the qubit and readout resonator

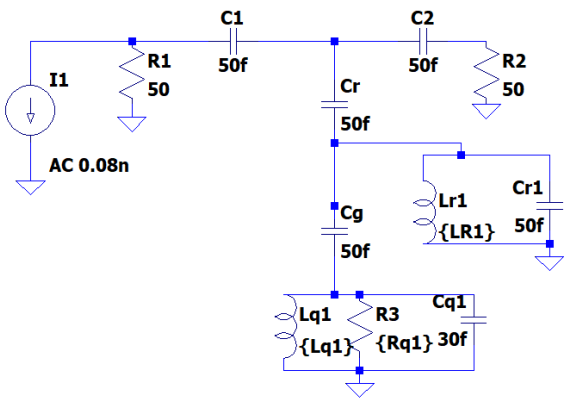

Figure 5.1: Transmission line coupled to the qubit and readout resonator implemented in LTspice.

The circuit shown in Fig. 5.1 is analyzed for three different values of the qubit inductance, namely $L_{q1} = 20.45$nH, 23.45nH, and 26.45nH, in order to evaluate its impact on the system response.

5.2 Resonance peaks

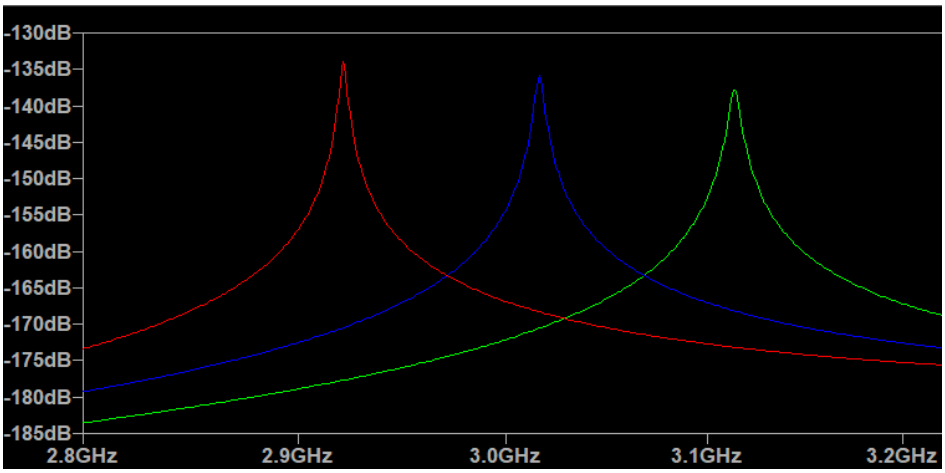

Figure 5.2: Resonance peaks for different values of the qubit inductance.

From the Bode plot in Fig. 5.2, it is observed that the position of the resonance peak of the qubit varies with the inductance. This behavior is consistent with the dependence of the resonance frequency on the LC parameters of the qubit, according to

$$f_q = \frac{1}{2\pi\sqrt{L_q C_q}}. \tag{5.1}$$

The extracted peak frequencies are reported in the following table:

Step	f_{peak} (Hz)
1	3.113×10^9
2	3.016×10^9
3	2.921×10^9

Table 5.1: Peak frequencies for different values of the qubit inductance.

The results show a clear shift of the resonance frequency as the qubit inductance is modified.

This variation of L_q effectively models the action of the flux line, which tunes the qubit frequency by modifying its effective Josephson inductance, allowing controlled shifts of the resonance.

6. Design of the Qubit Characteristic

6.1 Circuit design

We designed the circuit depicted in figure 5.1 so that the resonance frequency of the resonator f_r sweeps the range from 6GHz to 11GHz with 250MHz steps: to do so we used the analitical formula for the resonance frequency and found the values of $Lr1$ for each frequency. The two edges values of $Lr1$ are $14.072nH$ and $4.187nH$ for $f_r = 6GHz$ and $f_r = 11GHz$ respectively. Concerning the Qubit, we calculated the value of $Lq1$ to be $23.45nH$ to have a resonance frequency of $f_q = 6GHz$, while the value of $Rq1$ is set to $8.841M\Omega$ to have a quality factor of $Q = 10^4$.

6.2 Analysis of the simulation

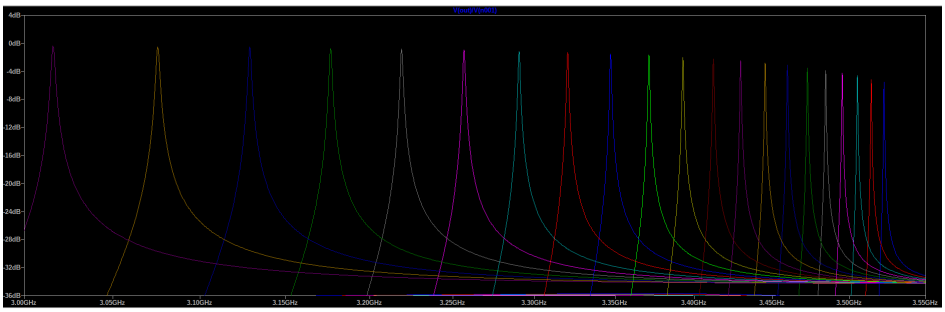

Figure 6.1: Transfer function with given parameters.

The Bode diagram in figure 6.1 shows the tranfer function $S = \frac{V_{out}}{V_{in}}$ where V_{out} is the voltage across $R2$ and V_{in} is the voltage across $R1$. The different resonance frequencies obtained correspond to the different values of $Lr1$ and so to the different values of f_r.

6.3 Coupled Regime

When f_r is tuned close to the qubit frequency f_q ($\Delta = f_r - f_q \approx 0$), the system enters the strong coupling regime. In this situation, that corresponds to the resonance observed at ≈ 3.01GHz in the diagram, the qubit and the resonator undergo **hybridization**. Here, we observe a lower quality factor of the system (the peak has a wider bandwidth) due to the fact that the resonator and the qubit are strongly coupled, and the energy can be efficiently exchanged between them, resulting in a dissipation of energy through

the resistance $Rq1$, causing the system to deviate from the high-Q characteristics of an uncoupled, ideal resonator. However, in such lower frequencies, the impedance of Cg is higher, so the input signal is less affected by the dissipative element of the qubit, resulting in a higher gain ($\approx 0db$).

6.4 Dispersive Regime

When instead f_r is significantly detuned from f_q ($|\Delta| \gg g$, where g is the coupling strength between the qubit and the resonator), the system operates in the **dispersive regime**. In the diagram, this corresponds to the peak located at approximately $3.52GHz$. In this regime, the energy exchange between the qubit and the resonator is suppressed, and the resonator is decoupled from the qubit. As a result, the resonator behaves more like an ideal one, contributing to a higher quality factor (narrower peaks) of the system. On the other hand, the input signal is more attenuated (negative gain) due to the lower impedance of Cg, which allows more power to be dissipated through the resistance $Rq1$. However, the qubit's state will still affect the resonator's resonance frequency through a dispersive shift $\chi = \frac{g^2}{\Delta}$. In fact, by fixing the inductance L_{r1} and varying the qubit's parameters (and thus f_q), a measurable shift in the resonant peak f_r is observed. This shift allows the determination of the qubit's state by monitoring the transmission spectrum of the coupled resonator.

6.5 Role of the Quality factor Q

The quality factor Q of the qubit, has a significant impact on the system's response: a higher Q, which means a higher $Rq1$, results in a less power dissipated through the qubit due to the shunted configuration with the input signal, as depicted in figure 6.2, where in this case we can observe that all the peaks have a gain of $\approx 0db$. Moreover, a higher Q will lead to a narrower resonance peaks in the resonator's response, enhancing its sensitivity to the qubit's state.

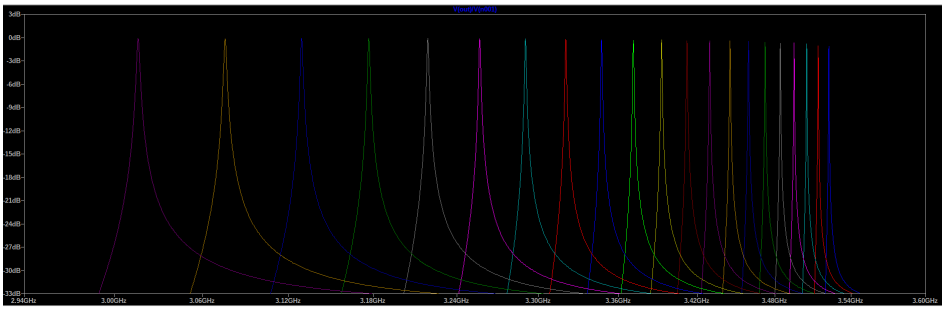

Figure 6.2: Transfer function with $Q \approx 11 * 10^4$

7. Uncertainty

Working on the previous circuit showed in 5.1, we now consider a variation of the capacitance $C_g = 50\text{fF} \pm 5\%$ over 100 samples using a Monte Carlo method.

7.1 Analysis of the simulation

Focussing on the case of $Lr1 = 9.006n\text{H}$ ($f_r = 7.5Ghz$), the resonance frequency of the resonator coupled with the system without any variation of C_g is $f_r = 3.29Ghz$, while inserting uncertainty this nominal value is spreaded over a range of $\approx 120Mhz$ (see 7.1). This spread is far larger than the shift in the resonance frequency due to the qubit's state, which is of the order of $\approx 10MHz$. This points out the importance of the reliabilty of the components and the minimization of the stochastic noise in the sys-

tem.

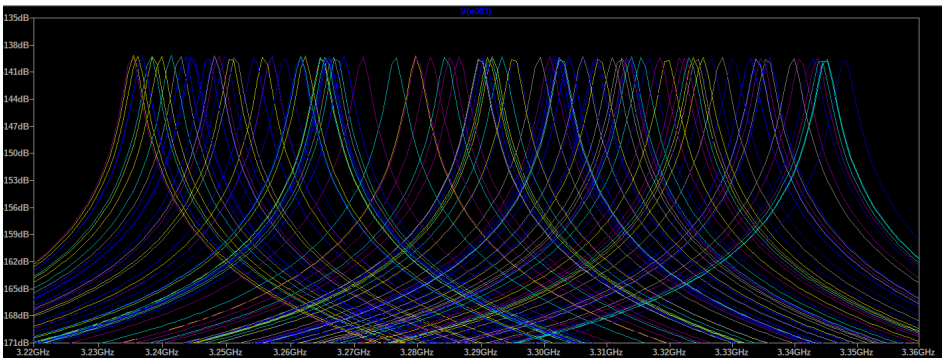

Figure 7.1: Spread of f_r

To mitigate the impact of the uncertainty in C_g, one can lower its nominal value, which will result in a less sensitive frequency shift ($\approx 60MHz$) due to its variation as shown in 7.2.
However, this leads also to a smaller quality factor Q of the resonator and so to a less sharp resonance peak, representing a higher loss-rate $k = \frac{f_r * 2\pi}{Q}$. This introduce a trade-off between the robustness of the system to the uncertainty and the quality of the resonator.

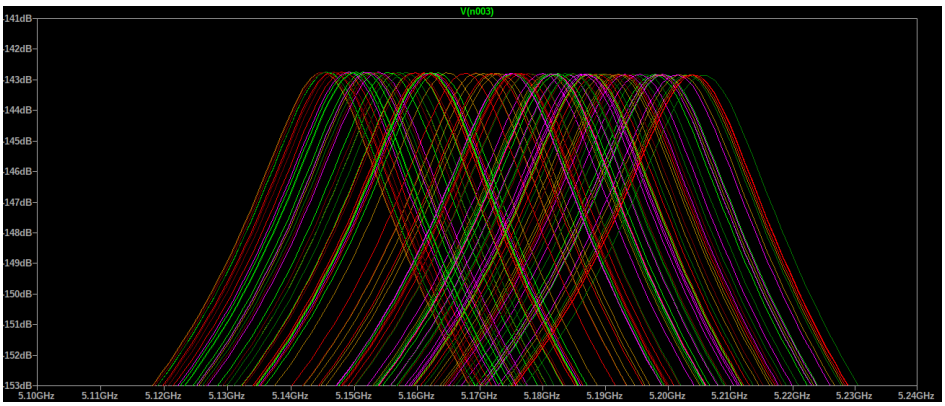

Figure 7.2: Spread of f_r with $C_g = 7$fF