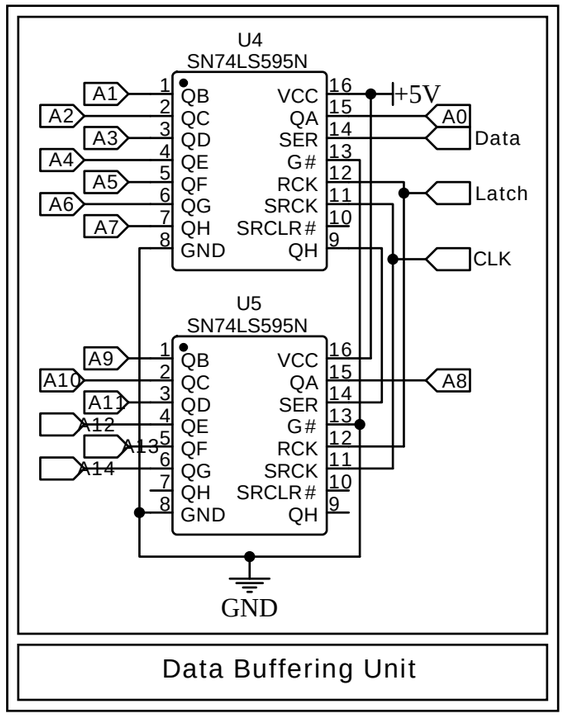

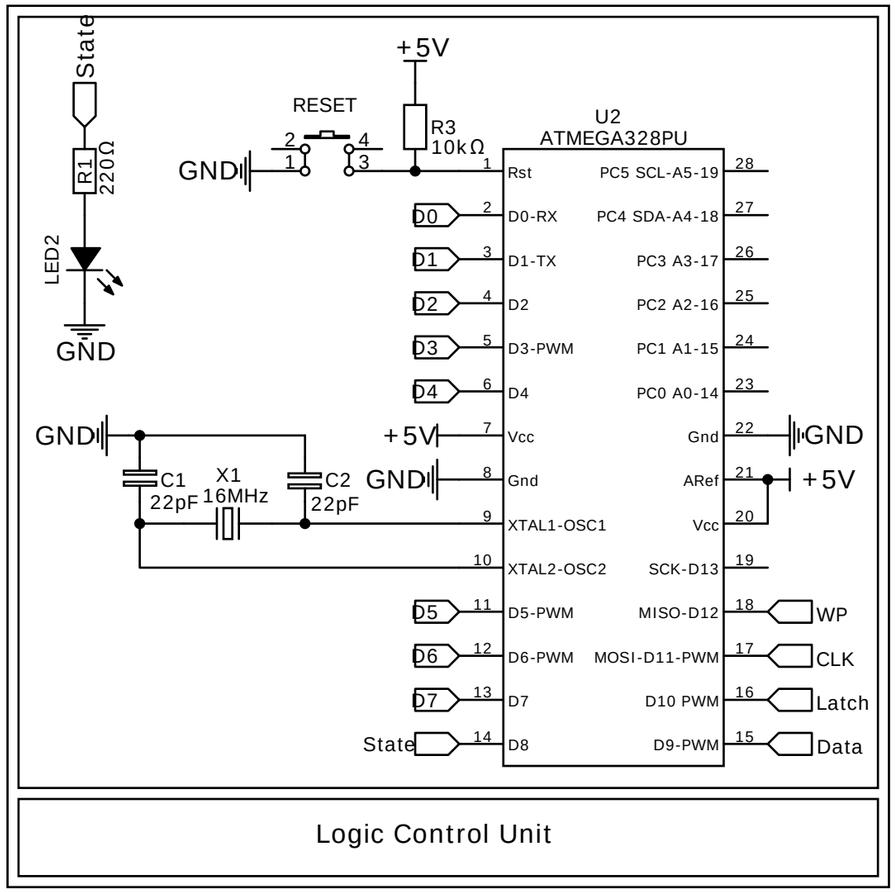

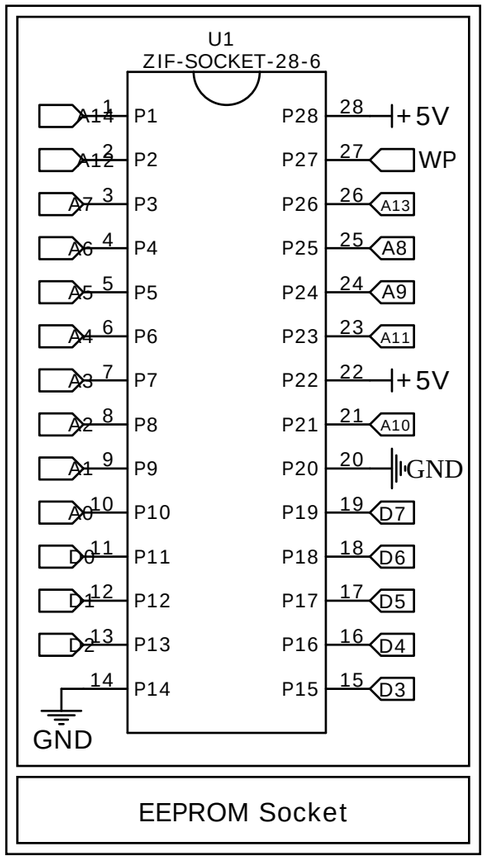

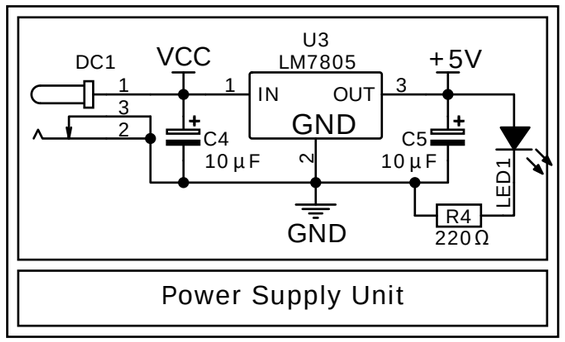

TITLE: AT228C - EEPROM Programmer		REV: 3.1
Ţurică T.	Company: Black Mesa Research Facility	Sheet: 1/1
	Date: 14.05.2024 Drawn By: Tudor S.	