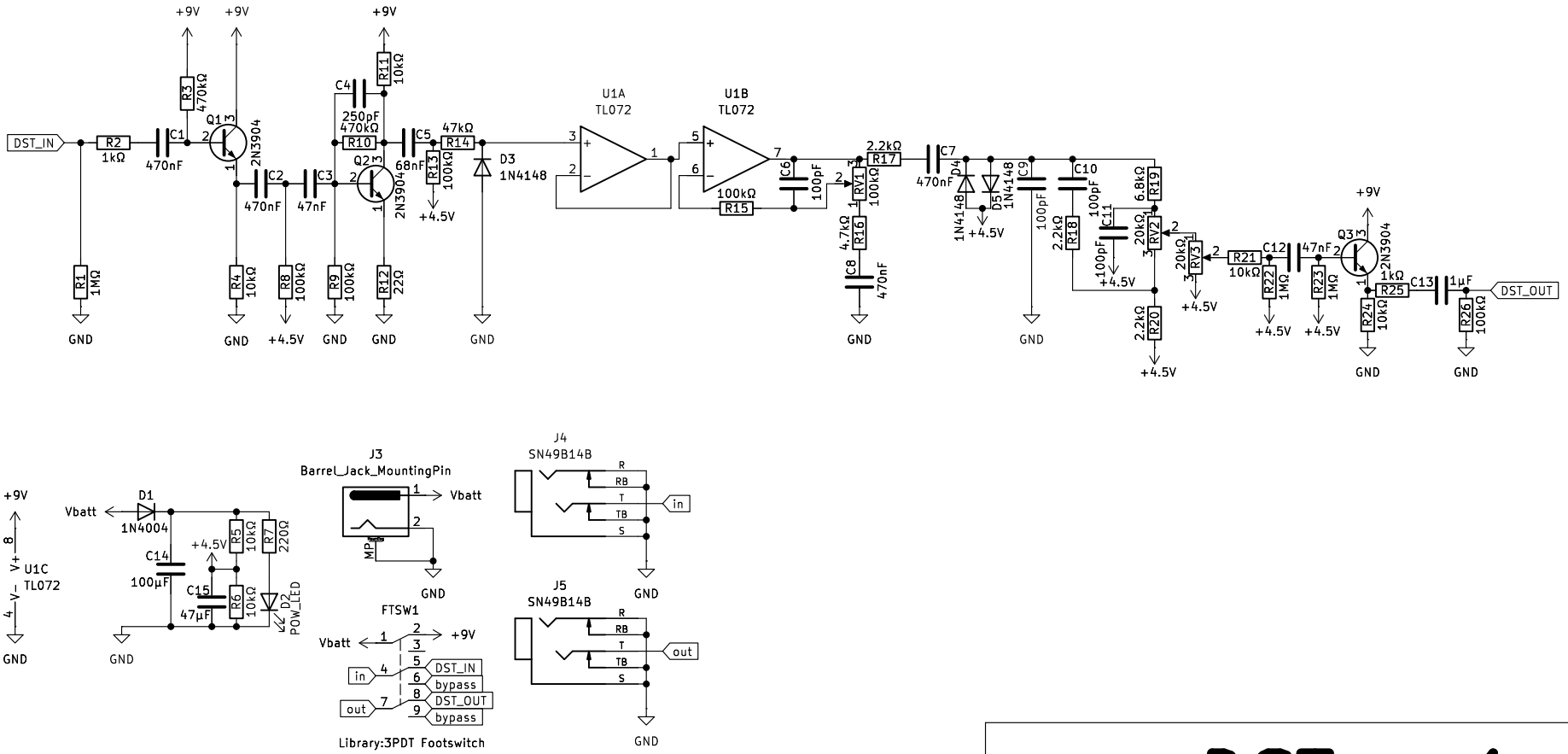

DST – 1

DST – 1 Distortion pedal / BOSS DS-1

Black Mesa Research Facility

Size: A4	Date:	**Rev:**
KiCad E.D.A. 8.0.3		Id: 1/1