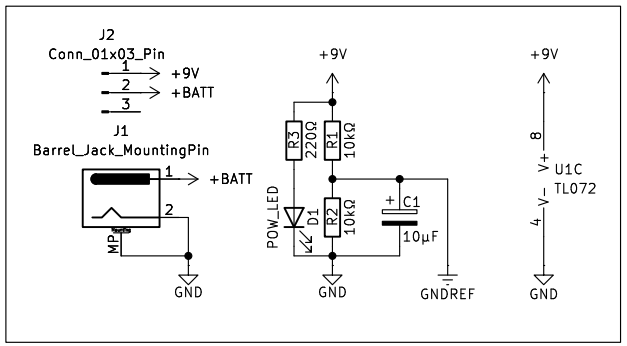

Power supply and virtual ground refference

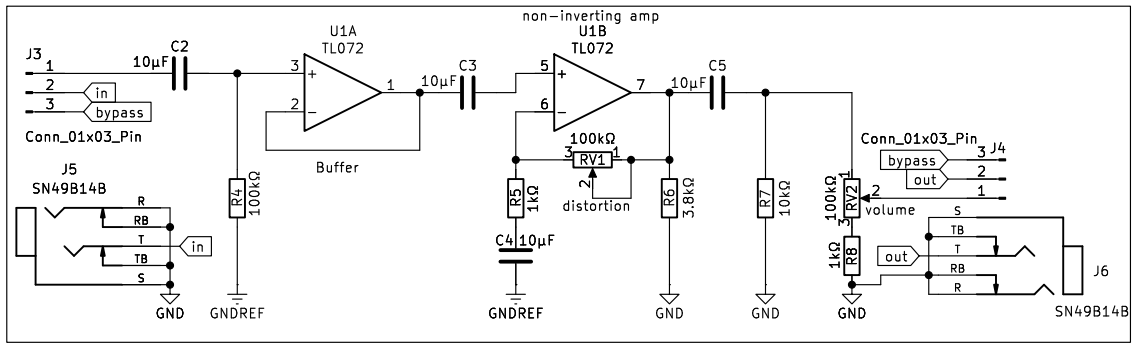

The distortion circuit, basically a buffer and a non−inverting amplifier with a high gain

Sheet: /
File: TDS−2.kicad_sch

Title:

Size: A4	Date:	**Rev:**
KiCad E.D.A. 8.0.3		Id: 1/1