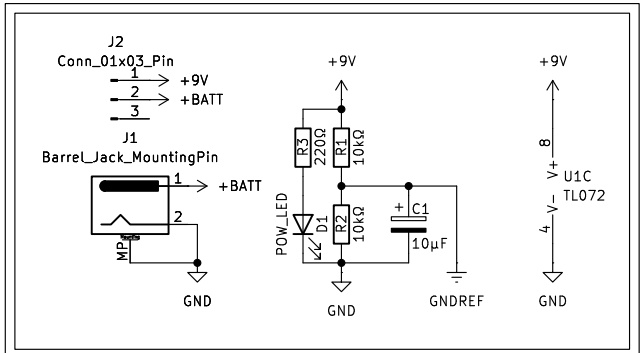

Power supply and virtual ground refference

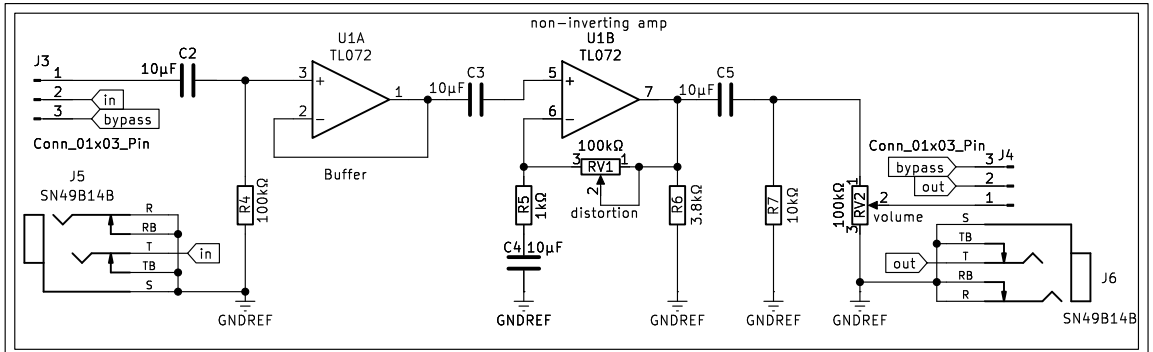

The distortion circuit, basically a buffer and a non−inverting amplifier with a high gain

TDS−2

Guitar distortion pedal

Black Mesa Research Facility

Size: A4	Date:	**Rev:**
KiCad E.D.A. 8.0.3		Id: 1/1