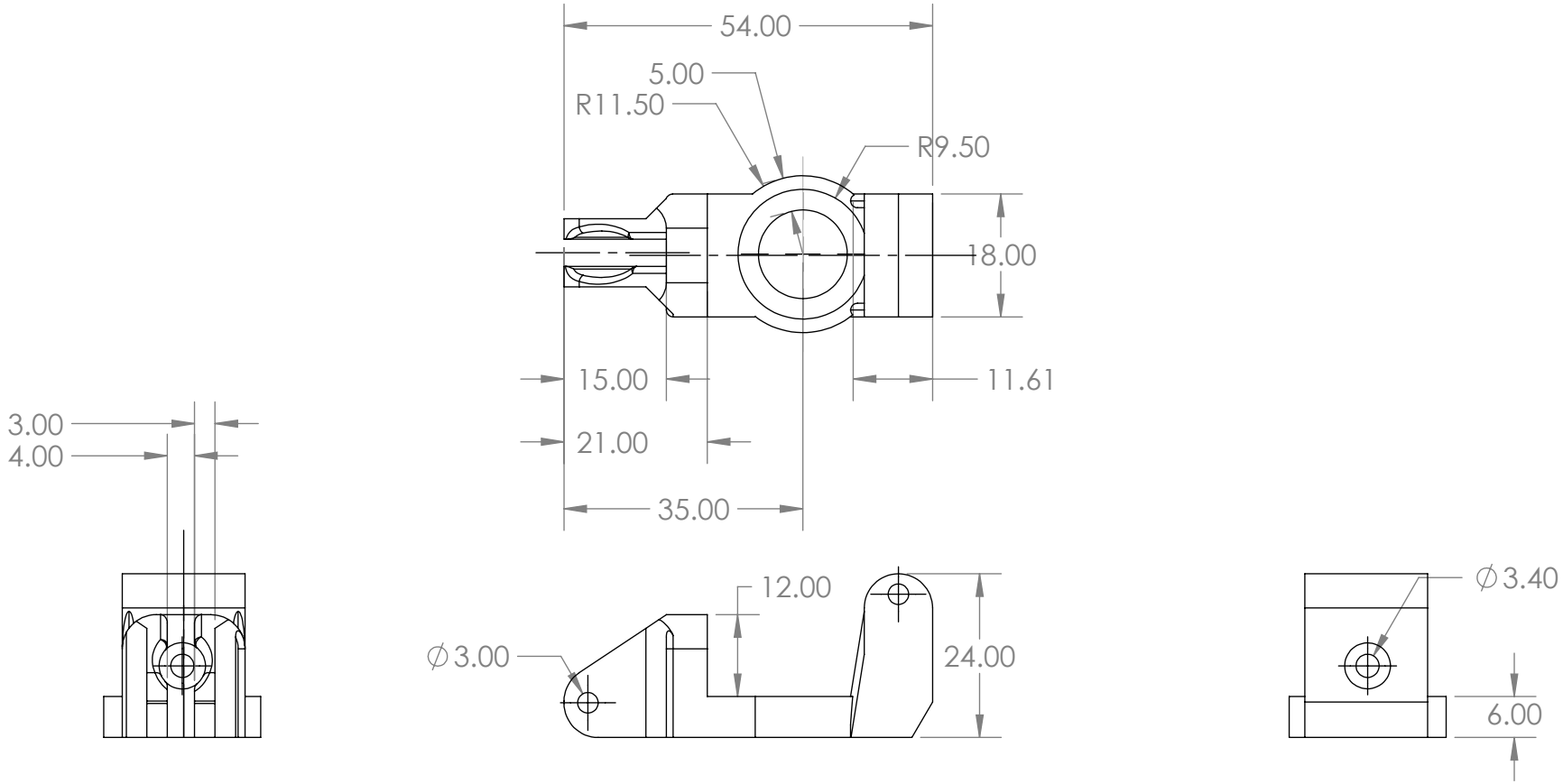

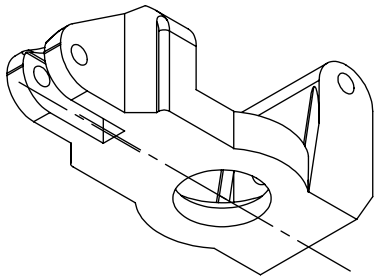

UNLESS OTHERWISE SPECIFIED: DIMENSIONS ARE IN MILLIMETERS SURFACE FINISH: TOLERANCES: LINEAR: ANGULAR:	FINISH: DEBURR AND BREAK SHARP EDGES. FINISH WITH 220 OR FINER SANDPAPER AND RUB SURFACE WITH AN ACETONE IMPREGNATED CLOTH.					DO NOT SCALE DRAWING	REVISION 0
	NAME	SIGNATURE	DATE			TITLE:	
DRAWN	Tudor S.		06	08	2023 13:27	Pivot butuc	
CHK'D							
APPV'D							
MFG							
Q.A			MATERIAL: PLA / PLA+			DWG NO.	A4
			WEIGHT:			SCALE:1:1	SHEET 1 OF 1