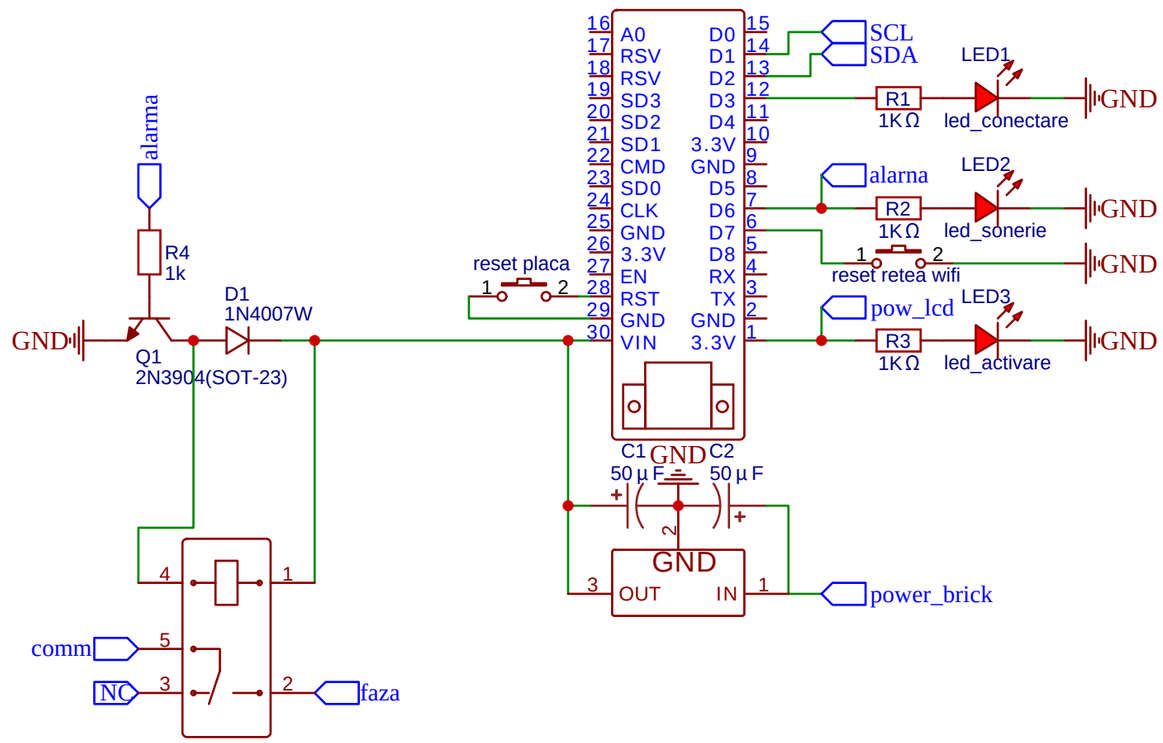

TITLE: Alarminatorul		REV: 1.0
Ţupică T.	Company: Black Mesa Research Facility	Sheet: 1/1
	Date: 01-05-2023 Drawn By: Tudor S.	