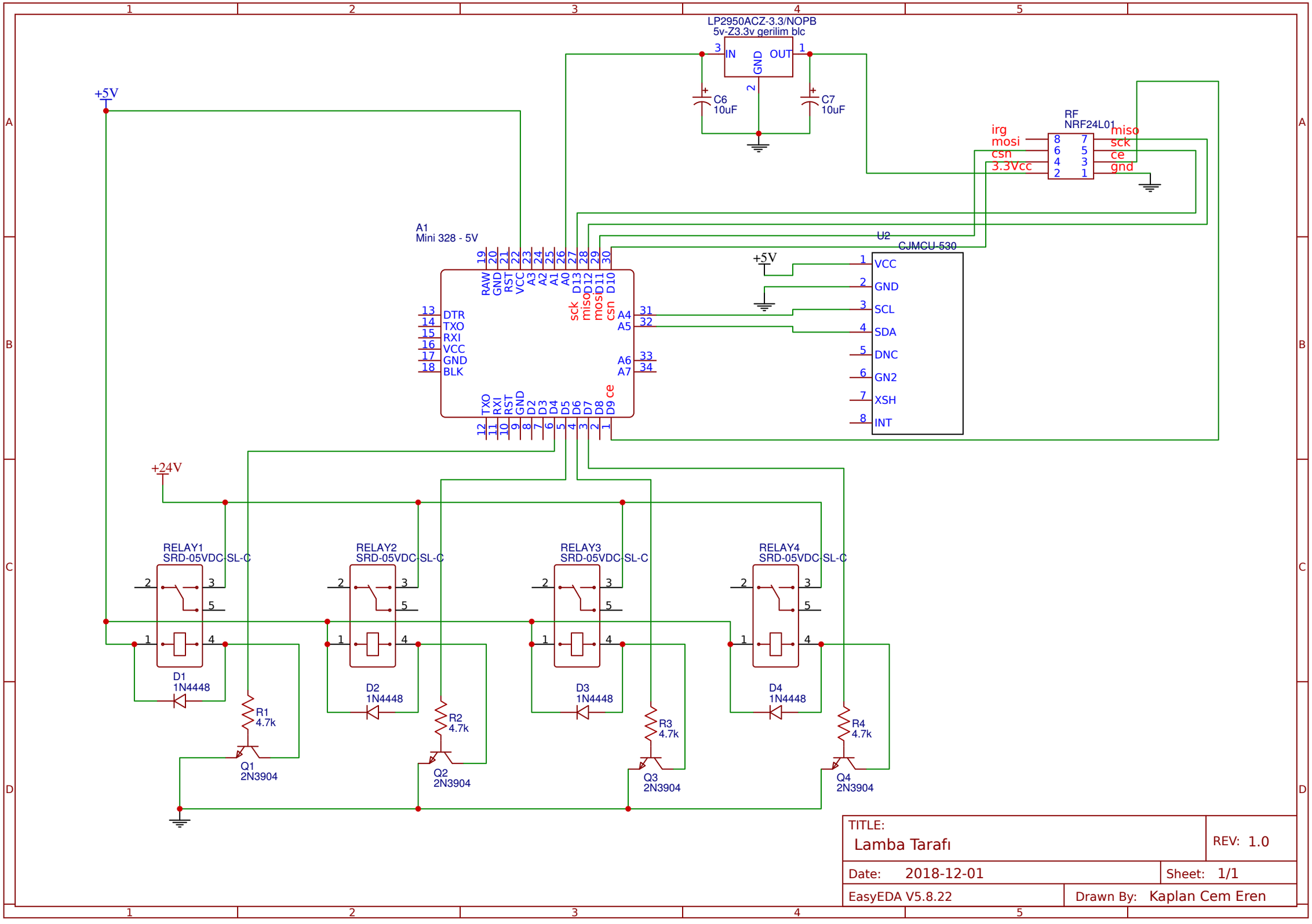

TITLE: Lamba Tarafı	REV: 1.0
Date: 2018-12-01	Sheet: 1/1
EasyEDA V5.8.22	Drawn By: Kaplan Cem Eren