ELECTRONIC BRAKE FOR KINETIC MOTION APPARATUS

VERSION 2.0

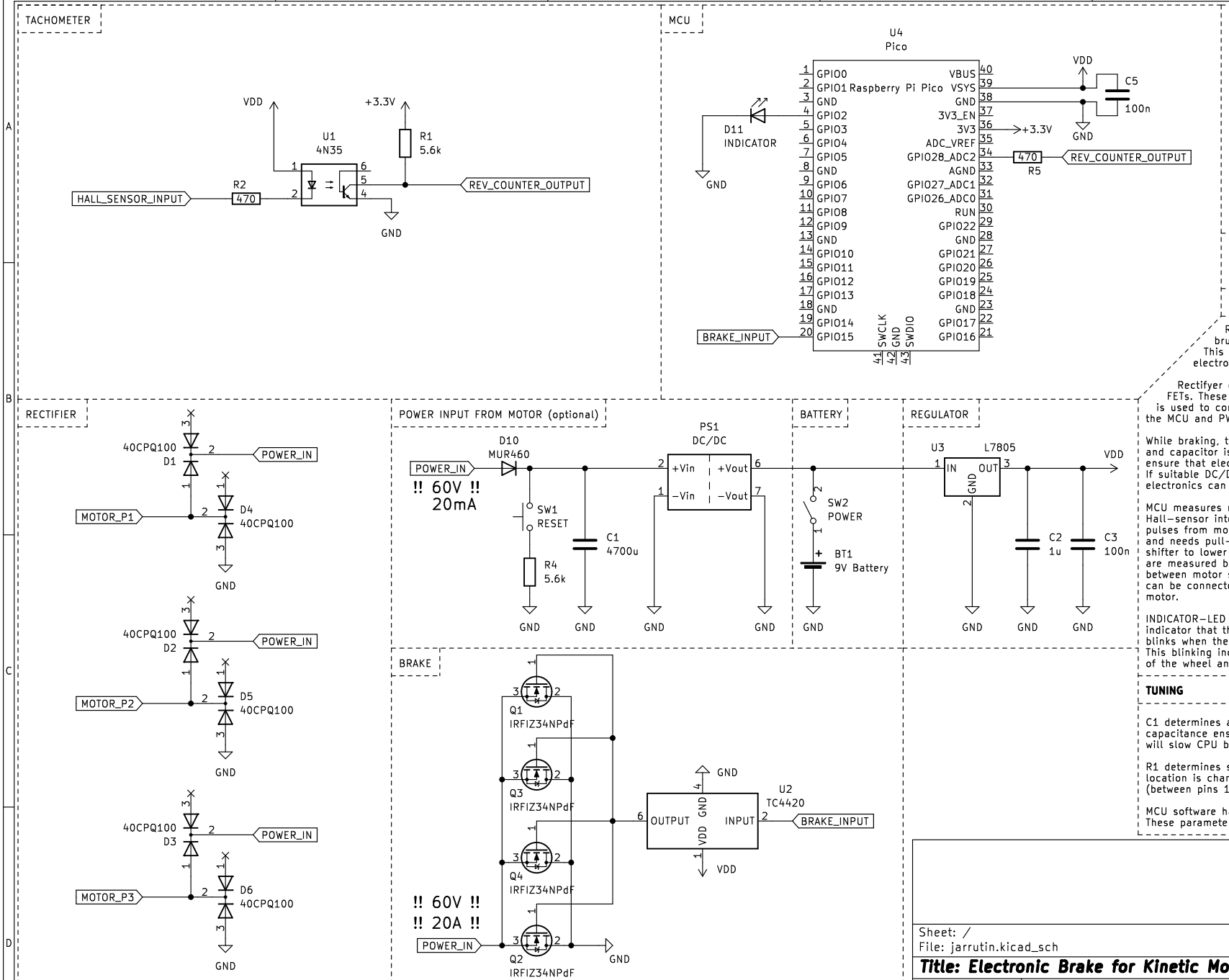

OPERATIONAL DESCRIPTION

Rectifier takes AC−power from 1kW 3−pole brushless motor and makes DC−power (POWER_IN). This power output can be used for powering electronics.

Rectifyer output (POWER_IN) is also connected to brake FETs. These short motor coils via the rectifyer. PWM−signal is used to control the brake FET. Signal is generated by the MCU and PWM duty−cycle determines the braking power.

While braking, the motor does not produce energy. Diode and capacitor is added in front of DC/DC converter to ensure that electronics have sufficient power while braking. If suitable DC/DC converter is not available, control electronics can also be powered from 9V battery.

MCU measures motor speed, to determine when to apply brake. Hall−sensor integrated into the motor is used to measure pulses from motor revolution. Hall−sensor is open−collector and needs pull−up resistor. Opto−coupler is used as level−shifter to lower the voltage to 3.3V. Pulses from hall−sensor are measured by the MCU and software determines correlation between motor speed and braking power. HALL_SENSOR_INPUT can be connected to any of the three hall−sensors in the motor.

INDICATOR−LED blinks when MCU starts. This gives visual indicator that the system is operational. This LED also blinks when the tachometer detects a change in sensor. This blinking indicates that the system detects rotation of the wheel and is ready to respond changes in speed.

TUNING

C1 determines amount of power stored while braking. Larger capacitance ensures smoother operation. Too large capacitance will slow CPU boot−up time.

R1 determines sensitivity of the revolution counter. If sensor location is changed, most likely R1 needs adjusting. 7.5kOhm (between pins 1 and 2) is good starting point.

MCU software has parameters for tachometer signal filtering. These parameters can be changed with software update.

Sheet: /		
File: jarrutin.kicad_sch		
Title: Electronic Brake for Kinetic Motion Apparatus		
Size: A4	Date: 2024−01−19	**Rev: 2.0**
KiCad E.D.A. kicad (6.0.7)		Id: 1/1