ELECTRONIC BRAKE FOR KINETIC MOTION APPARATUS

VERSION 1.2

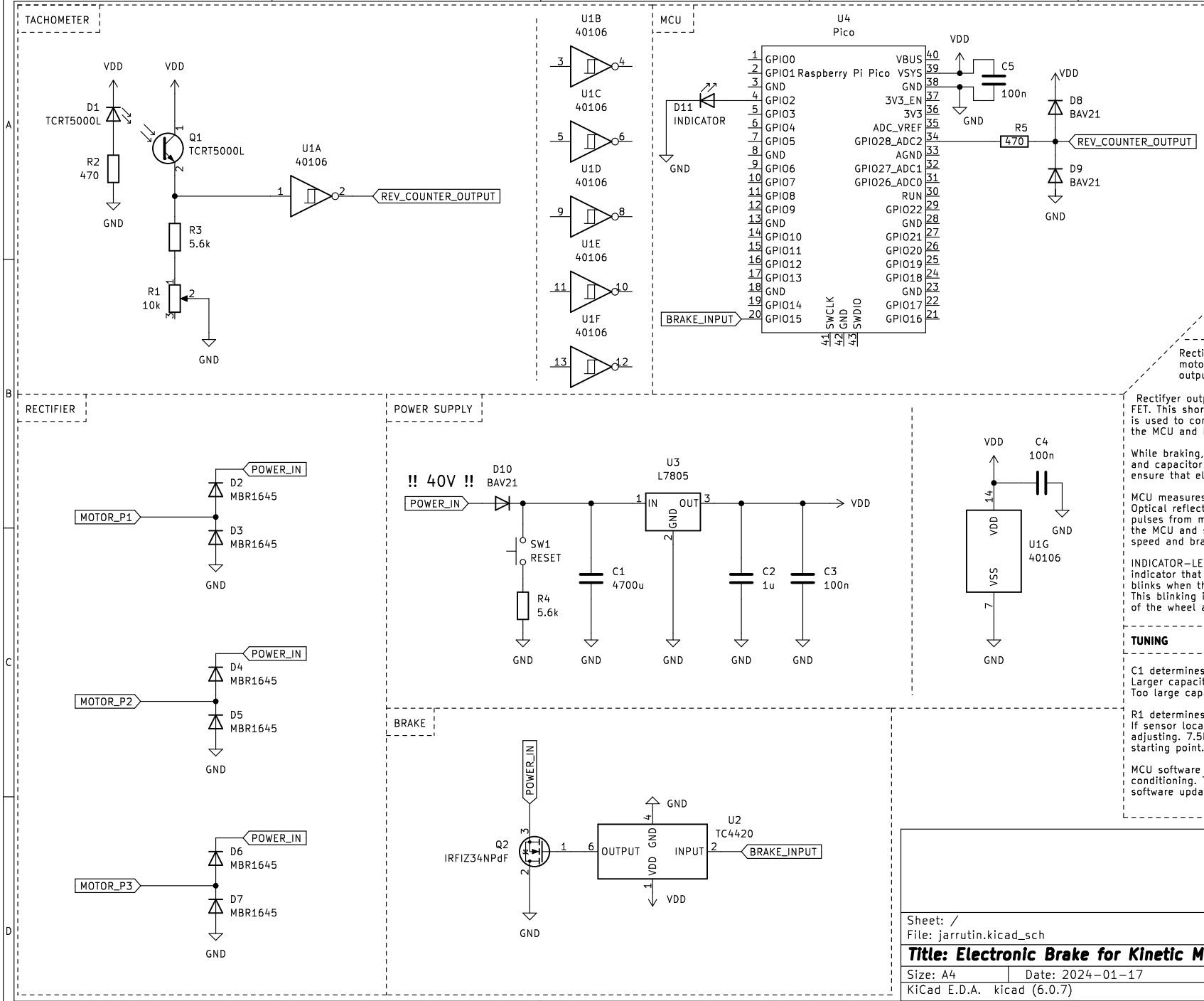

OPERATIONAL DESCRIPTION

Rectifier takes AC-power from 3-pole brushless motor and makes DC-power (POWER_IN). This power output is used for powering electronics.

Rectifyer output (POWER_IN) is also connected to brake FET. This shorts motor coils via the rectifyer. PWM-signal is used to control the brake FET. Signal is generated by the MCU and PWM duty-cycle determines the braking power.

While braking, the motor does not produce energy. Diode and capacitor is added in front of linear regulator to ensure that electronics have sufficient power while braking.

MCU measures motor speed, to determine when to apply brake. Optical reflection based sensor (IR-FET) is used to count pulses from motor revolution. These pulses are measured by the MCU and software determines correlation between motor speed and braking power.

INDICATOR-LED blinks when MCU starts. This gives visual indicator that the system is operational. This LED also blinks when the tachometer detects a change in sensor. This blinking indicates that the system detects rotation of the wheel and is ready to respond changes in speed.

TUNING

C1 determines amount of power stored while braking. Larger capacitance ensures smoother operation. Too large capacitance will slow CPU boot-up time.

R1 determines sensitivity of the revolution counter. If sensor location is changed, most likely R1 needs adjusting. 7.5kOhm (between pins 1 and 2) is good starting point.

MCU software has parameters for tachometer signal conditioning. These parameters can be changed with software update.

Sheet: /
File: jarrutin.kicad_sch

Title: Electronic Brake for Kinetic Motion Apparatus

Size: A4	Date: 2024-01-17	Rev: 1.2
KiCad E.D.A. kicad (6.0.7)		Id: 1/1