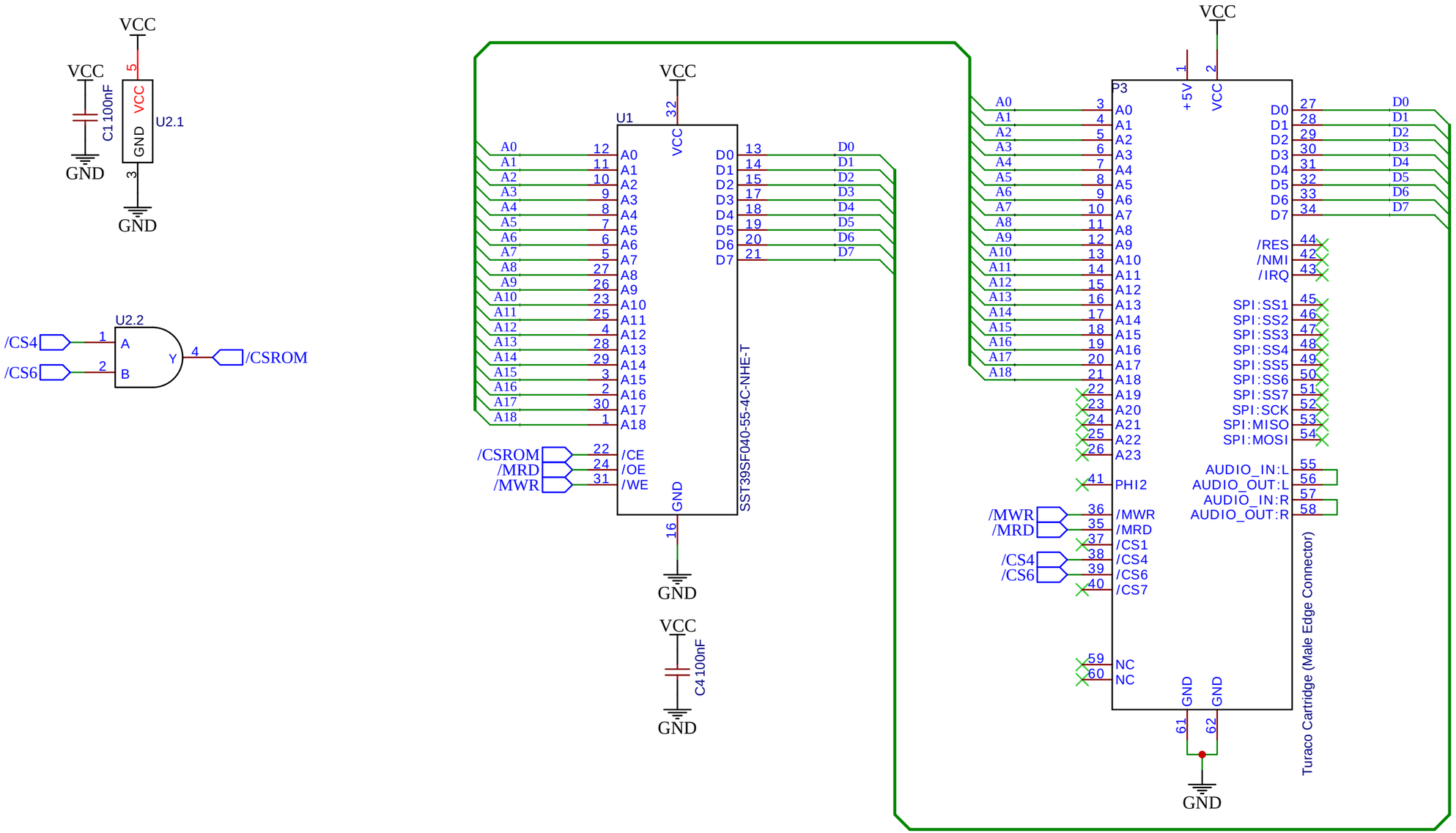

TITLE: Turaco: 512KB Bootable ROM Cartridge		REV: 0.1A
	Company: Studio 8502	Sheet:
	Date: 2023-04-30 Drawn By: Kyle J Cardoza	