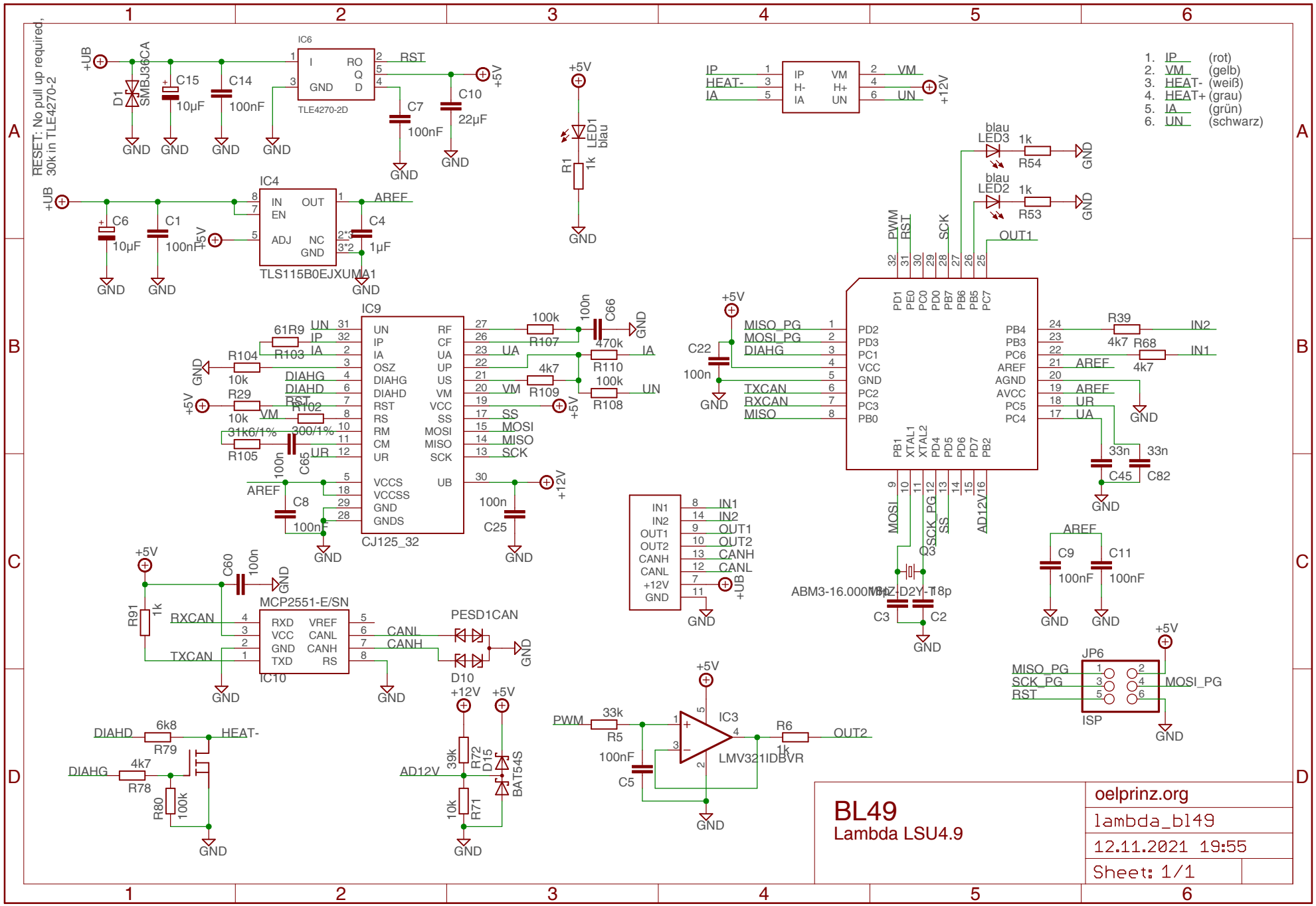
RESET: No pull up required, 30k in TLE4270-2
IC6
TLE4270-2D
IC4
TLS115B0EJXUMA1
IC9
CJ125_32
IC10
MCP2551-E/SN
IC3
LMV321IDBVR
JP6
ISP
ABM3-16.000MHZ-D2Y-T
1. IP (rot)
2. VM (gelb)
3. HEAT- (weiß)
4. HEAT+ (grau)
5. IA (grün)
6. UN (schwarz)
BL49
Lambda LSU4.9
oelprinz.org
lambda_bl49
12.11.2021 19:55
Sheet: 1/1