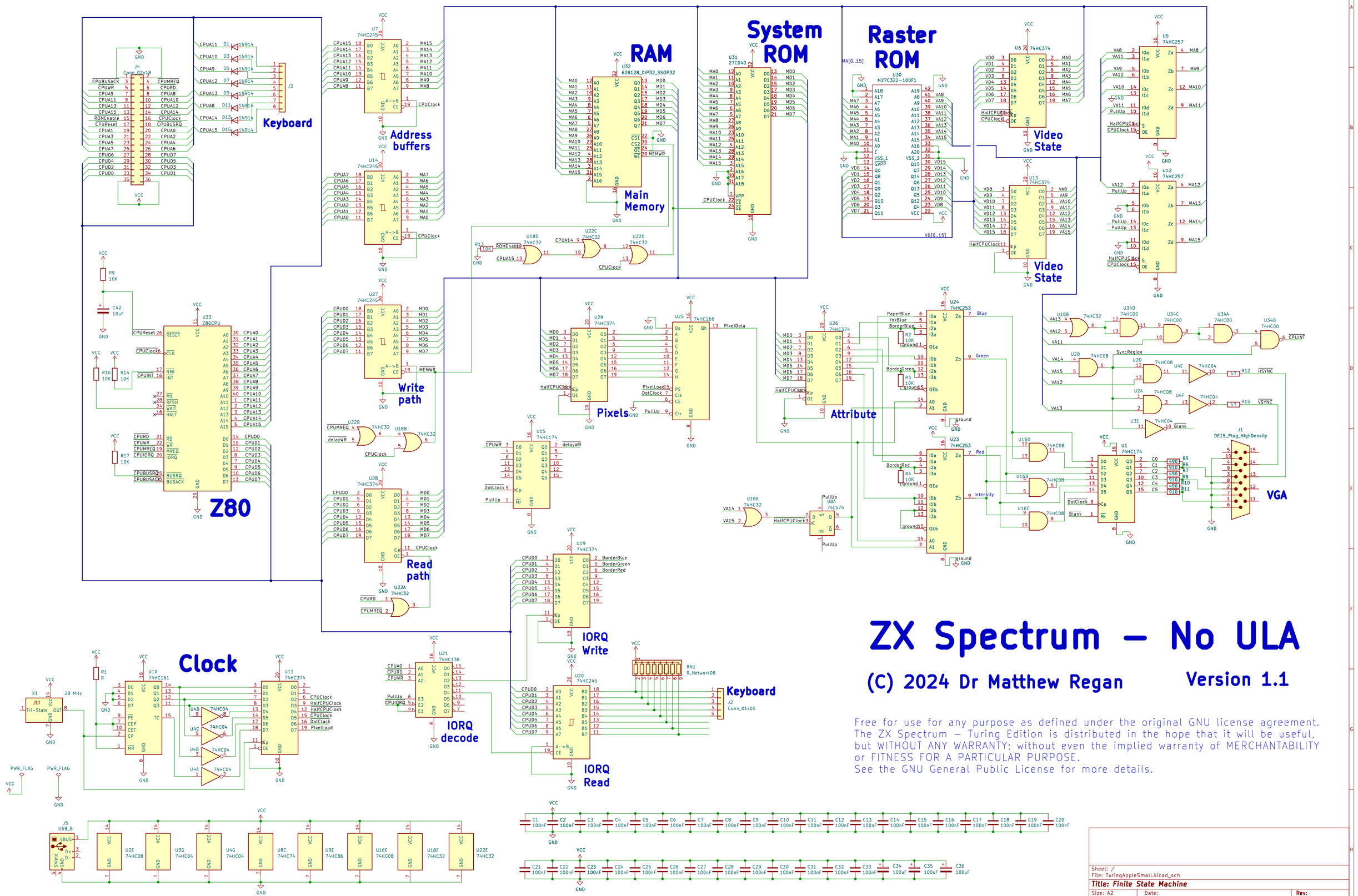

ZX Spectrum – No ULA

(C) 2024 Dr Matthew Regan

Version 1.1

Free for use for any purpose as defined under the original GNU license agreement.
The ZX Spectrum – Turing Edition is distributed in the hope that it will be useful, but WITHOUT ANY WARRANTY; without even the implied warranty of MERCHANTABILITY or FITNESS FOR A PARTICULAR PURPOSE.
See the GNU General Public License for more details.

Sheet: /		
File: TuringAppleSmall.kicad_sch		
Title: Finite State Machine		
Size: A2	Date:	Rev:
KiCad E.D.A. kicad 7.0.1		Id: 1/1