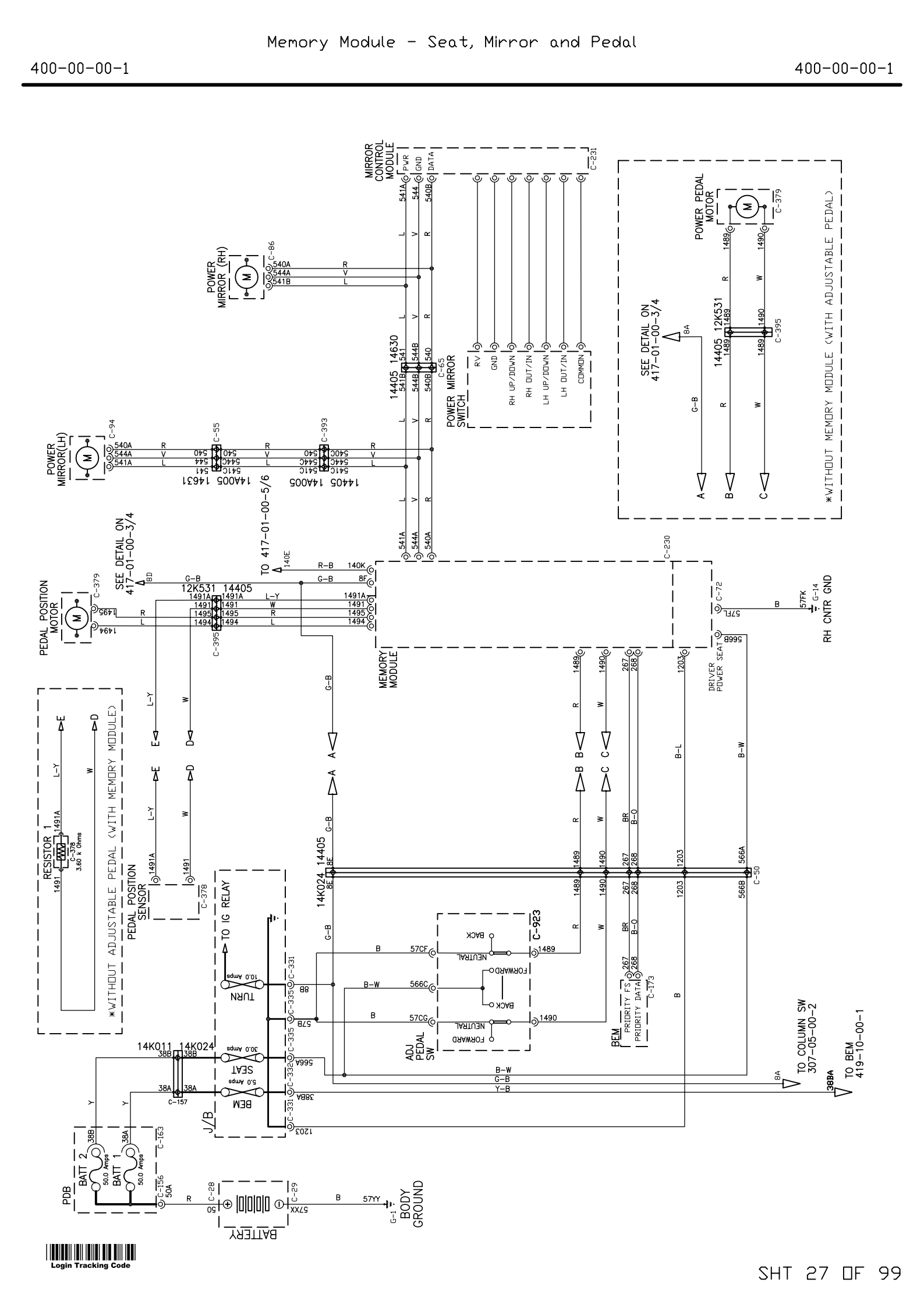

Login Tracking Code

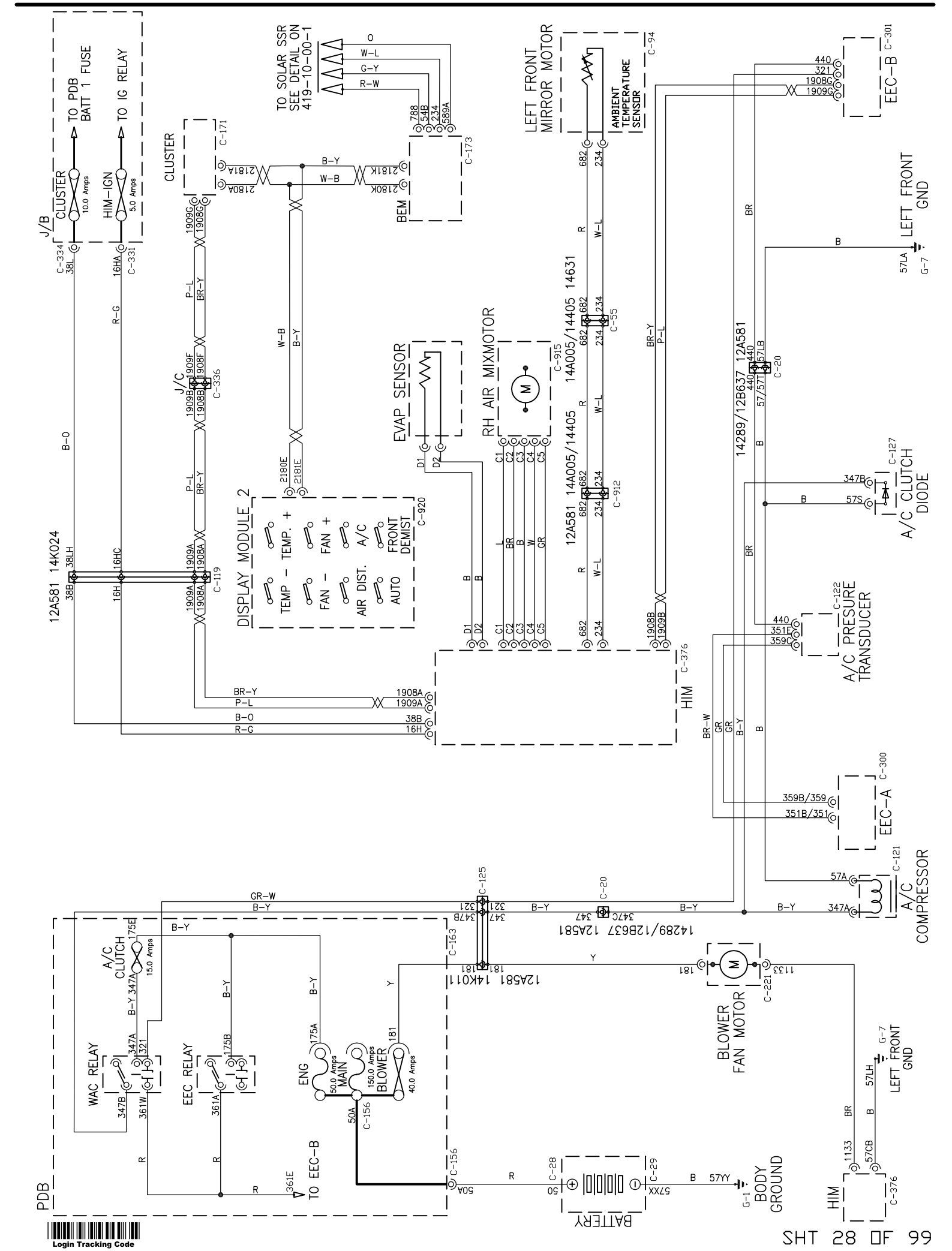
J/B
CLUSTER
10.0 Amps
HIM-IGN
5.0 Amps
TO PDB BATT 1 FUSE
TO IG RELAY
TO SOLAR SSR SEE DETAIL ON 419-10-00-1
CLUSTER
BEM
LEFT FRONT MIRROR MOTOR
AMBIENT TEMPERATURE SENSOR
EEC-B
LEFT FRONT GND
EVAP SENSOR
RH AIR MIXMOTOR
DISPLAY MODULE 2
TEMP - TEMP. +
FAN - FAN +
AIR DIST. A/C
AUTO FRONT DEMIST
12A581 14K024
14A005/14405 14631
14A005/14405
14289/12B637 12A581
A/C CLUTCH DIODE
A/C PRESURE TRANSDUCER
HIM
EEC-A
A/C COMPRESSOR
14289/12B637 12A581
12A581 14K011
BLOWER FAN MOTOR
PDB
A/C CLUTCH
15.0 Amps
WAC RELAY
EEC RELAY
ENG
50.0 Amps
MAIN
150.0 Amps
BLOWER
40.0 Amps
TO EEC-B
BATTERY
BODY GROUND
LEFT FRONT GND
HIM

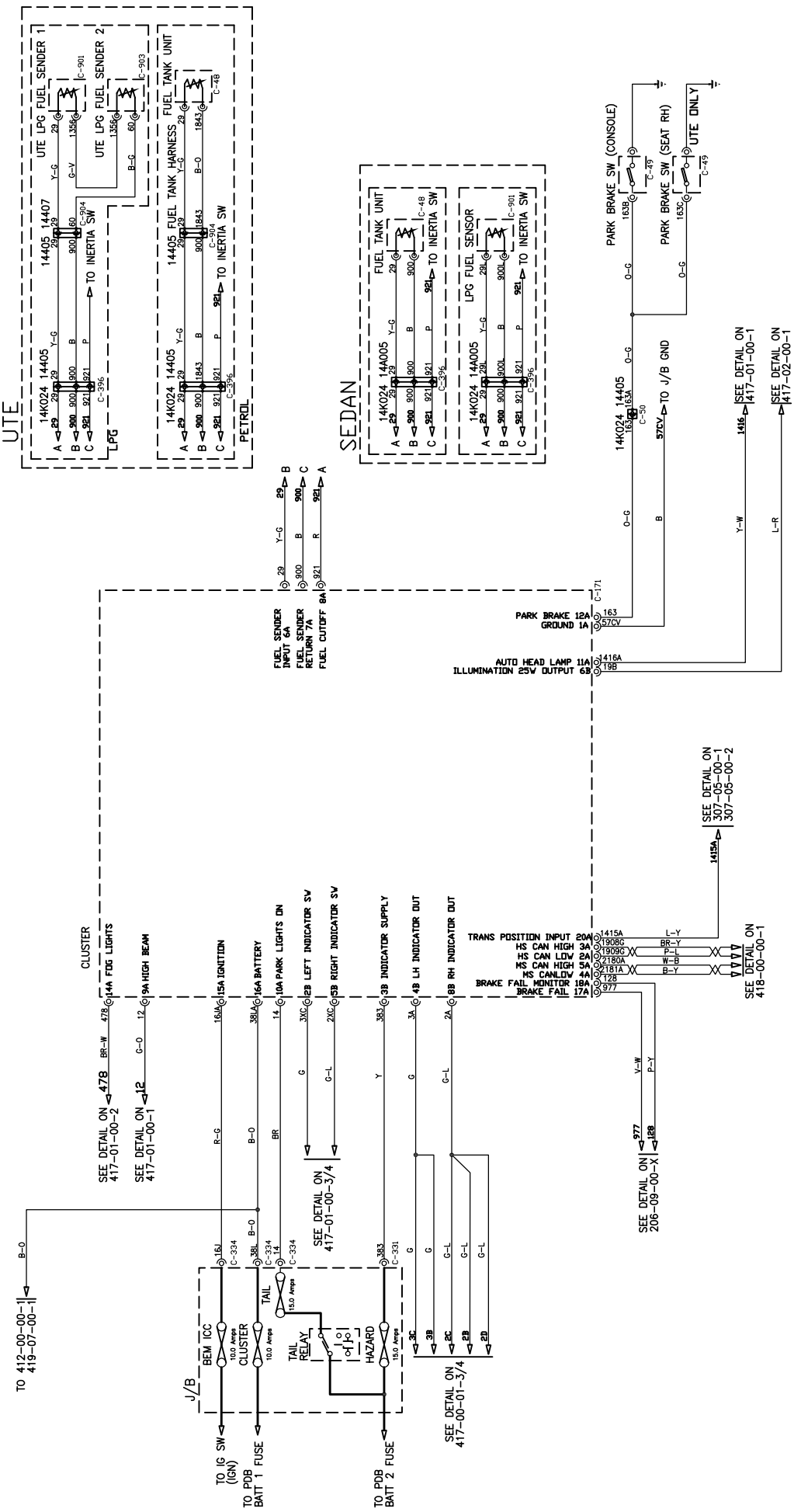
UTE
UTE LPG FUEL SENDER 1
UTE LPG FUEL SENDER 2
FUEL TANK UNIT
FUEL TANK HARNESS
14K024 14405
14405 14407
14405 FUEL TANK UNIT
TO INERTIA SW
LPG
PETROL
SEDAN
FUEL TANK UNIT
LPG FUEL SENSOR
14K024 14A005
PARK BRAKE SW (CONSOLE)
PARK BRAKE SW (SEAT RH)
UTE ONLY
TO J/B GND
SEE DETAIL ON 417-01-00-1
SEE DETAIL ON 417-02-00-1
FUEL SENDER INPUT 6A
FUEL SENDER RETURN 7A
FUEL CUTOFF 9A
PARK BRAKE 12A
GROUND 1A
AUTO HEAD LAMP 11A
ILLUMINATION 25W OUTPUT 6B
CLUSTER
14A FOG LIGHTS
9A HIGH BEAM
15A IGNITION
16A BATTERY
10A PARK LIGHTS ON
2B LEFT INDICATOR SV
5B RIGHT INDICATOR SV
3B INDICATOR SUPPLY
4B LH INDICATOR OUT
8B RH INDICATOR OUT
TRANS POSITION INPUT 20A
HS CAN HIGH 3A
HS CAN LOW 2A
MS CAN HIGH 5A
MS CANLOW 4A
BRAKE FAIL MONITOR 18A
BRAKE FAIL 17A
SEE DETAIL ON 307-05-00-1 307-05-00-2
SEE DETAIL ON 418-00-00-1
SEE DETAIL ON 417-01-00-2
SEE DETAIL ON 417-01-00-1
SEE DETAIL ON 417-01-00-3/4
SEE DETAIL ON 206-09-00-X
SEE DETAIL ON 417-00-01-3/4
TO 412-00-00-1 419-07-00-1
J/B
BEM ICC
CLUSTER
TAIL
TAIL RELAY
HAZARD
TO IG SW (IGN)
TO PDB BATT 1 FUSE
TO PDB BATT 2 FUSE

Cellular Phone

419-08-00-1

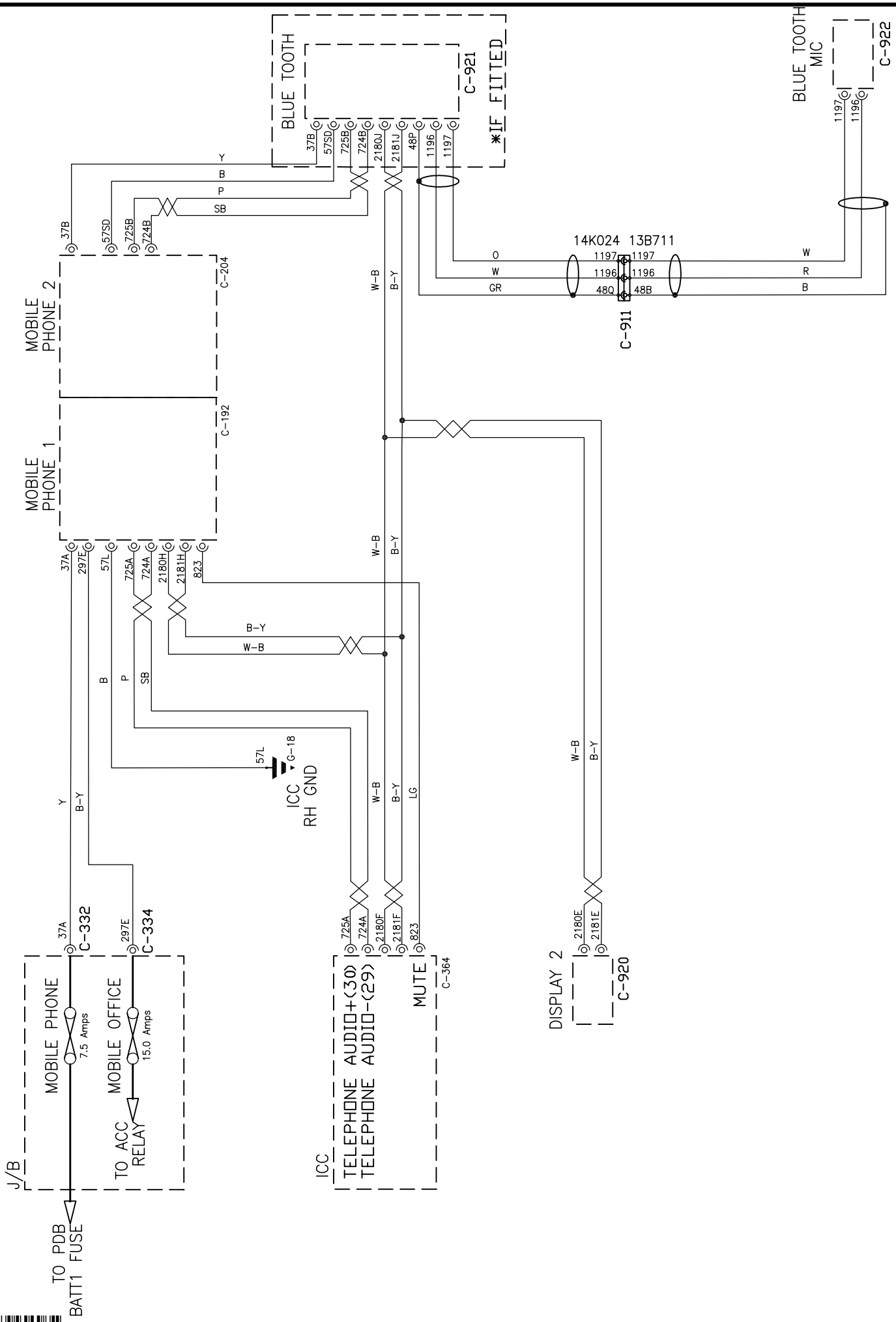

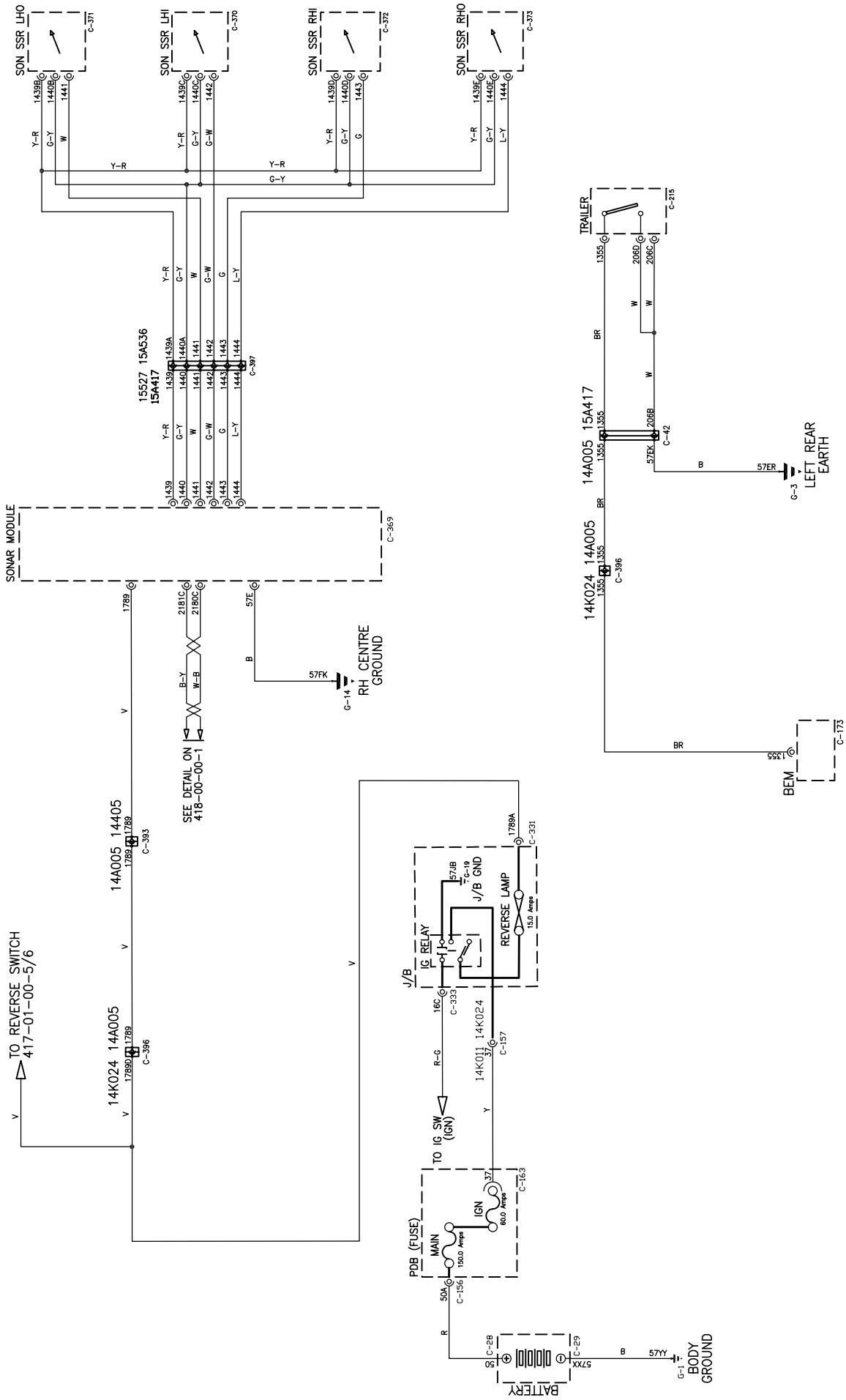
SON SSR LHO
SON SSR LHI
SON SSR RHI
SON SSR RHO
C-371
C-370
C-372
C-373
15527 15A536
15A417
C-397
SONAR MODULE
C-369
TRAILER
C-215
14A005 15A417
C-42
LEFT REAR EARTH
G-3
14K024 14A005
C-396
BEM
C-173
RH CENTRE GROUND
G-14
SEE DETAIL ON 418-00-00-1
14A005 14405
C-393
TO REVERSE SWITCH 417-01-00-5/6
14K024 14A005
J/B
IG RELAY
J/B GND
REVERSE LAMP
15.0 Amps
C-331
C-333
14K011 14K024
C-157
TO IG SW (IGN)
PDB (FUSE)
MAIN
150.0 Amps
IGN
60.0 Amps
C-163
C-156
BATTERY
C-28
C-29
BODY GROUND
G-1

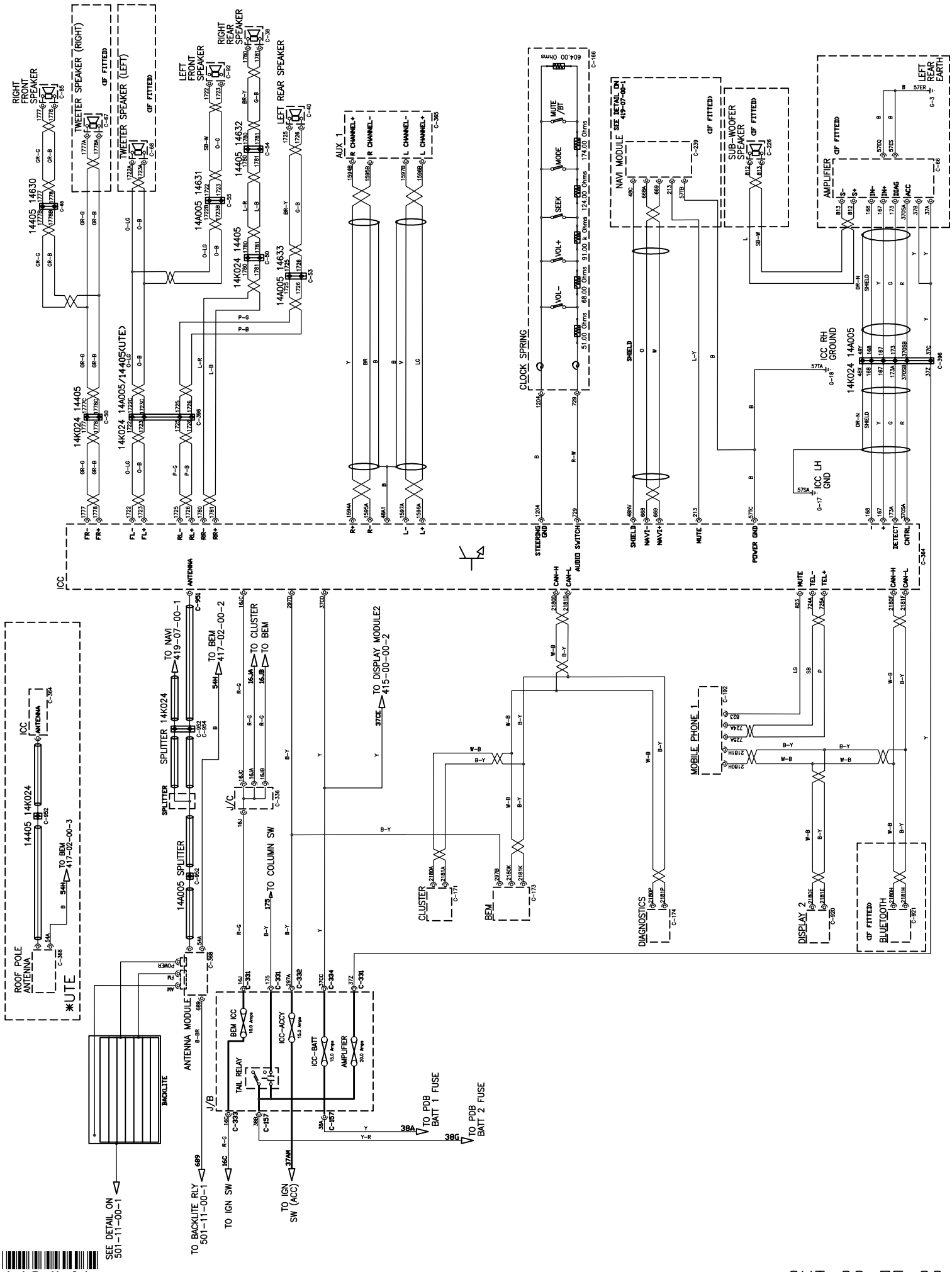
RIGHT FRONT SPEAKER
TWEETER SPEAKER (RIGHT)
TWEETER SPEAKER (LEFT)
(IF FITTED)
LEFT FRONT SPEAKER
RIGHT REAR SPEAKER
LEFT REAR SPEAKER
14405 14630
14A005 14631
14405 14632
14K024 14405
14A005 14633
14K024 14A005/14405(UTE)
AUX 1
R CHANNEL+
R CHANNEL-
L CHANNEL-
L CHANNEL+
CLOCK SPRING
604.00 Ohms
MUTE /BT
MODE
SEEK
VOL+
VOL-
174.00 Ohms
124.00 Ohms
91.00 k Ohms
68.00 Ohms
51.00 Ohms
NAVI MODULE
SEE DETAIL ON 419-07-00-1
SUB-WOOFER SPEAKER
AMPLIFIER
LEFT REAR EARTH
ICC RH GROUND
ICC LH GND
14K024 14A005
ICC
FR- FR+ FL- FL+ RL- RL+ RR- RR+
R+ R- L- L+
STEERING GND
AUDIO SWITCH
SHIELD NAVI- NAVI+ MUTE
POWER GND
DETECT CNTRL
CAN-H CAN-L
TEL- TEL+
TO NAVI 419-07-00-1
TO BEM 417-02-00-2
TO CLUSTER
TO BEM
TO DISPLAY MODULE2 415-00-00-2
SPLITTER 14K024
14A005 SPLITTER
TO COLUMN SW
J/C
ROOF POLE ANTENNA
*UTE
ANTENNA MODULE
BACKLITE
J/B
TAIL RELAY
BEM ICC
ICC-ACCY
ICC-BATT
AMPLIFIER
TO PDB BATT 1 FUSE
TO PDB BATT 2 FUSE
CLUSTER
BEM
DIAGNOSTICS
MOBILE PHONE 1
DISPLAY 2
BLUETOOTH
SEE DETAIL ON 501-11-00-1
TO BACKLITE RLY 501-11-00-1
TO IGN SW
TO IGN SW (ACC)

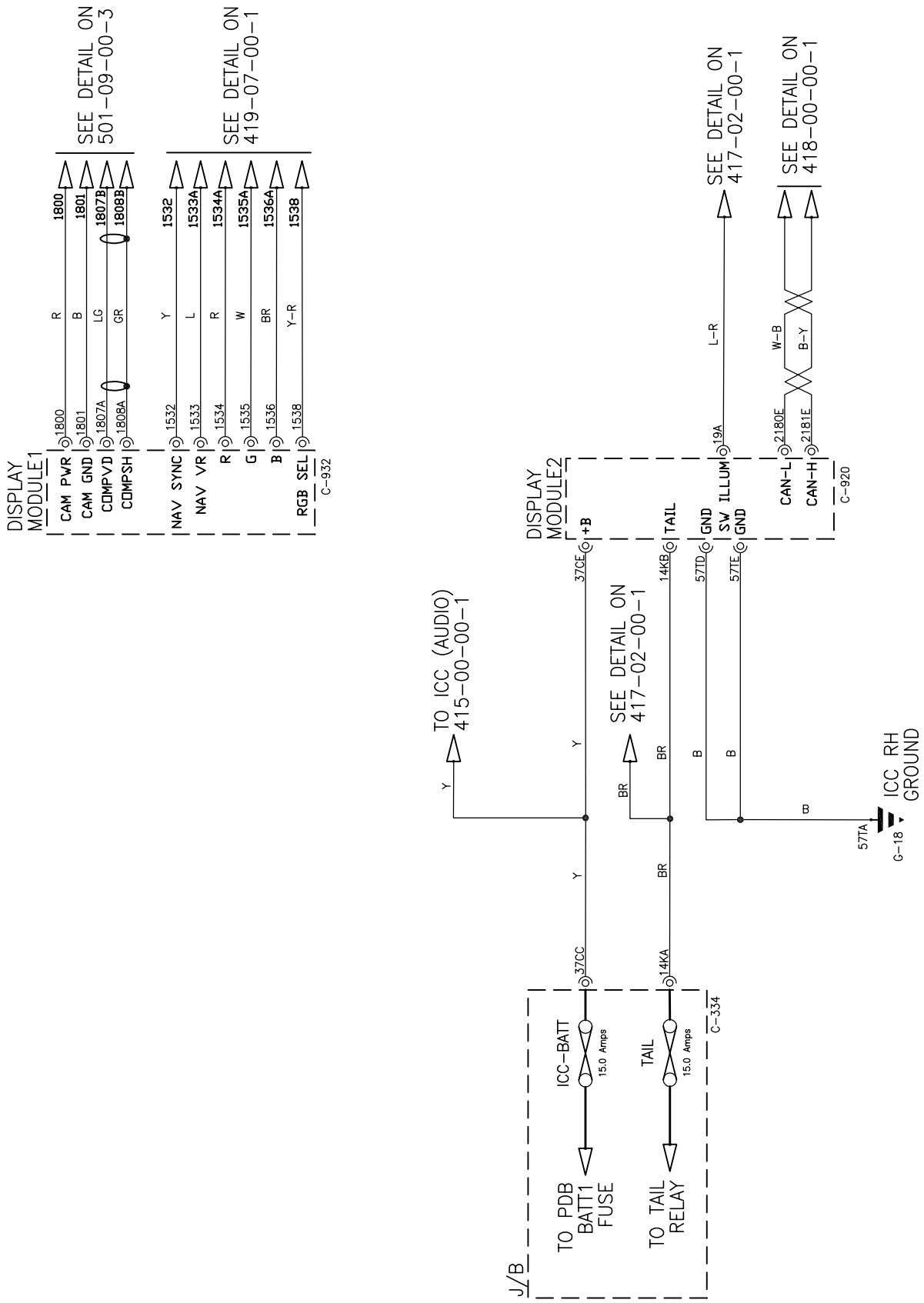
DISPLAY MODULE1
CAM PWR
CAM GND
COMPVD
COMPSH
NAV SYNC
NAV VR
R
G
B
RGB SEL
C-932
1800
1801
1807A
1808A
1532
1533
1534
1535
1536
1538
R
B
LG
GR
Y
L
R
W
BR
Y-R
1800
1801
1807B
1808B
1532
1533A
1534A
1535A
1536A
1538
SEE DETAIL ON 501-09-00-3
SEE DETAIL ON 419-07-00-1
DISPLAY MODULE2
+B
TAIL
GND
SW ILLUM
GND
CAN-L
CAN-H
C-920
37CE
14KB
57TD
57TE
19A
2180E
2181E
L-R
W-B
B-Y
SEE DETAIL ON 417-02-00-1
SEE DETAIL ON 418-00-00-1
TO ICC (AUDIO) 415-00-00-1
SEE DETAIL ON 417-02-00-1
ICC RH GROUND
57TA
G-18
Y
BR
B
J/B
ICC-BATT
TAIL
15.0 Amps
15.0 Amps
37CC
14KA
C-334
TO PDB BATT1 FUSE
TO TAIL RELAY

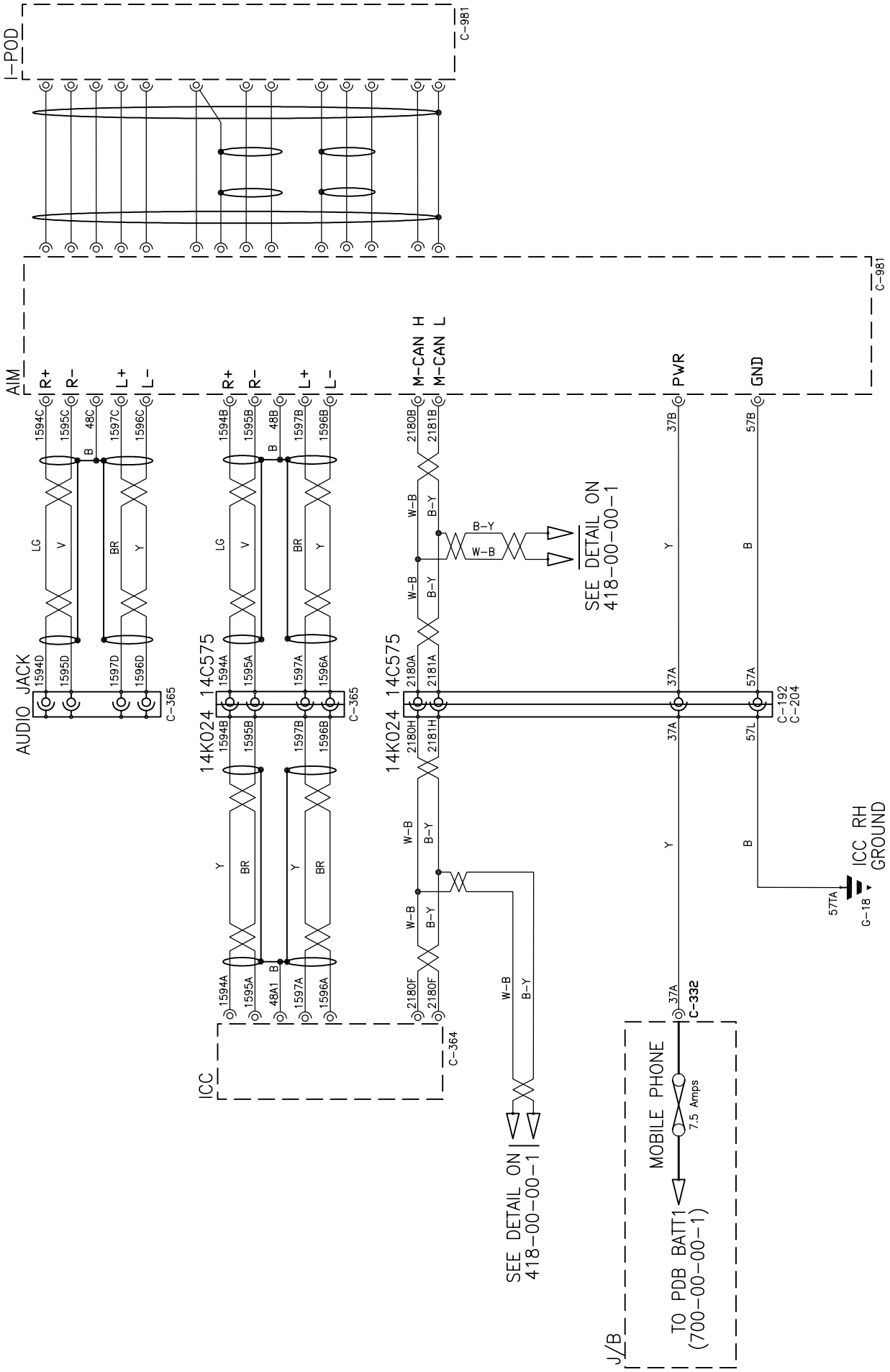
I-POD
C-981
AIM
C-981
R+
R-
L+
L-
M-CAN H
M-CAN L
PWR
GND
AUDIO JACK
C-365
14K024 14C575
C-365
14K024 14C575
C-192
C-204
ICC
C-364
SEE DETAIL ON
418-00-00-1
SEE DETAIL ON
418-00-00-1
ICC RH
GROUND
G-18
J/B
C-332
MOBILE PHONE
7.5 Amps
TO PDB BATT1
(700-00-00-1)

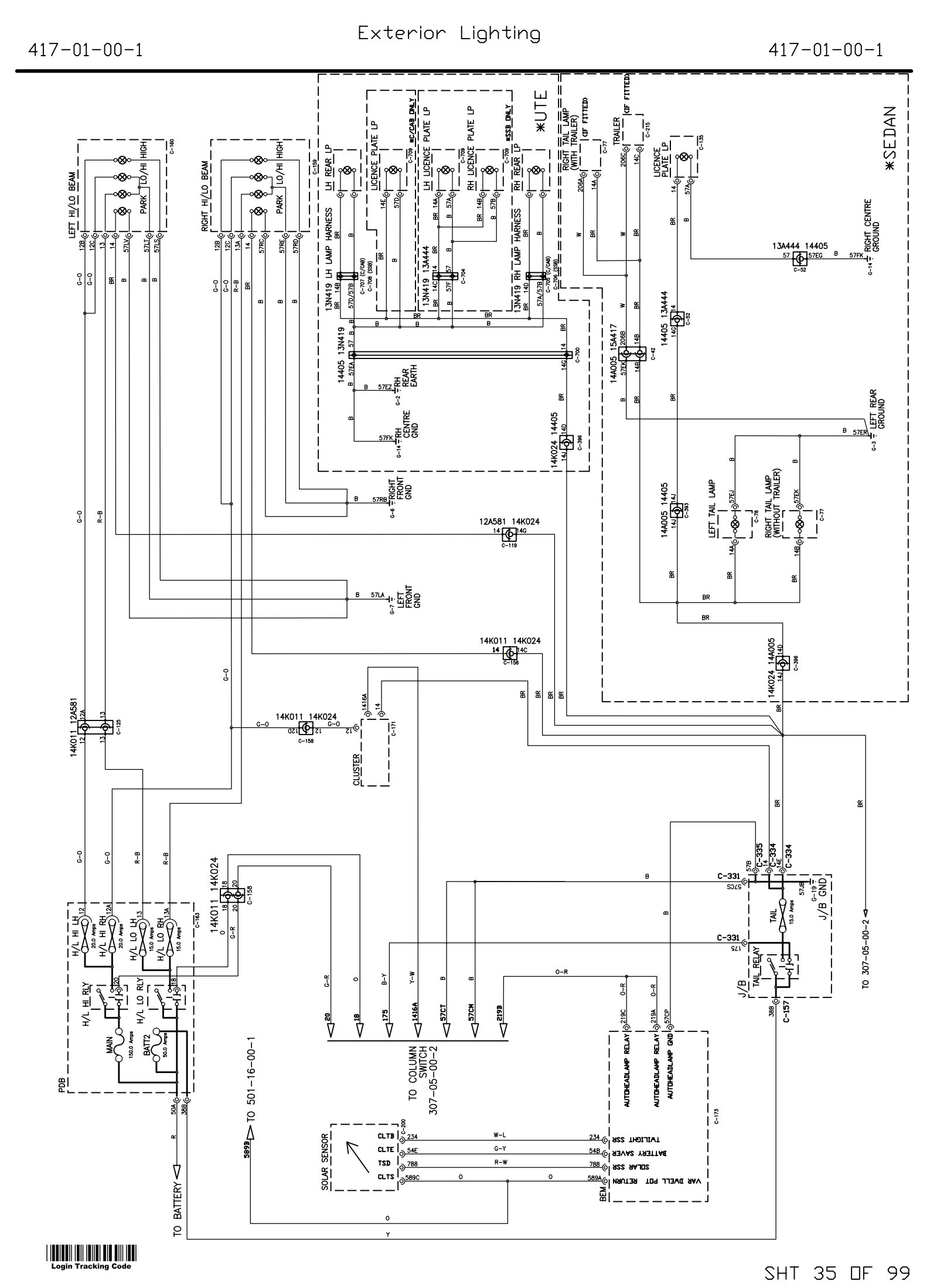
*UTE
*SEDAN
LEFT HI/LO BEAM
RIGHT HI/LO BEAM
LO/HI HIGH
PARK
LH REAR LP
RH REAR LP
LICENCE PLATE LP
LH LICENCE PLATE LP
RH LICENCE PLATE LP
*CC/CAB ONLY
*SSB ONLY
LH LAMP HARNESS
RH LAMP HARNESS
13N419 LH LAMP HARNESS
13N419 RH LAMP HARNESS
13A444
14405 13N419
RH REAR EARTH
RH CENTRE GND
14K024 14405
RIGHT TAIL LAMP (WITH TRAILER)
(IF FITTED)
TRAILER
LICENCE PLATE LP
13A444 14405
RIGHT CENTRE GROUND
14A005 15A417
14405 13A444
LEFT REAR GROUND
14A005 14405
LEFT TAIL LAMP
RIGHT TAIL LAMP (WITHOUT TRAILER)
RIGHT FRONT GND
12A581 14K024
LEFT FRONT GND
14K011 14K024
14A005 14K024
14K011 12A581
CLUSTER
C-331
C-334
C-335
J/B GND
TAIL
TAIL RELAY
J/B
C-157
TO 307-05-00-2
H/L HI LH
H/L HI RH
H/L LO LH
H/L LO RH
H/L HI RLY
H/L LO RLY
MAIN
BATT2
PDB
TO 501-16-00-1
TO BATTERY
TO COLUMN SWITCH 307-05-00-2
AUTOHEADLAMP RELAY
AUTOHEADLAMP RELAY1
AUTOHEADLAMP GND
SOLAR SENSOR
CLTB
CLTE
TSD
CLTS
TWILIGHT SSR
BATTERY SAVER
SOLAR SSR
VAR DWELL POT RETURN
BEM
C-173

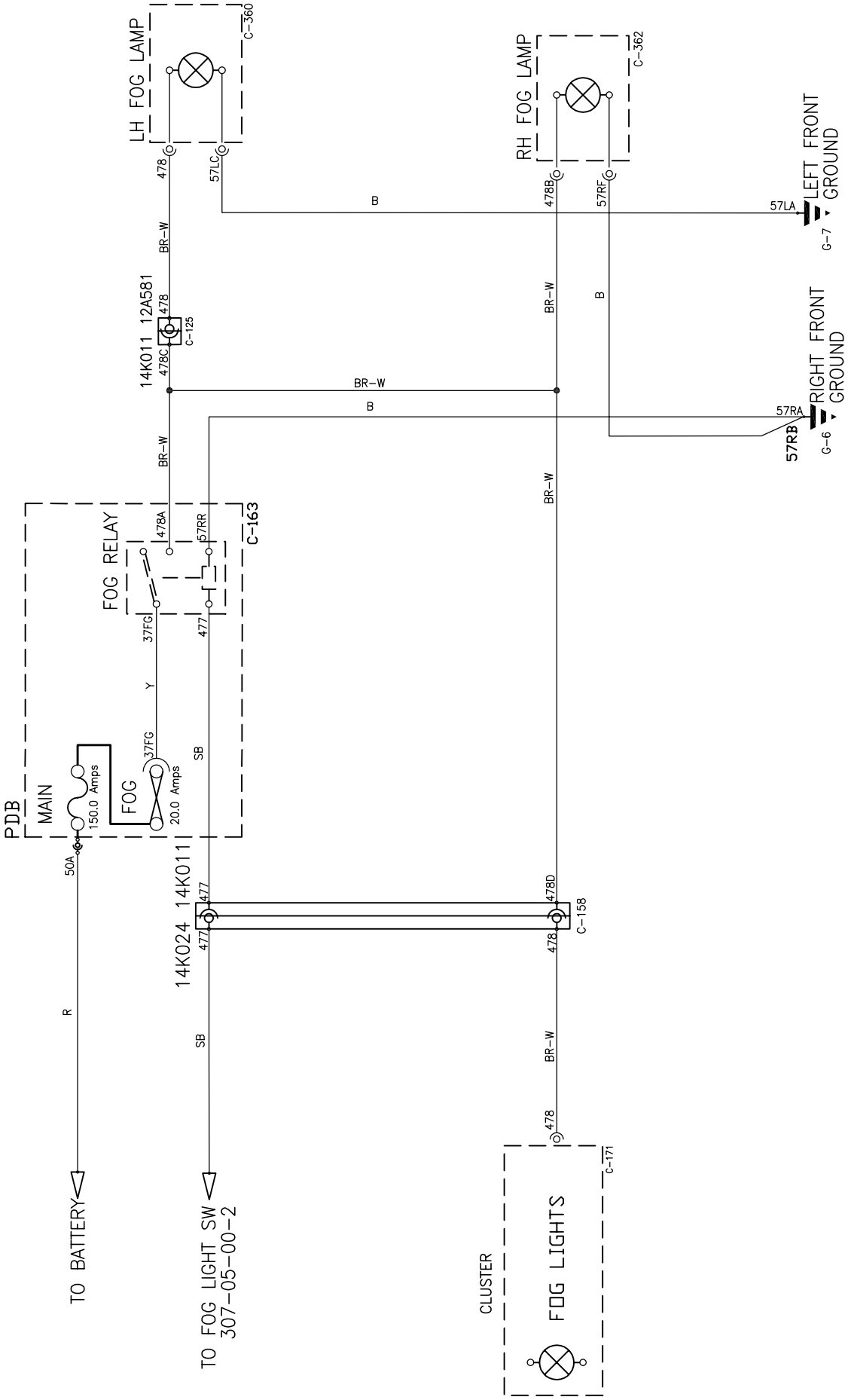
LH FOG LAMP
C-360
RH FOG LAMP
C-362
LEFT FRONT GROUND
G-7
RIGHT FRONT GROUND
G-6
57LA
57RA
57RB
57LC
57RF
478
478B
B
BR-W
14K011 12A581
478C
C-125
FOG RELAY
C-163
478A
57RR
37FG
477
Y
SB
PDB
MAIN
150.0 Amps
FOG
20.0 Amps
50A
14K011
14K024
478D
C-158
R
TO BATTERY
TO FOG LIGHT SW
307-05-00-2
CLUSTER
FOG LIGHTS
C-171

Exterior Lighting-Turn/Hazard-Sedan

417-01-00-3

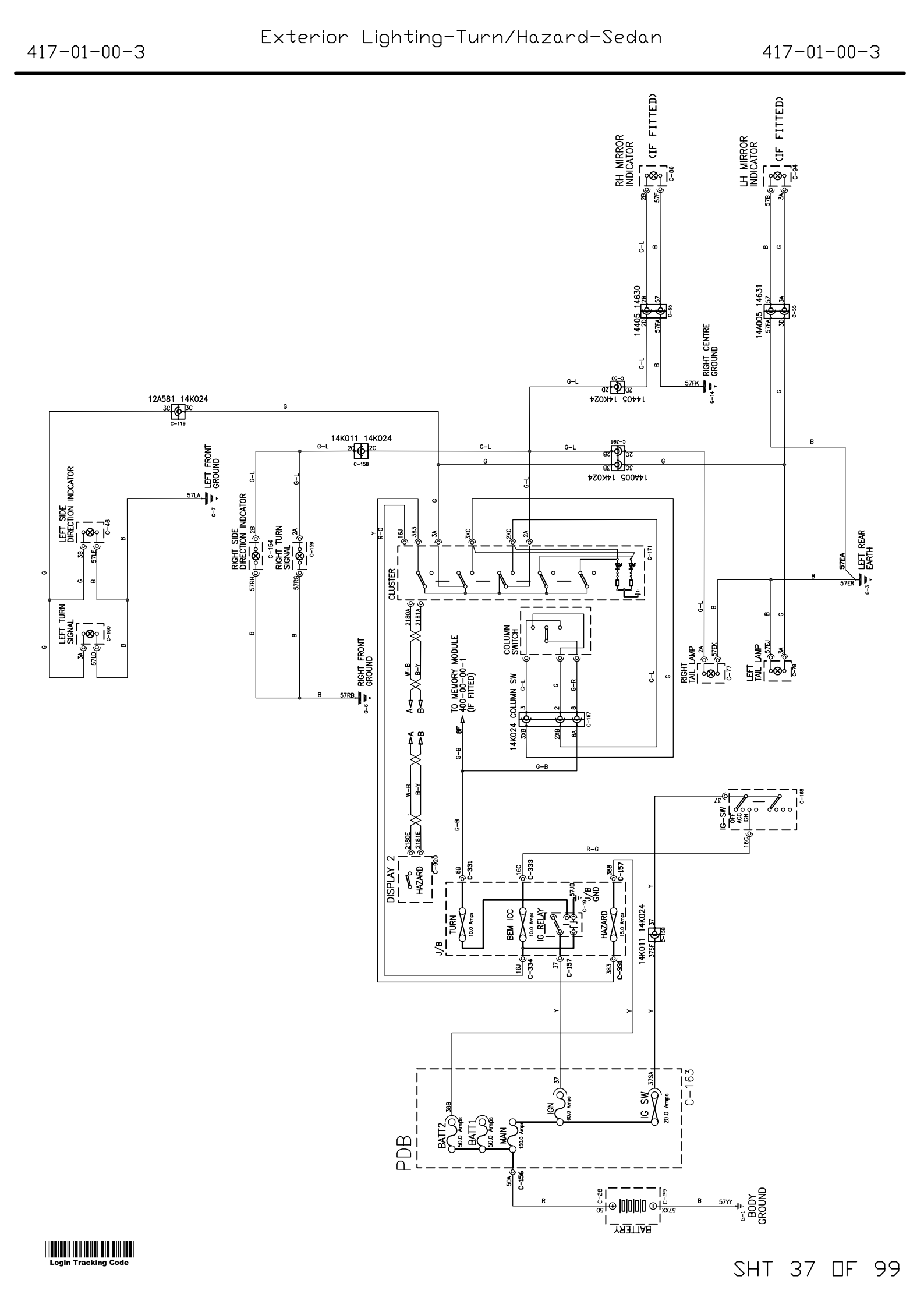

Login Tracking Code

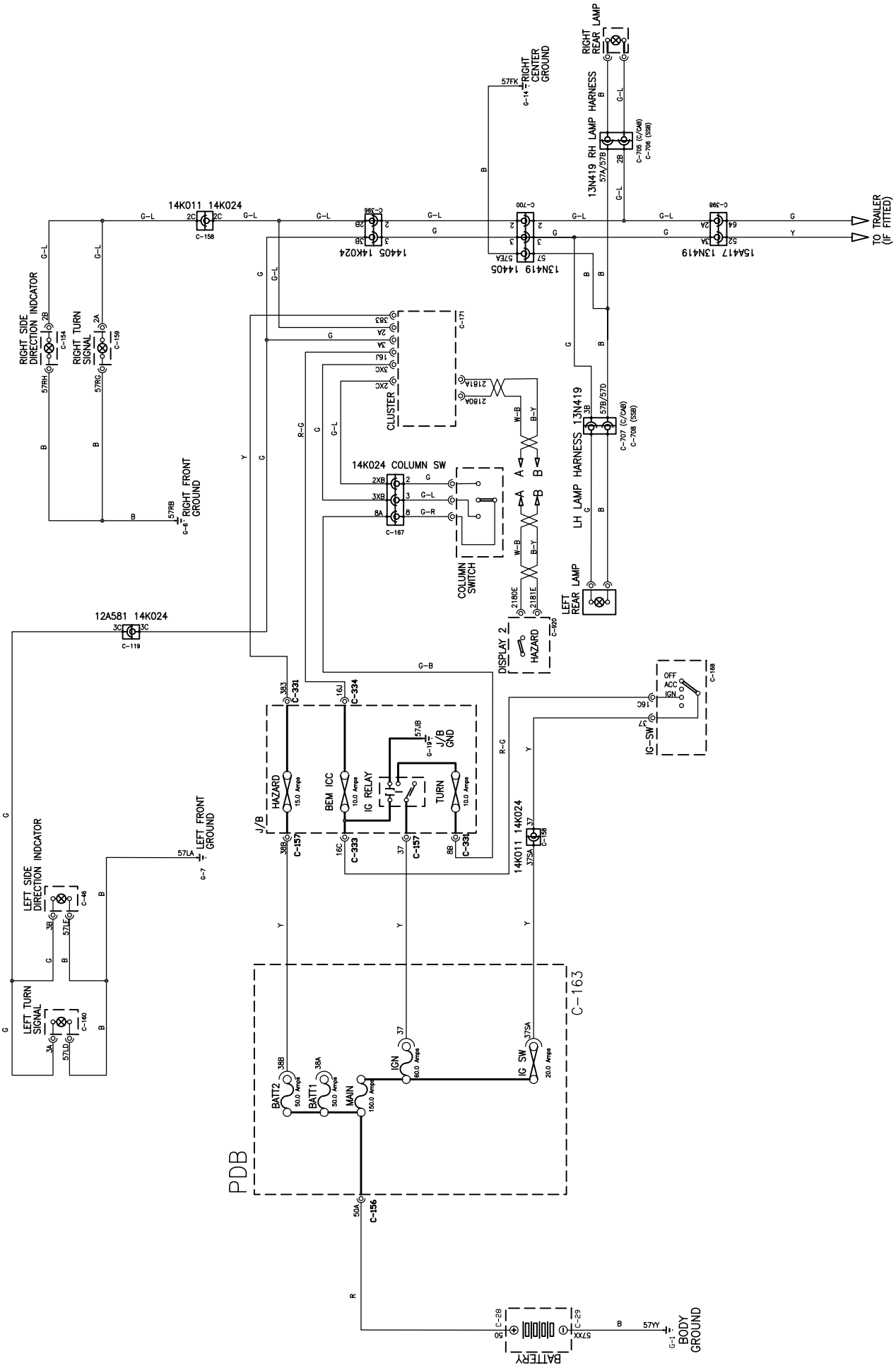

Login Tracking Code

Exterior Lighting-Stop/Backup-Sedan

417-01-00-5

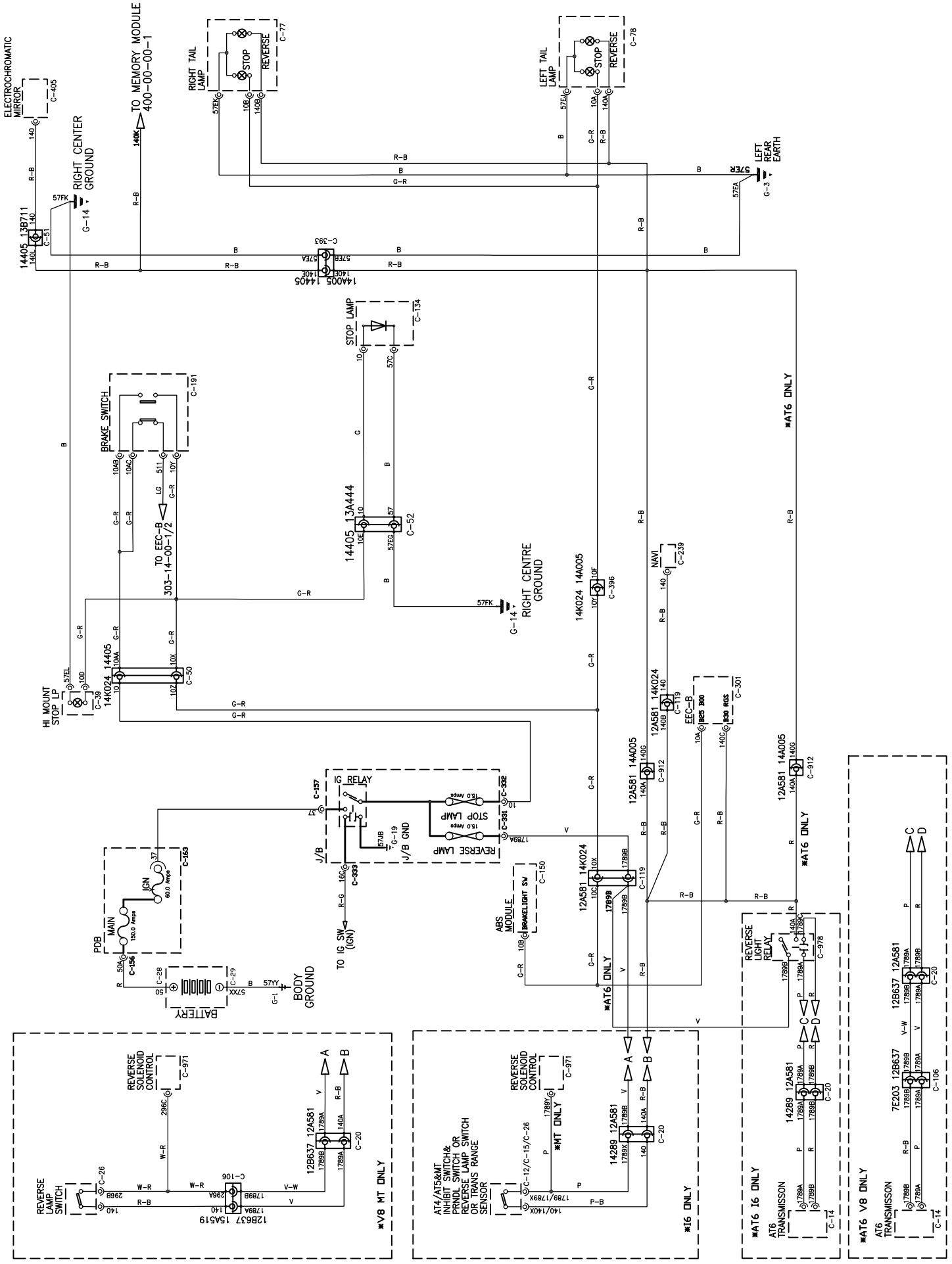

Login Tracking Code

Exterior Lighting-Stop/Backup-Ute

417-01-00-6

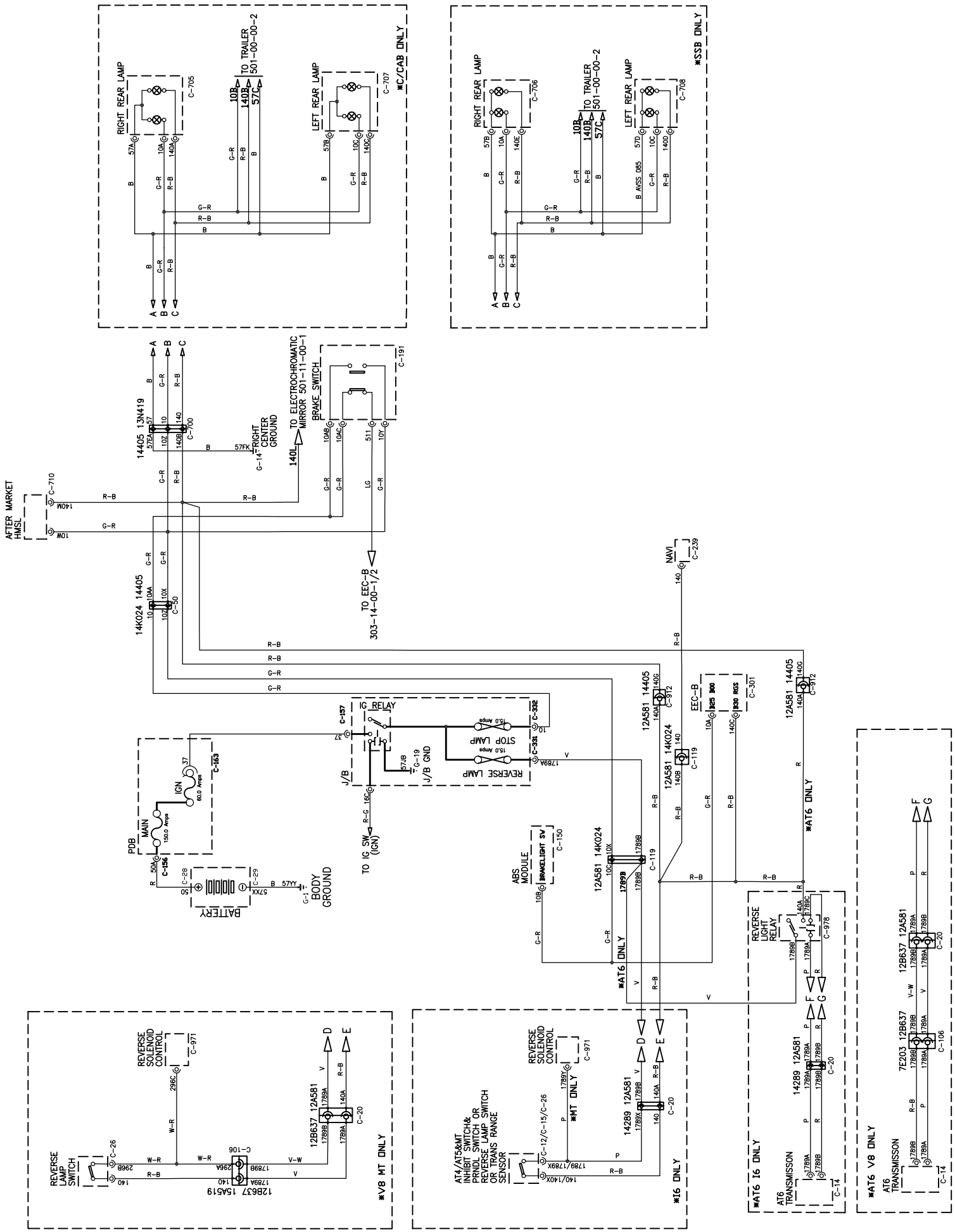

Login Tracking Code

Interior Lighting Switch

417-02-00-1

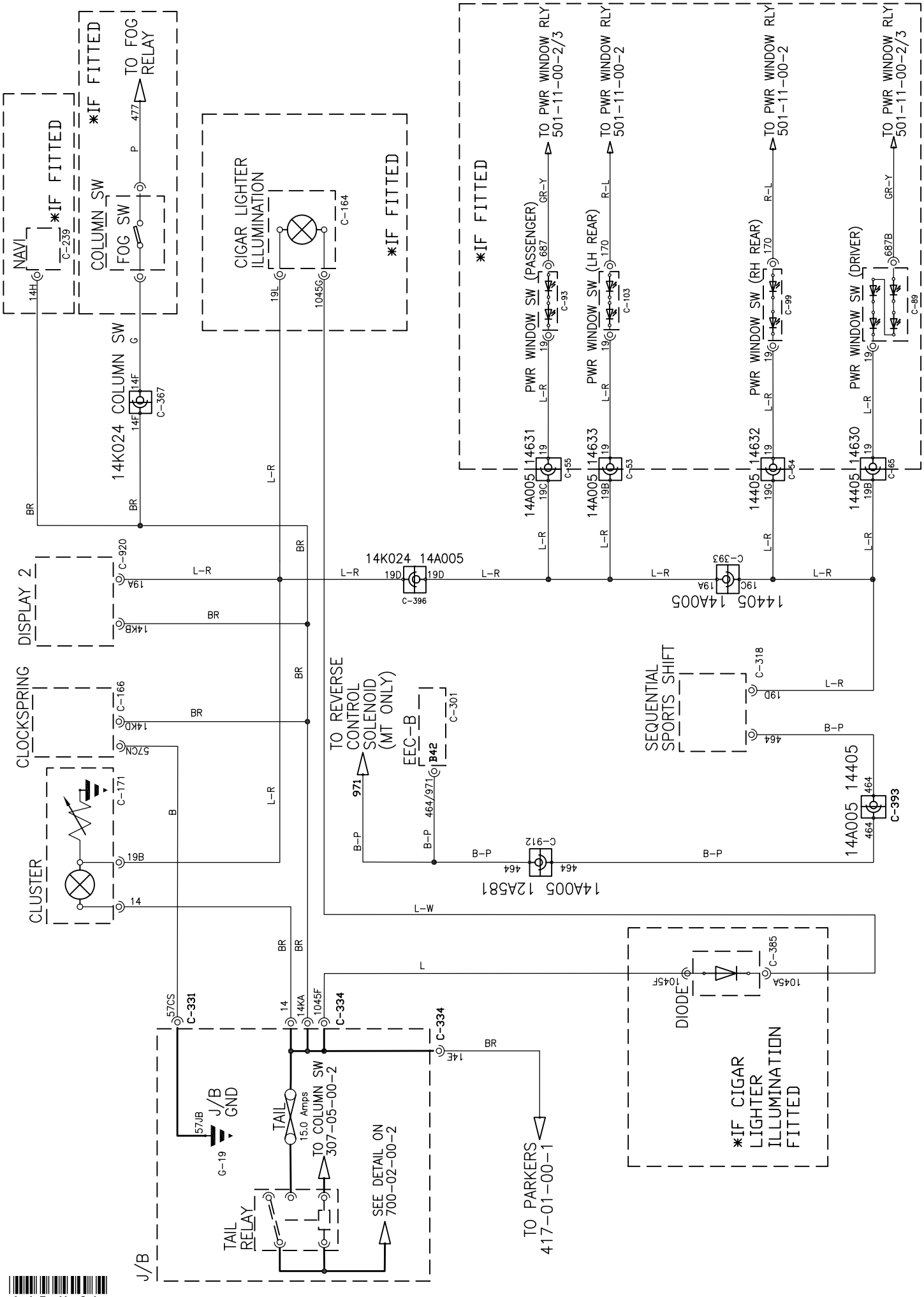

Interior Lighting-Courtesy Illmination-Sedan

417-02-00-2

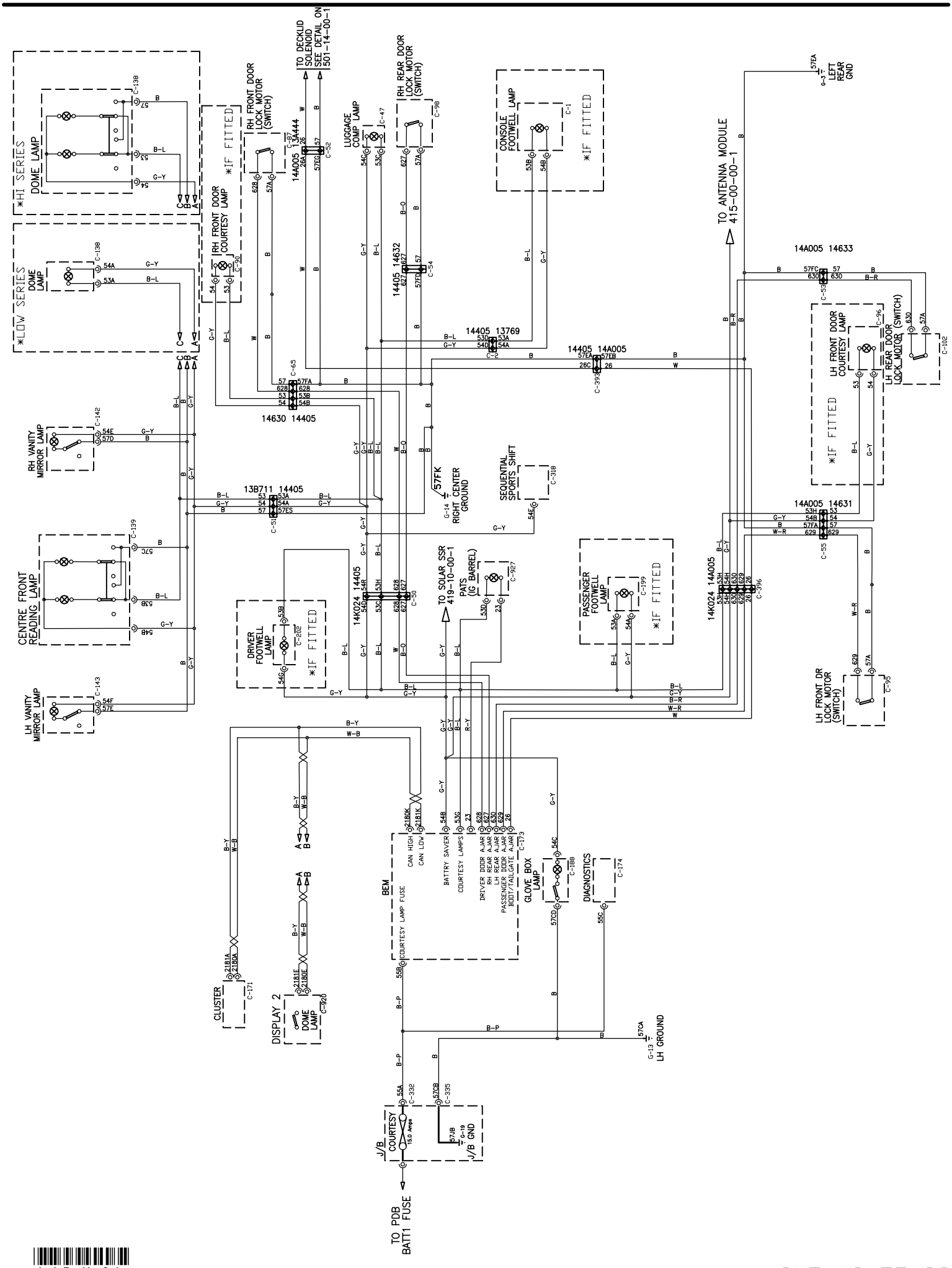

Login Tracking Code

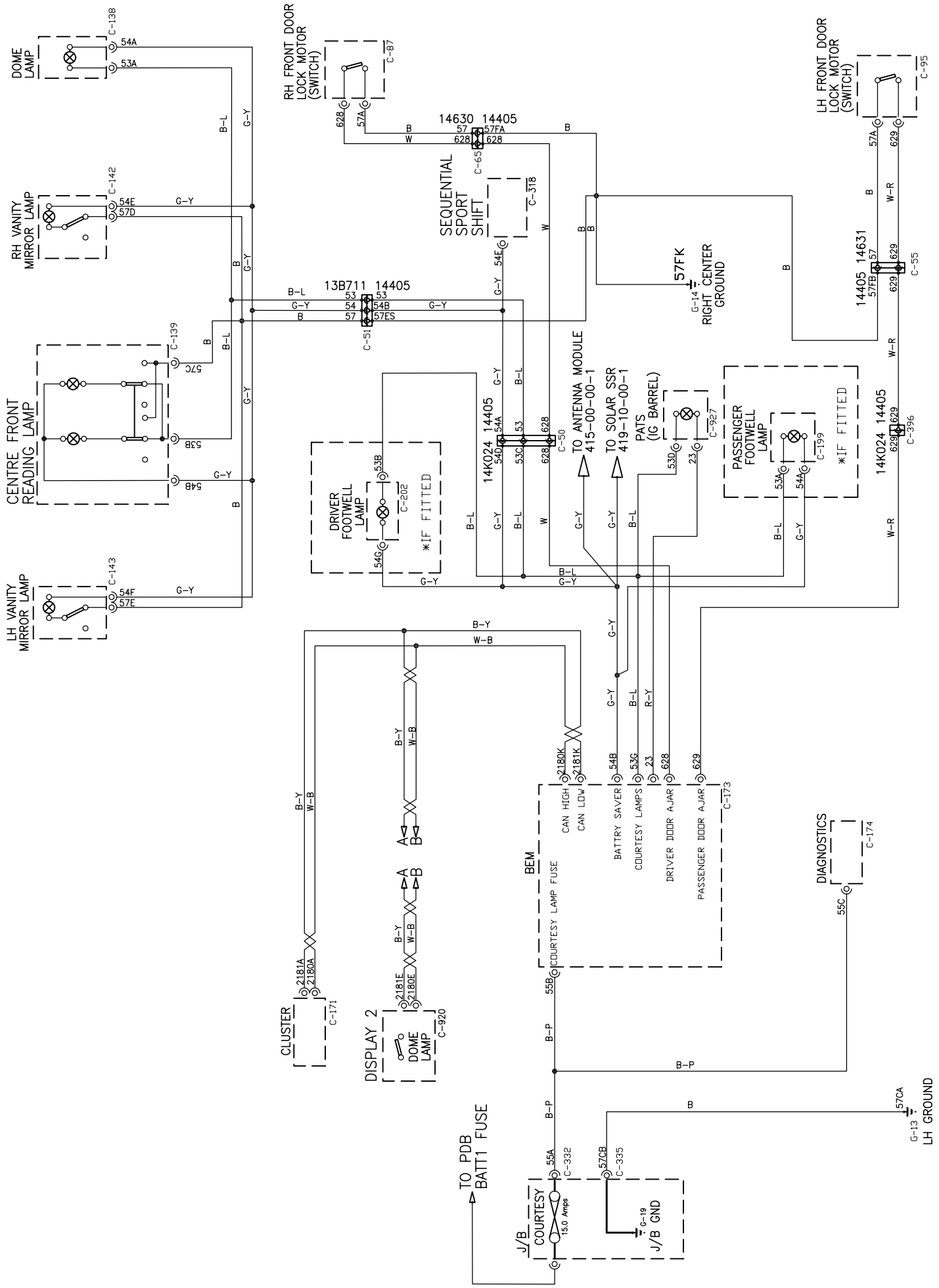

Login Tracking Code

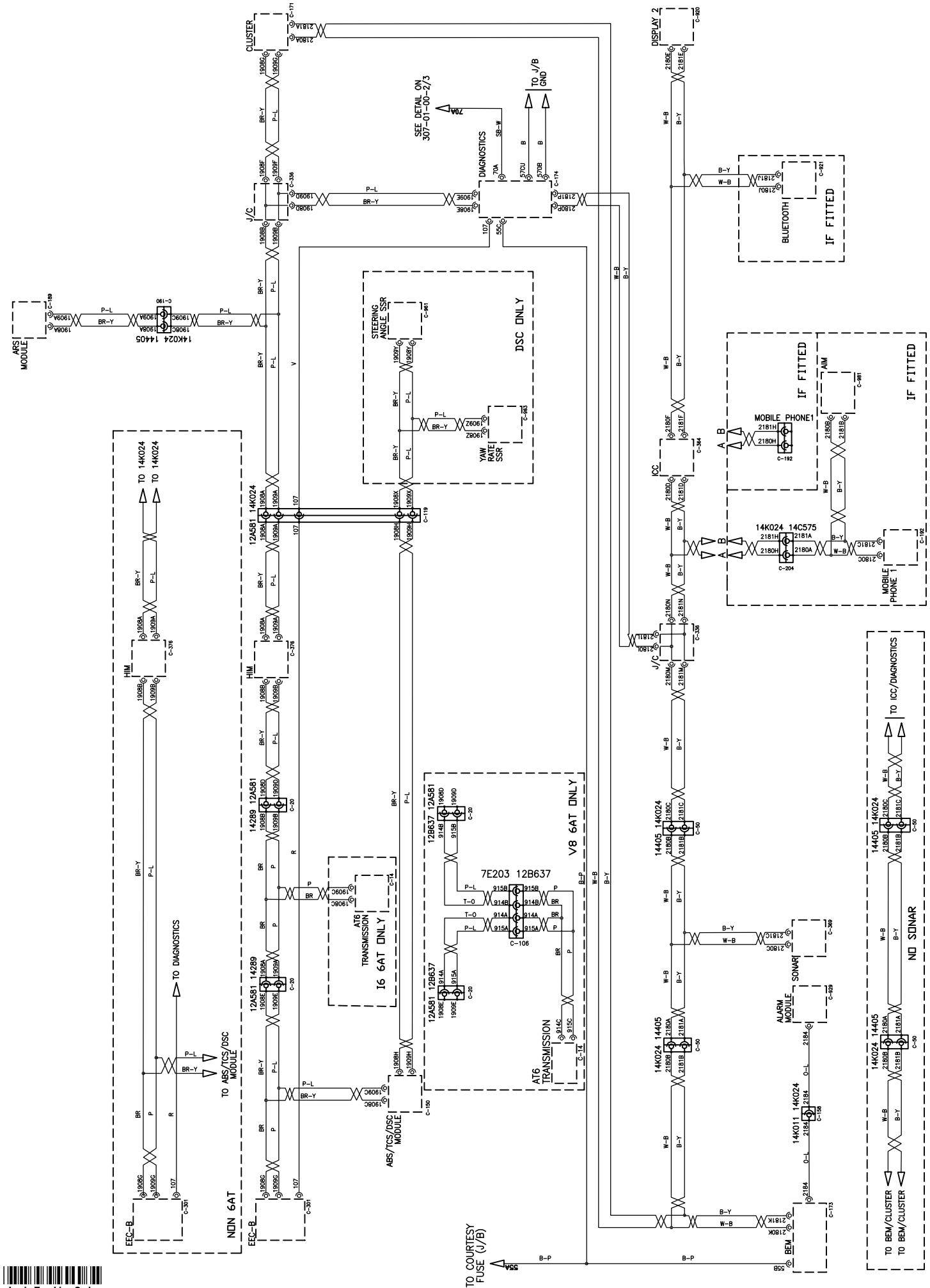

Login Tracking Code

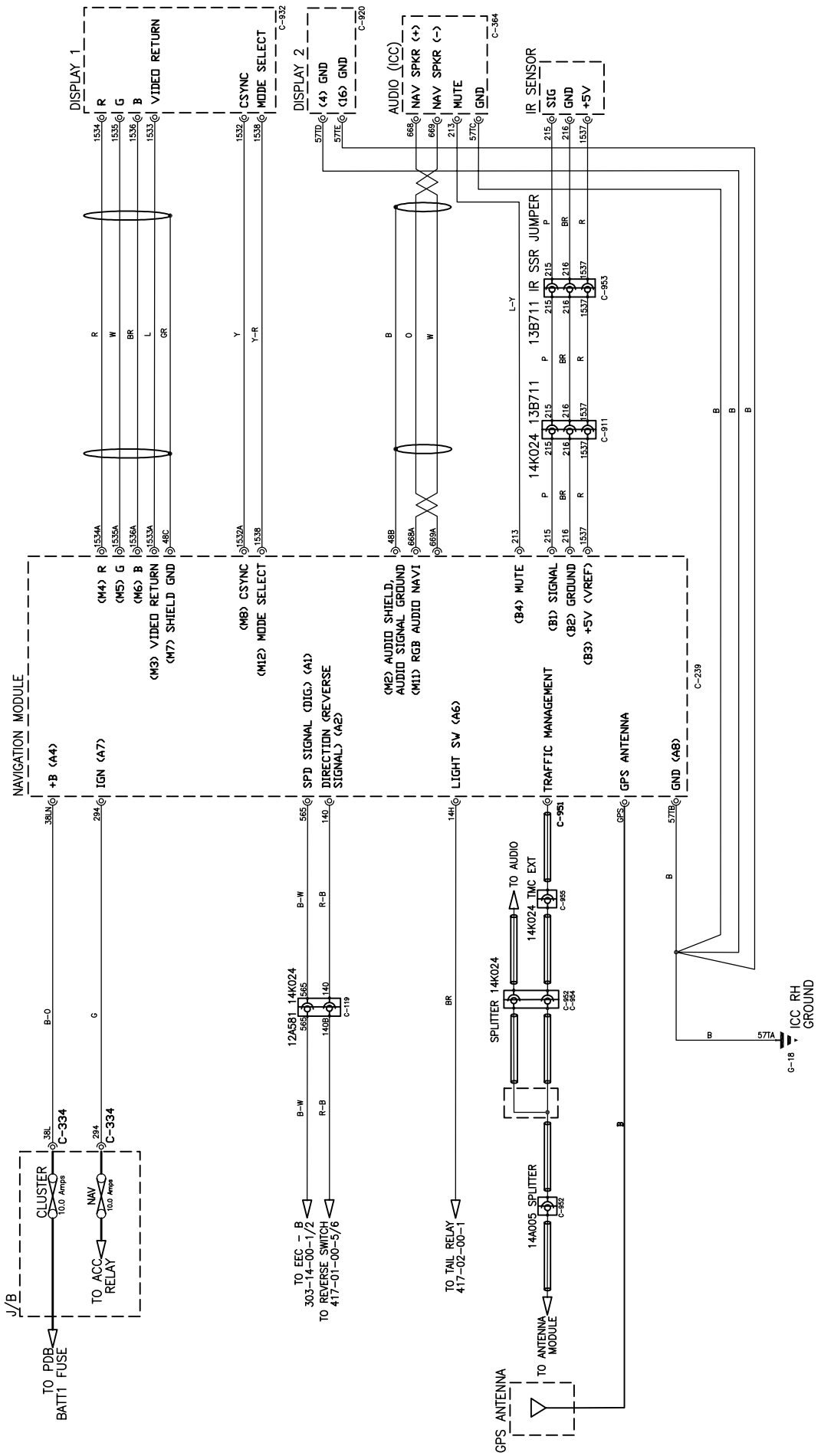
DISPLAY 1
R
G
B
VIDEO RETURN
CSYNC
MODE SELECT
C-932
DISPLAY 2
(4) GND
(16) GND
C-920
AUDIO (ICC)
NAV SPKR (+)
NAV SPKR (-)
MUTE
GND
C-364
IR SENSOR
SIG
GND
+5V
13B711 IR SSR JUMPER
C-953
14K024 13B711
C-911
NAVIGATION MODULE
(M4) R
(M5) G
(M6) B
(M3) VIDEO RETURN
(M7) SHIELD GND
(M8) CSYNC
(M12) MODE SELECT
(M2) AUDIO SHIELD, AUDIO SIGNAL GROUND
(M11) RGB AUDIO NAVI
(B4) MUTE
(B1) SIGNAL
(B2) GROUND
(B3) +5V (VREF)
C-239
+B (A4)
IGN (A7)
SPD SIGNAL (DIG.) (A1)
DIRECTION (REVERSE SIGNAL) (A2)
LIGHT SW (A6)
TRAFFIC MANAGEMENT
GPS ANTENNA
GND (A8)
C-951
TO AUDIO
14K024 TMC EXT
C-955
SPLITTER 14K024
C-962
C-964
12A581 14K024
C-119
14A005 SPLITTER
C-952
TO ANTENNA MODULE
GPS ANTENNA
ICC RH GROUND
G-18
J/B
CLUSTER
10.0 Amps
NAV
10.0 Amps
C-334
TO ACC RELAY
TO PDB BATT1 FUSE
TO EEC - B
303-14-00-1/2
TO REVERSE SWITCH
417-01-00-5/6
TO TAIL RELAY
417-02-00-1

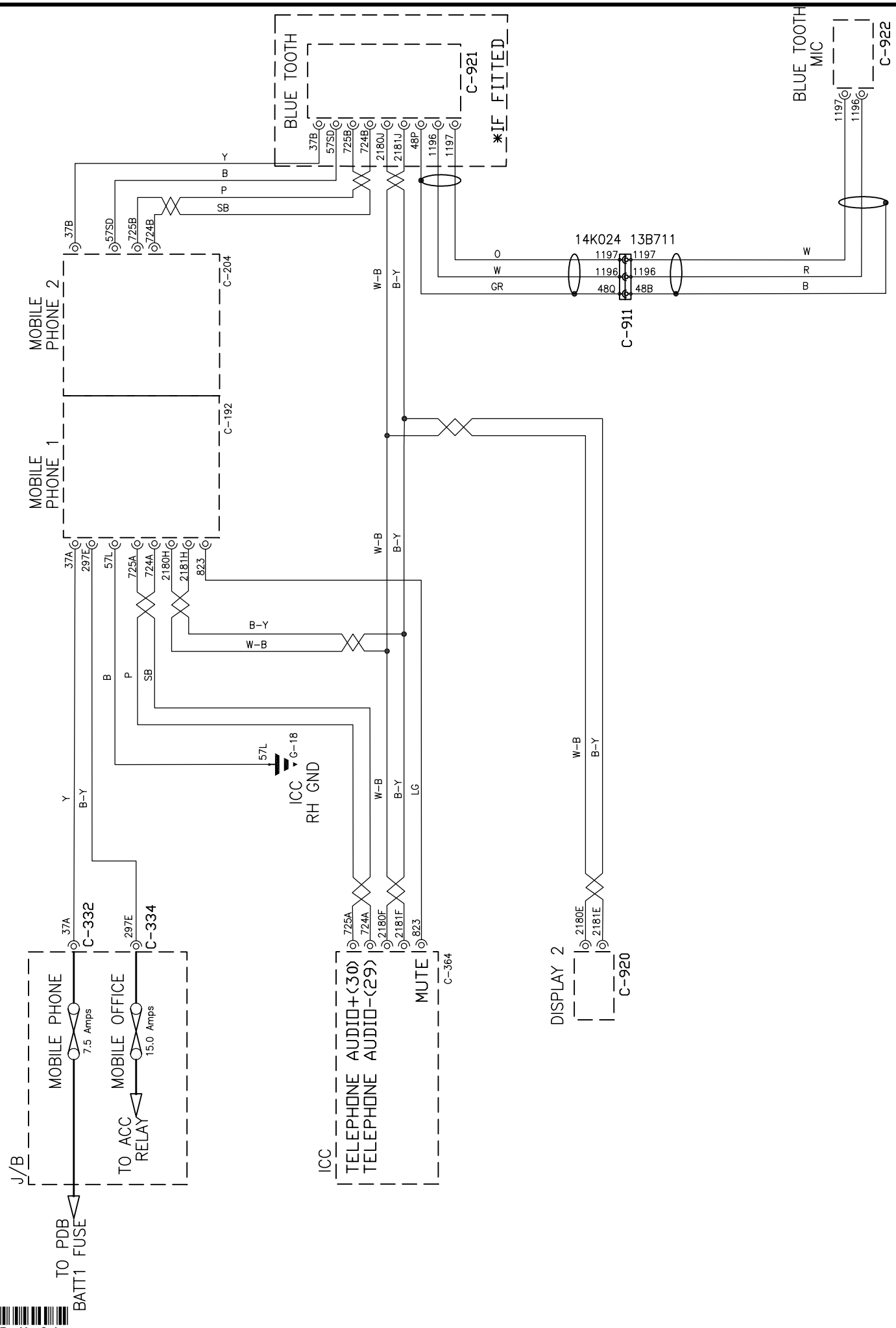
BLUE TOOTH
C-921
*IF FITTED
BLUE TOOTH MIC
C-922
37B
57SD
725B
724B
2180U
2181U
48P
1196
1197
Y
B
P
SB
14K024 13B711
O
W
GR
1197
1196
48Q
48B
R
B
C-911
MOBILE PHONE 2
C-204
MOBILE PHONE 1
C-192
W-B
B-Y
37A
297E
57L
725A
724A
2180H
2181H
823
G-18
ICC RH GND
LG
2180F
2181F
2180E
2181E
C-332
C-334
MOBILE PHONE
7.5 Amps
MOBILE OFFICE
15.0 Amps
TO ACC RELAY
J/B
TO PDB BATT1 FUSE
ICC
TELEPHONE AUDIO+(30)
TELEPHONE AUDIO-(29)
MUTE
C-364
DISPLAY 2
C-920

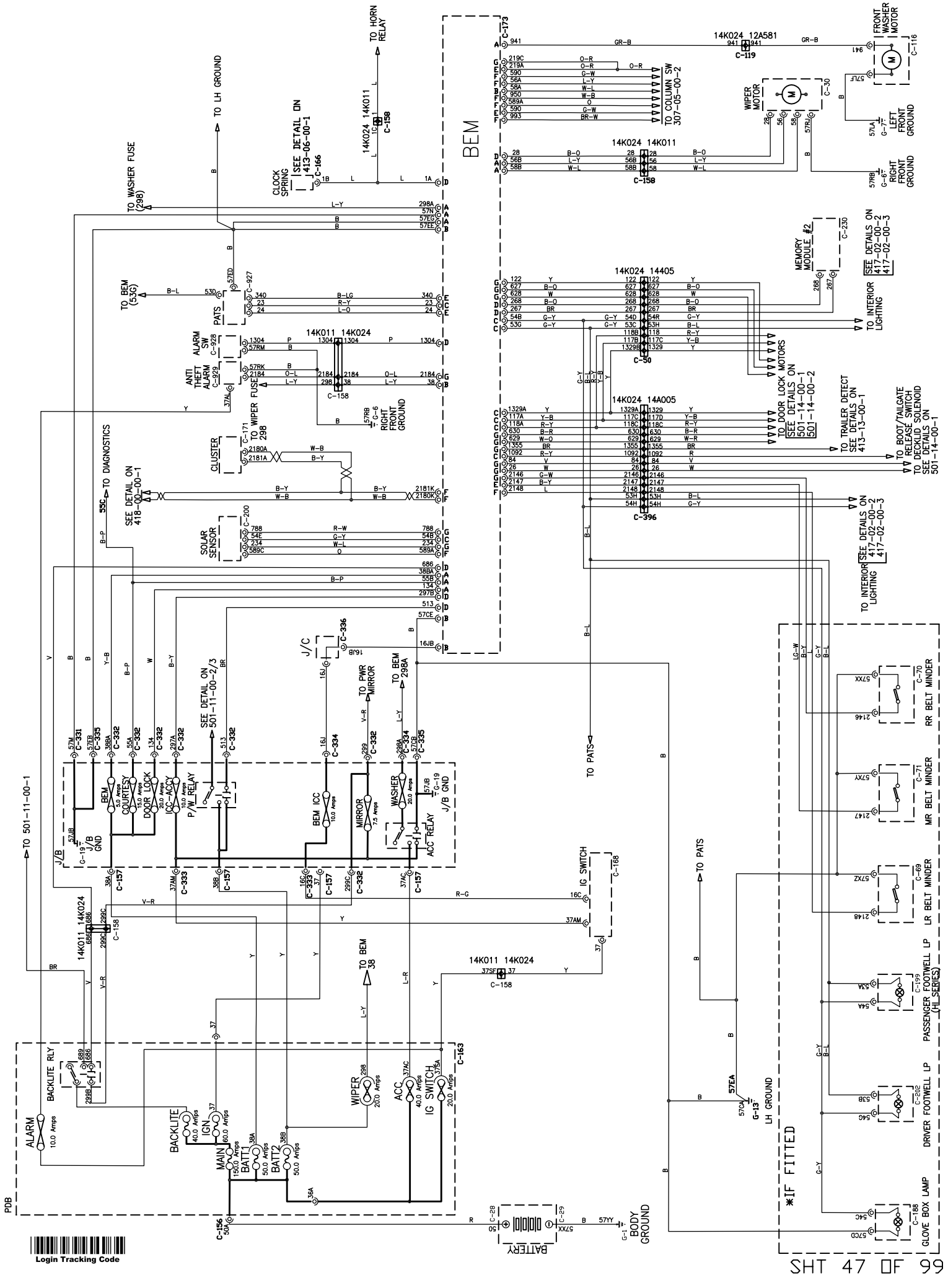

Login Tracking Code