CLASS GUIDELINE

DNV-CG-0138 Edition July 2021

Direct strength analysis of hull structures in passenger ships

The content of this service document is the subject of intellectual property rights reserved by DNV AS ("DNV"). The user accepts that it is prohibited by anyone else but DNV and/or its licensees to offer and/or perform classification, certification and/or verification services, including the issuance of certificates and/or declarations of conformity, wholly or partly, on the basis of and/or pursuant to this document whether free of charge or chargeable, without DNV's prior written consent. DNV is not responsible for the consequences arising from any use of this document by others.

The PDF electronic version of this document available at the DNV website dnv.com is the official version. If there are any inconsistencies between the PDF version and any other available version, the PDF version shall prevail.

DNV AS

FOREWORD

DNV class guidelines contain methods, technical requirements, principles and acceptance criteria related to classed objects as referred to from the rules.

© DNV AS July 2021

Any comments may be sent by e-mail to *rules@dnv.com*

This service document has been prepared based on available knowledge, technology and/or information at the time of issuance of this document. The use of this document by other parties than DNV is at the user's sole risk. Unless otherwise stated in an applicable contract, or following from mandatory law, the liability of DNV AS, its parent companies and subsidiaries as well as their officers, directors and employees ("DNV") for proved loss or damage arising from or in connection with any act or omission of DNV, whether in contract or in tort (including negligence), shall be limited to direct losses and under any circumstance be limited to 300,000 USD.

CHANGES – CURRENT

This document supersedes the July 2018 edition of DNVGL-CG-0138.

The numbering and/or title of items containing changes is highlighted in red.

Changes July 2021

Topic	*Reference*	*Description*
Fatigue requirement and calculation procedure	Sec.5	Alignment of fatigue assessment procedure for passenger ships with latest changes of fatigue requirements in DNV-RU-SHIP Pt.3.
Rebranding to DNV	All	This document has been revised due to the rebranding of DNV GL to DNV. The following have been updated: the company name, material and certificate designations, and references to other documents in the DNV portfolio. Some of the documents referred to may not yet have been rebranded. If so, please see the relevant DNV GL document.

Editorial corrections

In addition to the above stated changes, editorial corrections may have been made.

CONTENTS

Changes – current 3

Section 1 General 5
- 1 Introduction 5
- 2 Objective 5
- 3 Scope 5
- 4 Application 5
- 5 References 6
- 6 Definitions 6

Section 2 Direct strength assessment 7
- 1 Load combinations 7
- 2 Pillar analysis 8
- 3 Bow impact analysis 9
- 4 Docking analysis 9
- 5 Direct wave load analysis 9

Section 3 Global FE strength analysis 10
- 1 Objectives 10
- 2 Global finite element model 10
- 3 Boundary conditions 11
- 4 Stillwater loads application 11
- 5 Dynamic loads application 12
- 6 Simplified global strength assessment method 13

Section 4 Local FE strength assessment 14
- 1 Application 14
- 2 Peak stress control 14
- 3 Shear stress control 14
- 4 Pillar supporting structure 14

Section 5 Fatigue 15
- 1 Method and application 15
- 2 Fatigue capacity and strength representation 15

Changes – historic 18

SECTION 1 GENERAL

1 Introduction

In many contemporary passenger ship designs, the superstructure extends over most of the ship length and the internal structure comprises of a large number of decks connected together with pillars and longitudinal and transverse bulkheads. The structure, in general, has many discontinuities such as knuckle points, recesses, non-continuous bulkheads and decks and geometric irregularities such as openings in decks and bulkheads, as well as many side shell doors and windows. To evaluate the global stiffness of the structure, establish the load path and assess the global and local strength of the design, the use of direct analysis methods is deemed necessary.

Strength analysis carried out in accordance with the procedure outlined in this class guideline will normally be accepted as basis for class approval.

It is recommended that the designer provides the intended analysis procedure for review at an early stage of the design process.

Where in the text it is referred to the rules, the references refer to the latest edition of DNV rules for classification of ships.

2 Objective

The objective of this class guideline is to provide:

— Guidance for the hull structural design and assessment of passenger ships in accordance with the rules when direct strength calculations are required.
— A general description on how to carry out the required calculations and analyses.
— Guidance on other structural aspects, not necessarily being part of the scope of the rules, but being important for passenger ship design, e.g. vibrations.

3 Scope

This class guideline describes the methods for performing direct strength calculations for passenger ships by use of finite element methods. The calculation procedure is divided in two levels, global and local, defined in Table 1 below.

Table 1 Analysis levels

Level	*Description*	*Requirements*
Global	The global model is used to evaluate the global strength of the entire hull girder accounting for the stiffness contribution of the superstructure.	To evaluate the global hull girder strength and perform yielding and buckling check of stiffened plates and pillars as required by the rules.
Local	Local finite element models of areas with geometric irregularities or discontinuities, e.g openings, etc.	— The peak stresses to be within acceptable limits given in DNV-RU-SHIP Pt.5 Ch.4 Sec.2 [5.4]. — Fatigue life > 25 years criterion.

4 Application

The guideline is applicable for ships with the ship type notation **Passenger ship** with partly effective superstructure and/or partly effective upper part of hull girder.

5 References

This guideline considers further information from the publications listed in Table 2.

Table 2 DNV references

Document code	*Title*
DNV-RU-SHIP Pt.5 Ch.4	Passenger ships
DNV-CG-0127	Finite element analysis
DNV-CG-0129	Fatigue assessment of ship structure

6 Definitions

6.1 Symbols and units

See DNV-RU-SHIP Pt.3 Ch.1 Sec.4 [1].

SECTION 2 DIRECT STRENGTH ASSESSMENT

1 Load combinations

1.1 General

The moment and shear force distributions used in the final element model (FEM) analyses are to approximate the permissible bending moment and shear force curves as far as possible. Typical still water and wave bending moments are shown in Figure 1.

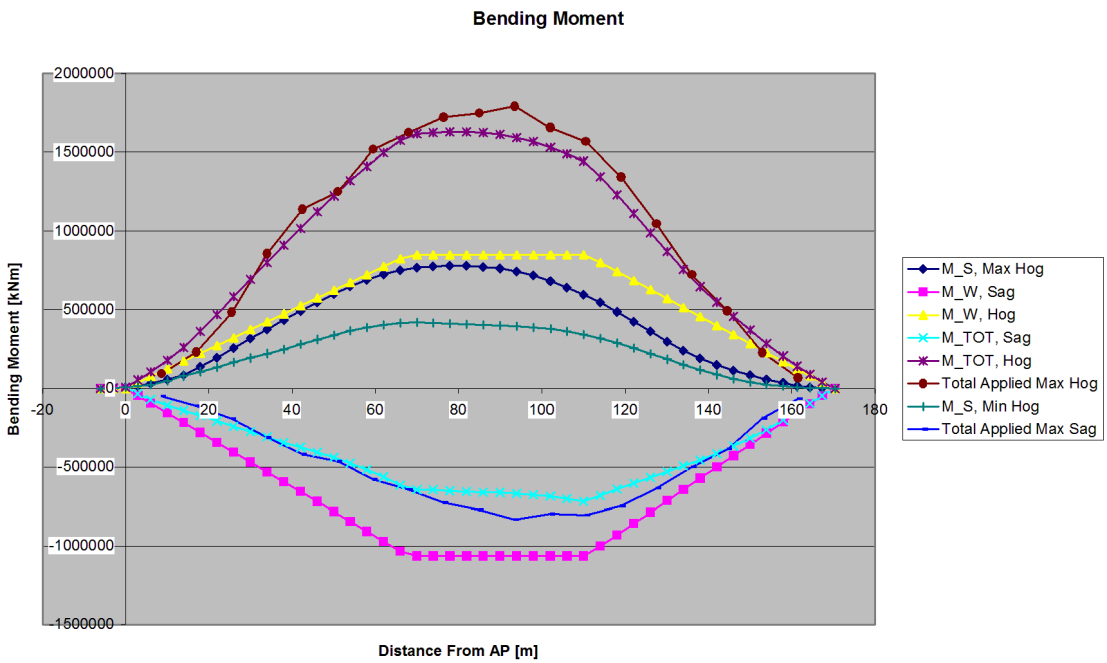

Figure 1 Typical still water and wave moment limit curves

Respective standard cases to be considered for longitudinal strength analysis are loading conditions with maximized vertical bending moments given in [1.2] and [1.3].

1.2 Maximum hogging (LC1)

This loading condition represents the maximum hogging vertical bending moment curve by combining:

— the permissible still water hogging moment envelope limit curve
— the vertical wave bending moment curve for hogging, as defined in DNV-RU-SHIP Pt.3 Ch.4 Sec.4 [3.1].

The maximum hogging condition will normally be decisive for the dimensioning of the following structural areas:

— upper decks with respect to yielding criterion
— lower longitudinal bulkheads and side shell and bottom structure with respect to buckling criterion
— main continuous longitudinal structure with respect to shear stress outside 0.4 *L* amidship

— pillar loads induced by the global deformations; this is important assessment to identify pillars under tension loads
— peak stresses in areas with discontinuities or geometric irregularities, such as cut-outs and openings in upper sides, decks and bulkheads.

1.3 Maximum sagging (LC2)

This loading condition represents the maximum sagging vertical bending moment curve by combining:

— the permissible still water sagging or the minimum permissible still water hogging moment curve, whichever is applicable
— the vertical wave bending moment curve for sagging, as defined in the rules DNV-RU-SHIP Pt.3 Ch.4 Sec.4 [3.1].

This loading condition will normally be decisive for the dimensioning of the following structural areas:

— upper decks, longitudinal bulkheads and side walls with respect to buckling
— pillar loads induced by the global deformations. This is important assessment to identify pillars under tension loads.

1.4 Maximum vertical shear (LC3)

This loading condition represents the rule vertical wave shear force within 0.4 *L* amidship. This condition shall cover:

— shear strength within 0.4 *L*
— shear strength at areas with large cutouts or cluster of cutouts e.g. passenger lifts area, side shell with doors and windows.

The maximum and minimum still water conditions shall be combined with the positive and negative wave shear force as defined in the rules DNV-RU-SHIP Pt.3 Ch.4 Sec.4 [3.2].

2 Pillar analysis

2.1 Objective

The purpose of the pillar analysis using direct strength assessment methods, is to calculate the maximum axial force in compression and/or tension in each pillar, and verify that the structural strength of the pillars and surrounding structure is adequate.

2.2 Analysis procedure

When the still water loads are applied to the global FE model according to Sec.3 [4] and Sec.3 [5], the forces in the pillars may be calculated according to the following procedure:

— Step 1: calculate the pillar loads from the maximum hogging or maximum sagging load case (LC1 or LC2). This load case gives the combined pillar load due to global bending and deck loads, but includes local effects on the pillars due to the way the loads are applied and distributed in the model.
— Step 2: the same load case as in step 1, but with boundary conditions where transverse bulkheads are fixed in vertical direction from bottom to double bottom. This step enables to isolate the local effects on the pillars.
— Step 3: calculate the pillar loads due to steel weight and design deck loads applying the rule envelope vertical acceleration defined in DNV-RU-SHIP Pt.3 Ch.4 Sec.3 [3.3]. The same boundary conditions as in step 2 are applied. This step gives the pillar loads due to self weight and deck loads accelerations only.

— Step 4, sum: the total pillar load, including the effect of global deflection, may be calculated according to the following:

  Total pillar load = (Pillar load from step 1 – Pillar load from step 2) + Pillar load from step 3.

3 Bow impact analysis

3.1 General

The bow impact analysis will normally be decisive for the dimensioning of the following structural areas:

— decks and longitudinal bulkheads in the fore ship with respect to compressive buckling stress.

3.2 FE model

The global model may be cut at the first full transverse bulkhead aft of collision bulkhead and fixed boundary conditions applied.

3.3 Load application

Pressure loads according to DNV-RU-SHIP Pt.3 Ch.10 Sec.1 [3.3.5] to be applied to the bow structure. Load area is given by DNV-RU-SHIP Pt.3 Ch.10 Sec.1 [1.1.3].

Alternative load application method represents the bow impact pressure loads as forces according to DNV-RU-SHIP Pt.3 Ch.12 Sec.5 [2.4].

4 Docking analysis

4.1 Modelling and load application

When required, a separate docking analysis should be carried out using the global FE model based on the lightship weight and the docking plan.

Spring elements should be added as boundary conditions to model the docking blocks.

4.2 Critical structure

The docking analysis will often be decisive for the dimensioning of the following structural areas:

— capacity of double bottom structure and support
— shear buckling of floors and girders in the double bottom.

4.3 Aft structure

For vessels with extended flat bottom design in the aft structure, the docking analysis will provide a good overview of the vertical deflections. It may be necessary to add supporting pillars/docking blocks under the flat bottom during docking if the analysis shows significant deflections.

5 Direct wave load analysis

Direct wave load analysis shall be based on recognised software. As recognised software is considered all wave load programs that can show results to the satisfaction of the Society.

SECTION 3 GLOBAL FE STRENGTH ANALYSIS

1 Objectives

The objectives of the global analysis are to:

— determine the longitudinal hull girder stresses
— determine stresses in transverse structures due to racking
— obtain forces in pillars
— provide boundary conditions for the local analysis described in Sec.4.

2 Global finite element model

2.1 General

The main purpose for the global model is to represent the global stiffness satisfactorily with respect to the objective for the analysis. The effectiveness of the superstructure is dependent on its length, the flexibility of its supports, the integration with the hull girder at its ends, and the size and number of openings in side bulkheads and internal decks.

Global finite element modelling is described in DNV-CG-0127 Sec.2 [2.1] to DNV-CG-0127 Sec.2 [2.4]. In addition, some specific modelling considerations for passenger ship are given in this subsection.

2.2 Modelling simplifications

It may not be practical to include all bulkheads and steps in their correct place. Bulkheads may be lumped to the nearest mesh-line in the global modelling. However, it is important to document the consequences when bulkheads are lumped. Figure 1 shows how the shear stress in the deck plate will be affected after bulkheads have been lumped.

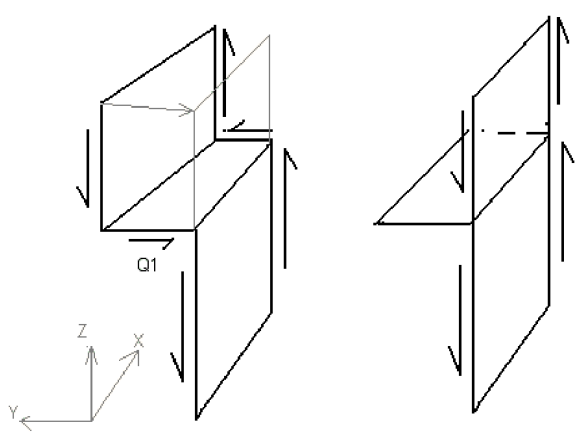

Figure 1 Effect of bulkhead lumping

3 Boundary conditions

3.1 General

The boundary conditions are described in DNV-CG-0127 Sec.2 [2.5]. In addition, some specific information for passenger ship are given in this subsection.

3.2 Balancing of global FEM model

It is of great importance that the internal and external loads applied on the global FEM model are in balance with minimum of reaction forces at the fixation points. The size of the reaction forces will indicate how well the applied loads are balanced and also how realistically the loads are distributed along the hull girder in order to achieve the desired bending moment and shear force curves. None of the reaction forces should exceed 2% of the total weight of the structure.

3.3 Fixation points

The fixation points can be either individual nodes or a group of nodes. Preferably they should be 'simply supported' in such a way for the global structural model to avoid rigid body movement. The fixation points should be located away from areas where the stress is of interest.

For the longitudinal strength assessment the boundary conditions can be applied as given in DNV-CG-0127 Sec.2 [2.5.2].

For the transverse strength assessment (racking analysis) according to DNV-RU-SHIP Pt.5 Ch.4 Sec.2 [2.2.3], the following boundary conditions may be applied:

— Translation fixation in x and z direction both sides, and in y direction at one side, at the intersection of the bulkhead deck to the side shell.
— Translation fixation i z direction for all nodes in way of transverse main firezone bulkheads, continuous pillars and other continuous vertical supporting structure, at bulkhead deck level. This is not relevant when hydrostatic sea pressure has been added to the global model according to [4.5].

4 Stillwater loads application

4.1 Light ship weight

The weight of the structure is obtained by applying density to the applied steel material. In order to be able to tune the position of the centre of gravity and verify the weight distribution in a simple way, different material densities can be used along the hull length. The whole analysis model should be in compliance with the actual light ship weight distribution. This often requires an iteration process for tuning the mass distribution.

The remaining light ship weight should be represented by concentrated mass components at the centre of gravity of each component.

All masses shall be attached to the surrounding structure.

4.2 Machinery and outfitting

All heavy machinery items (such as main engine, rudder, main generators, etc.) should be modelled as point masses attached to the surrounding structure at their correct locations. The weight of a component may be divided into several mass points if the component is too large (for instance the main machinery).

4.3 Deadweight and passenger loads

Deadweight and passenger loads may be represented by concentrated mass components at the centre of gravity of each component or as distributed pressure to the relevant deck areas.

4.4 Tank loads

The liquid mass in tanks should be represented by pressure loads or point mass components which are distributed to the node points at the tank base or boundary. It is not necessary to include the local pressure distribution of the tanks in the global FEM analysis.

4.5 Buoyancy loads

The still water hydrostatic pressure load should be applied to the wet part of the hull.

5 Dynamic loads application

5.1 General

There are several methods that can be used to achieve the required dynamic loads. These are split in two categories, the indirect method referred to as rule based loads and the direct method. For the latter, the loads are determined by direct wave load analysis, see [5.3]. In the indirect method a pressure is applied at the bottom of the FE model and the resulting bending moment shall approximate as close as possible the required rule bending moment and shear force distribution.

5.2 Rule based loads

To achieve the required vertical wave bending moment, a pressure load to the shell elements of the wet surface of the hull may be applied according to one of the two following methods:

1) to obtain a bending moment curve by applying pressure load on the wet surface, that is actually larger than the required within 0.4 *L* but approaching the required curve outside 0.4 *L*, see Figure 2.

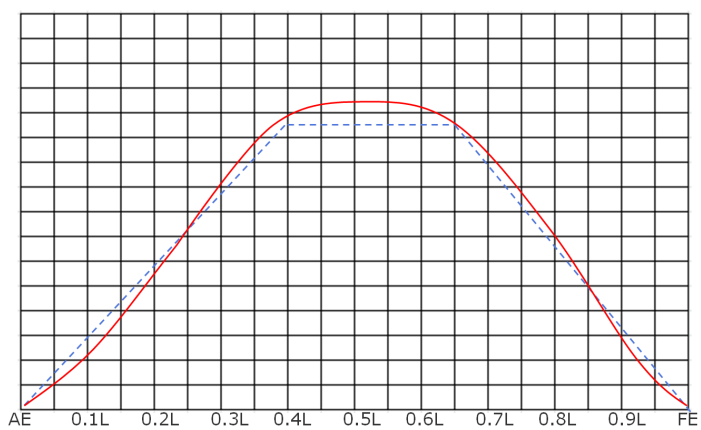

Figure 2 Rule limit curve and vertical wave bending moment based on surface pressure application on wet surface

2) to calculate using appropriate mathematical algorithms (e.g. Fourier series analysis) a pressure distribution that satisfies the rule curve for bending moment and for shear force.

5.3 Direct dynamic loads based on the equivalent design wave method

5.3.1 General

Equivalent design waves are determined by a direct wave load analysis and they can be used to calculate hull girder forces and moments corresponding to the rule requirements. Based on the direct analysis, the wave pressure loads, and accelerations have the same phase and this ensures a more realistic superposition of the different hull girder load components.

5.3.2 Load application for longitudinal strength assessment

As an alternative to rule based loads, see [5.2], the EDW method can be used to study the global strength of the hull structure by selecting the corresponding EDW that produces the required target vertical wave bending moment within 0,4 *L*for sagging and hogging. The advantages of using the EDW pressures and accelerations, are that the required vertical bending moment and shear forces are achieved with the vessel in balance hence there is no need to add additional external loads to balance the model. Because the EDW is a realistic wave, it may require more than one design wave to achieve the required moment distribution within 0.4 *L*. Outside 0.4 *L* there is no need to apply correction factors to the bending moments or shear forces as these are the realistic distributions.

With the direct wave load analysis the inertia loads and external pressures shall be in equilibrium to keep the reaction forces at a minimum. The sum of local loads along the hull needs to give the correct global response as well as local response for further stress evaluation.

5.4 Correction factors

Where the applied bending moment and shear force deviate from the rule required values, the stresses for these load cases shall be corrected before the yield, buckling and local strength checks.

The principle of scaling linearity can be used for sections that remain plane under bending. However, when the section does not remain plane i.e. the bending stress does not follow one linear slope, the correction factors to be applied shall be determined by appropriate methods.

The distribution of actual achieved bending moments and shear forces obtained over the length of the model should be compared with the required design bending moment and shear force distributions. Plots showing the comparison between the applied bending moment and shear force with the design required values should be produced.

6 Simplified global strength assessment method

Alternative methods to achieve the required rule bending moment distribution may be considered. One alternative method to what is described in [4] and [5] above is to apply a parametric line load which will produce the total moment from both the still water and wave bending moments. To determine the loads to be applied to the global model, the total bending moment ($M_S + M_W$) is differentiated twice. The first differentiation gives the shear force distribution ($Q = \mathrm{d}(M_S + M_W)/\mathrm{d}x$), while a second differentiation gives a line load ($q = \mathrm{d}Q/\mathrm{d}x$). This line load may be either applied in the ship's side as shearing load or as point/nodal forces in the ship's bottom structure at every web frame.

SECTION 4 LOCAL FE STRENGTH ASSESSMENT

1 Application

Local models, in addition to the global model, may be required for passenger ships as given in DNV-RU-SHIP Pt.5 Ch.4 Sec.4, where there are large hull openings, discontinuities or other highly stressed areas. The location and number of models required will be evaluated based on results from the global calculation.

2 Peak stress control

In order to control the size of the plasticity zones in way of openings in highly stresses areas, local models with fine mesh shall be evaluated. Because of the geometric irregularities and the high average stresses, the local stresses in way of openings will exceed the yield strength of the material and this may cause permanent plastic deformation.

In reality the peak stresses will be much lower than the ones predicted from the linear elastic analysis because of the re-distribution of the stresses in the adjacent area, after the material has reached its yield capacity. The condition for this is that the plasticity zone is limited in extent, hence the allowable peak stress criteria in the rules are valid for an 50 × 50 element size. In practice, a peak stress value more than yield represents a permanent strain in the material after the load has been removed. Since this local permanent strain does not represent ultimate failure of the hull girder, it can be accepted under extreme loads, provided its extent is limited according to DNV-RU-SHIP Pt.5 Ch.4 Sec.2 [5.4.1].

3 Shear stress control

It is important to evaluate the shear capacity of highly stressed areas with many openings. Especially, in main supporting longitudinal structure, such as longitudinal walls and side superstructure walls. This will ensure better control of openings and cut-outs such as cable, piping and ventilation penetrations in the bulkheads. Normally, designers indicates areas on the structural drawings where openings are not allowed or the percentage of allowed area reduction due to shear capacity limitations.

4 Pillar supporting structure

Where pillars are not continuous and stop on deck girders or other supporting structure, a local model may be necessary to document the strength of the supporting member and the local connection between the pillar and the support member.

SECTION 5 FATIGUE

1 Method and application

With reference to DNV-RU-SHIP Pt.5 Ch.4 Sec.2 [6], FE analysis by local FE or hot spot models may be required for a number of structural details. If required, [2] is relevant.

2 Fatigue capacity and strength representation

2.1 General

See DNV-RU-SHIP Pt.5 Ch.4 Sec.2 [6], DNV-RU-SHIP Pt.3 Ch.9, DNV-CG-0129 Sec.2 and DNV-CG-0129 Sec.3. The following subsections describe assumptions relevant for the fatigue assessment.

2.2 Loading condition for dynamic stress range

The vertical wave bending moment contributes the most to the stress range at free plate edges associated with corners of openings and cut-outs in the longitudinal bulkheads and decks.

2.3 Corrosive environment

For the structural details considered relevant in the upper part of the structure the time in corrosive environment as part of the minimum design life, T_{C25}, can be set to zero, i.e. the structural details are regarded as in air-environment during the whole life time.

2.4 Mean stress, f_{mean}

For passenger vessels, the majority of the critical details for fatigue is located above the hull girder neutral axis. These vessels are usually exposed to hogging stillwater moments only. The critical details will therefore be exposed to a mean stress level in tension, and a mean stress factor, f_{mean} = 1.0 should be applied.

2.5 Thickness effect, f_{thick} and S-N curves

For free plate edge, f_{thick} can be set to 1.0. S-N curve C should be used. In case of edge treatment B or B2 can be used.

In case of manual cutting, S-N curve C2 should be used. In case of edge treatment the S-N curve can be improved to C1. For welded details the thickness effect, f_{thick}, can be set to 1.0, and the hot spot S-N curve D (FAT 90) should be used.

2.6 Scantling approach factor, f_c

The FE models (global, local and hot spot) can be based on gross scantlings and the f_c should be set to 1.0.

2.7 Post weld treatment, f_w

Post-weld treatment of welded details should not be accounted for, in general, and f_w should be set to 1.0.

Use of f_W may be permitted only on specific locations where other means to increase the fatigue life are not possible.

2.8 Environmental factor, f_e

For world wide operation, f_e = 0.8, should be applied.

2.9 Fatigue damage calculation procedure

Based on the previous subsections, the step-wise fatigue assessment procedure is out-lined below.

In this procedure, the maximum allowed peak stress range for fatigue is found based on the selected S-N curve. The peak stresses obtained from the local FE models for the free plate edges can be used to calculate the usage factor against the allowable peak stress calculated as:

$$\text{usage factor} = \frac{\text{Peak stress FE}}{\text{Allowed peak stress}}$$

The usage factor of every opening/cut-out can then be plotted, giving a good representation of fatigue strength.

The method can be summarised by the following steps:

1) Calculate the total number of stress cycles, N_D:

$$N_D = \frac{31.557 \cdot 10^6}{4\log L} \cdot f_0 \cdot T_{DF}$$

N_D	=	total number of stress cycles experienced by ship during the design fatigue life, where 1/(4log$L$) is assumed as the zero up-crossing frequency
f_0	=	fraction of time at sea
	=	0.85, unless otherwise specified
T_{DF}	=	design fatigue life, minimum to be taken as 25 years.

2) Calculate the scaling down factor from 10^{-8} to 10^{-2} probability level, f_p, for the vertical wave bending moment, according to DNV-RU-SHIP Pt.3 Ch.4 Sec.4 [3].
3) Calculate f_p*, a corrected scaling down factor which excludes the non-linear effects in sagging wave bending moment and includes routing effects, see DNV-RU-SHIP Pt.3 Ch.4 Sec.4 [3]:

$$f_p^* = f_p \cdot Corr_{f_{nl}} \cdot Corr_{f_R}$$

$$Corr_{f_{nl}} = \frac{2}{\left(1 + 0.58 \cdot \left(\frac{(C_b + 0.7)}{C_b}\right)\right)}$$

$$Corr_{f_R} = \frac{f_R}{0.85}$$

$$f_R = 0.76$$

4) Calculate the corresponding Weibull shape parameter, $\xi^* = \text{Log}_{10}(0.25)/\text{Log}_{10}(f_p^*)$.
5) Interpolate from DNV-CG-0129 App.C Table 4 for the Weibull shape parameter ξ^* and the stress cycles calculated above, to find the fatigue stress range, $\Delta\sigma_{FS,}$ at 10^{-8} probability level, for the C S-N curve without edge treatment.

6) Calculate the permissible stress range, $\Delta\sigma_{perm}$, at 10^{-8} probability level as:

$$\Delta\sigma_{perm} = \frac{\Delta\sigma_{FS}}{f_{mean} \cdot f_{thick} \cdot f_{material} \cdot f_w \cdot f_c \cdot f_e}$$

7) If only FE stress results from the maximum hogging load case are available, a correction factor for the stress range should be calculated according to $K = (-M_{wv\text{-}s} + M_{wv\text{-}h})/(M_{sw\text{-}h} + M_{wv\text{-}h})$. The permissible stress is then $\Delta\sigma_{perm}/K$.

$M_{wv\text{-}s}$ = the vertical wave bending moment in sagging according to DNV-RU-SHIP Pt.3 Ch.4 Sec.4 [3], without non-linear adjustments, i.e $f_{nl\text{-}vs} = 1.0$.

$M_{wv\text{-}h}$ = the vertical wave bending moment in hogging according to DNV-RU-SHIP Pt.3 Ch.4 Sec.4 [3].

$M_{sw\text{-}h}$ = the vertical stillwater bending moment in hogging.

8) Fatigue criteria for FE screening is then $\Delta\sigma_{FEM} < \Delta\sigma_{perm}/K$.

For a different class of S-N curve than C or B2, a numerical solution for the stress range $\Delta\sigma$ can be found by setting $D = 1.0$ in the closed form expression of the damage using a two slope S-N curve given in DNV-CG-0129 App.C [2.3]. Care should be used in the definition of the Gamma functions, which are software dependent, i.e. the numbers in DNV-CG-0129 App.C Table 4 should first be reproduced for known input values.

CHANGES – HISTORIC

July 2018 edition

Changes July 2018, entering into force as from date of publication

Topic	*Reference*	*Description*
General clarification	Sec.2 [1.4]	"Maximum vertical shear force" loadcase added for global finite element analysis (FEA), since some designers may split vertical bending moment (VBM) and shear force (SF) case.
	Sec.4 [4]	Possible local FE scope for special pillar supporting structure is defined.
Dynamic load application clarification and hull girder wave bending moment UR S11	Sec.3 [5.1]	General part modified for clarification of dynamic load application. To methods described, rule based and direct method, supporting the rule change proposal in DNVGL-RU-SHIP Pt.5 Ch.4 Sec.2.
	Sec.3 [5.2]	Load application based on rule based method.
	Sec.3 [5.3]	Load application based on equivalent design wave (EDW) method.

February 2016 edition

This is a new document.

About DNV

DNV is the independent expert in risk management and assurance, operating in more than 100 countries. Through its broad experience and deep expertise DNV advances safety and sustainable performance, sets industry benchmarks, and inspires and invents solutions.

Whether assessing a new ship design, optimizing the performance of a wind farm, analyzing sensor data from a gas pipeline or certifying a food company's supply chain, DNV enables its customers and their stakeholders to make critical decisions with confidence.

Driven by its purpose, to safeguard life, property, and the environment, DNV helps tackle the challenges and global transformations facing its customers and the world today and is a trusted voice for many of the world's most successful and forward-thinking companies.

WHEN TRUST MATTERS