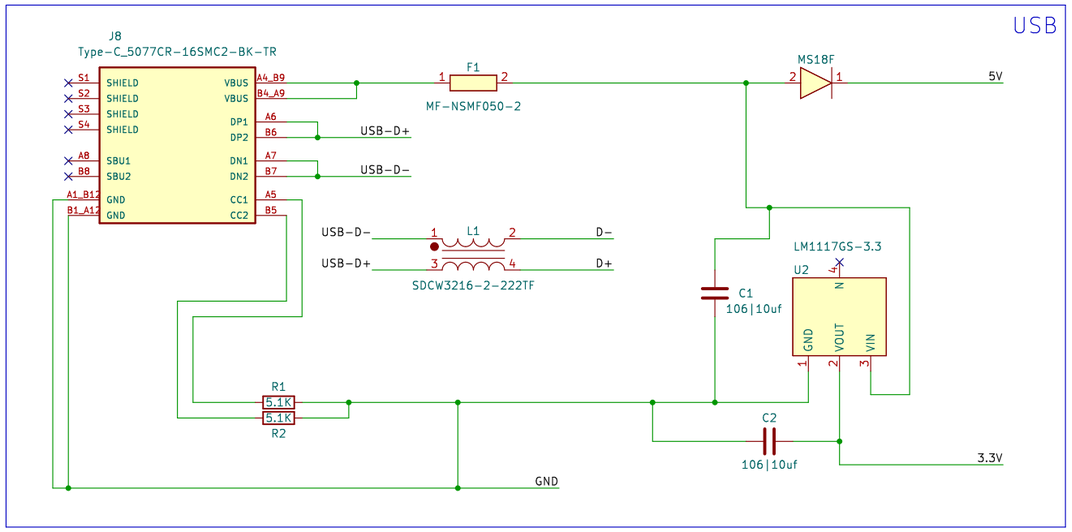

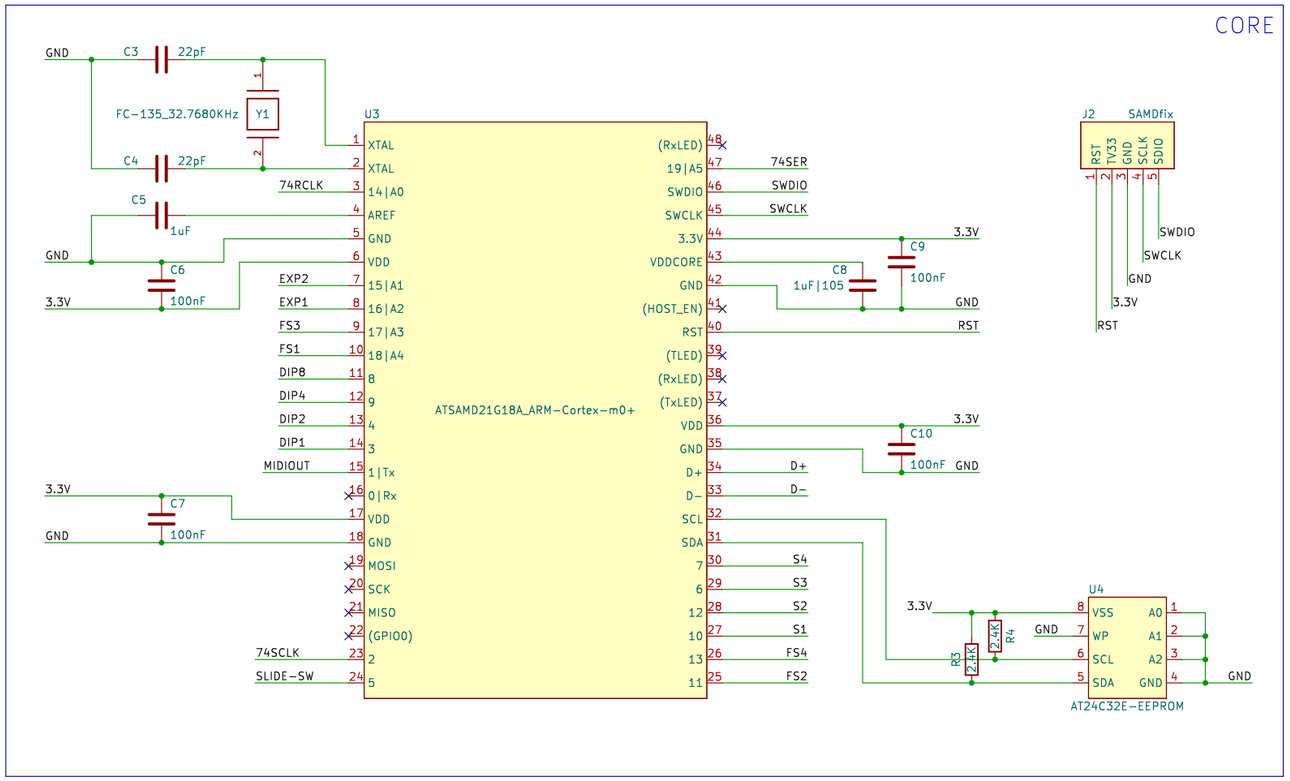

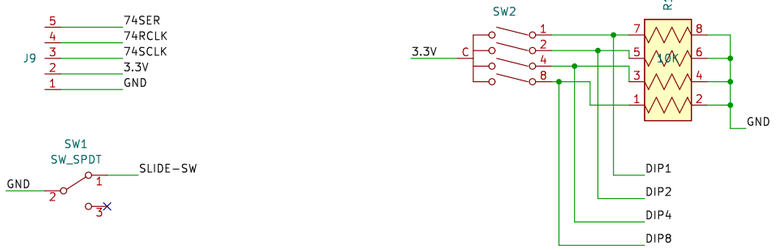

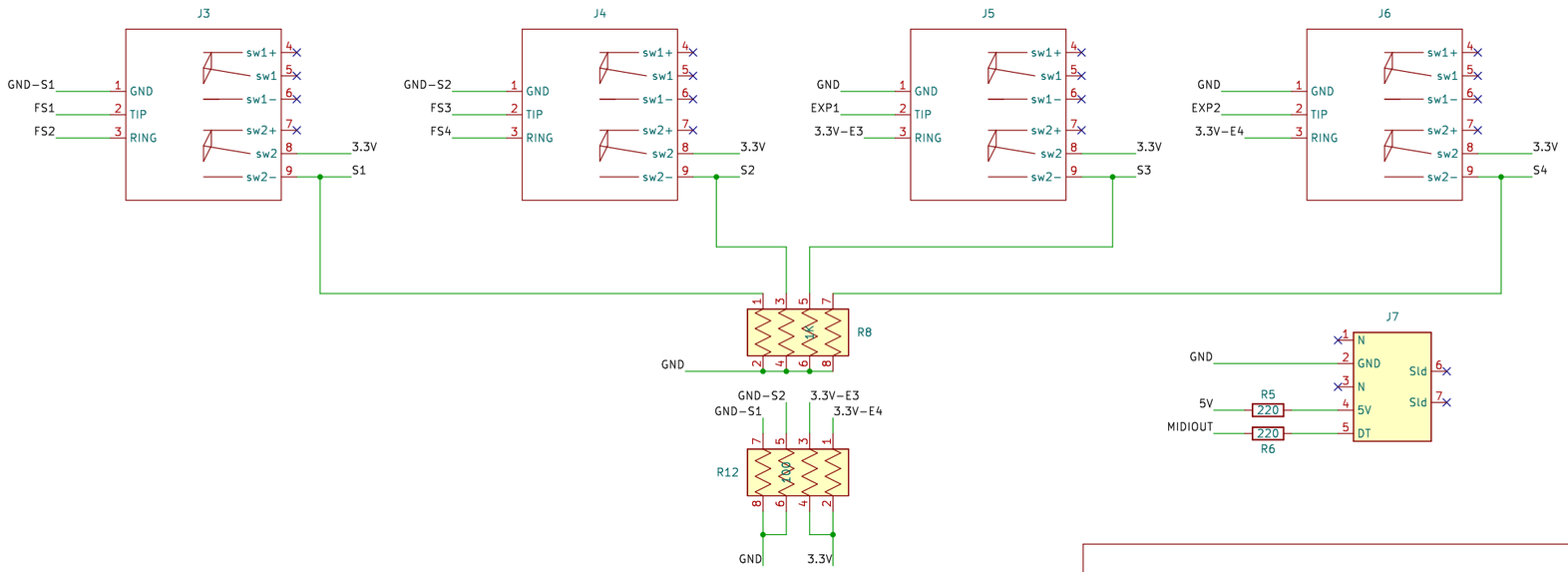

License : MIT
Some Rights Reserved

Turm Design Works LLC.

Sheet: /
File: fub.kicad_sch

Title: fub.*~

Size: A3	Date: 2024-04-18	**Rev: 0.1**
KiCad E.D.A. kicad 7.0.7		Id: 1/1