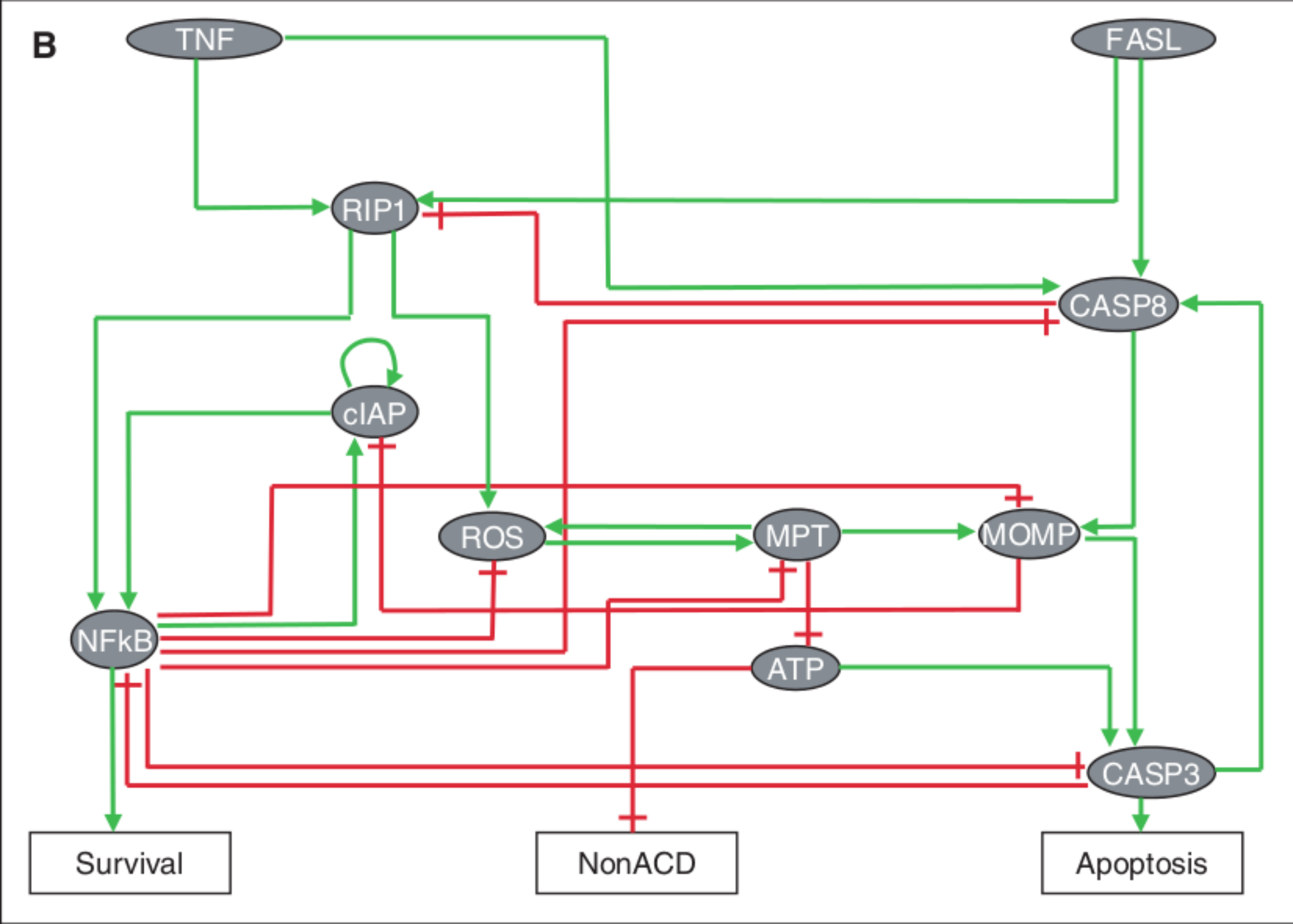
B
TNF
FASL
RIP1
CASP8
cIAP
ROS
MPT
MOMP
NFkB
ATP
CASP3
Survival
NonACD
Apoptosis