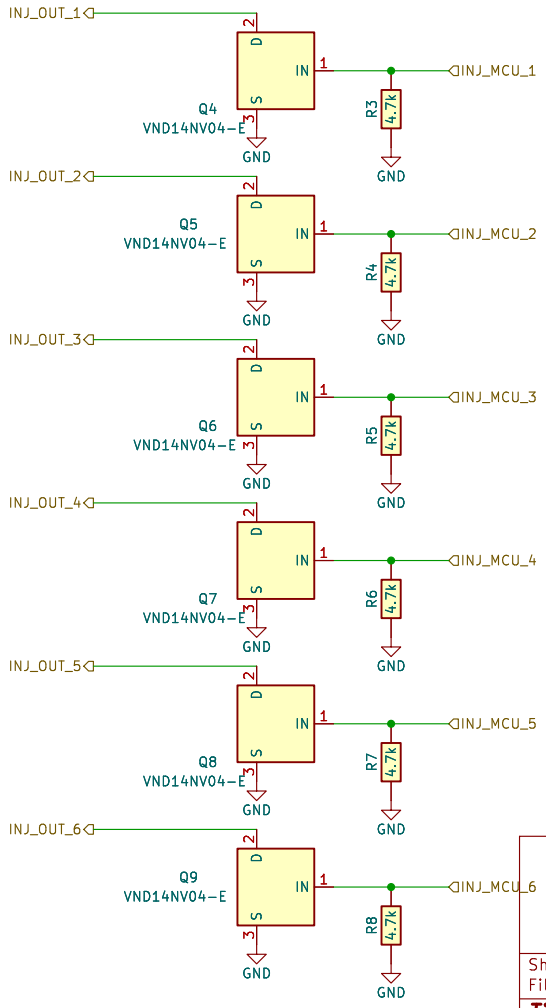

Sheet: /Injectors/
File: Injectors.kicad_sch

Title:

Size: A4	Date:	Rev:
KiCad E.D.A. 8.0.7		Id: 2/6

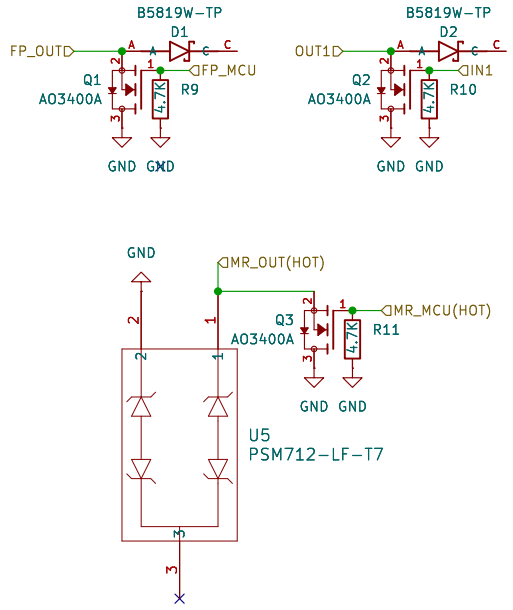

Sheet: /LOWSIDE WEAK/
File: LSweak.kicad_sch

Title:

Size: A4	Date:	Rev:
KiCad E.D.A. 8.0.7		Id: 4/6

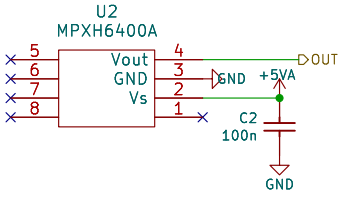

Sheet: /MAP/
File: map.kicad_sch

Title:

Size: A4	Date:	**Rev:**
KiCad E.D.A. 8.0.7		Id: 5/6

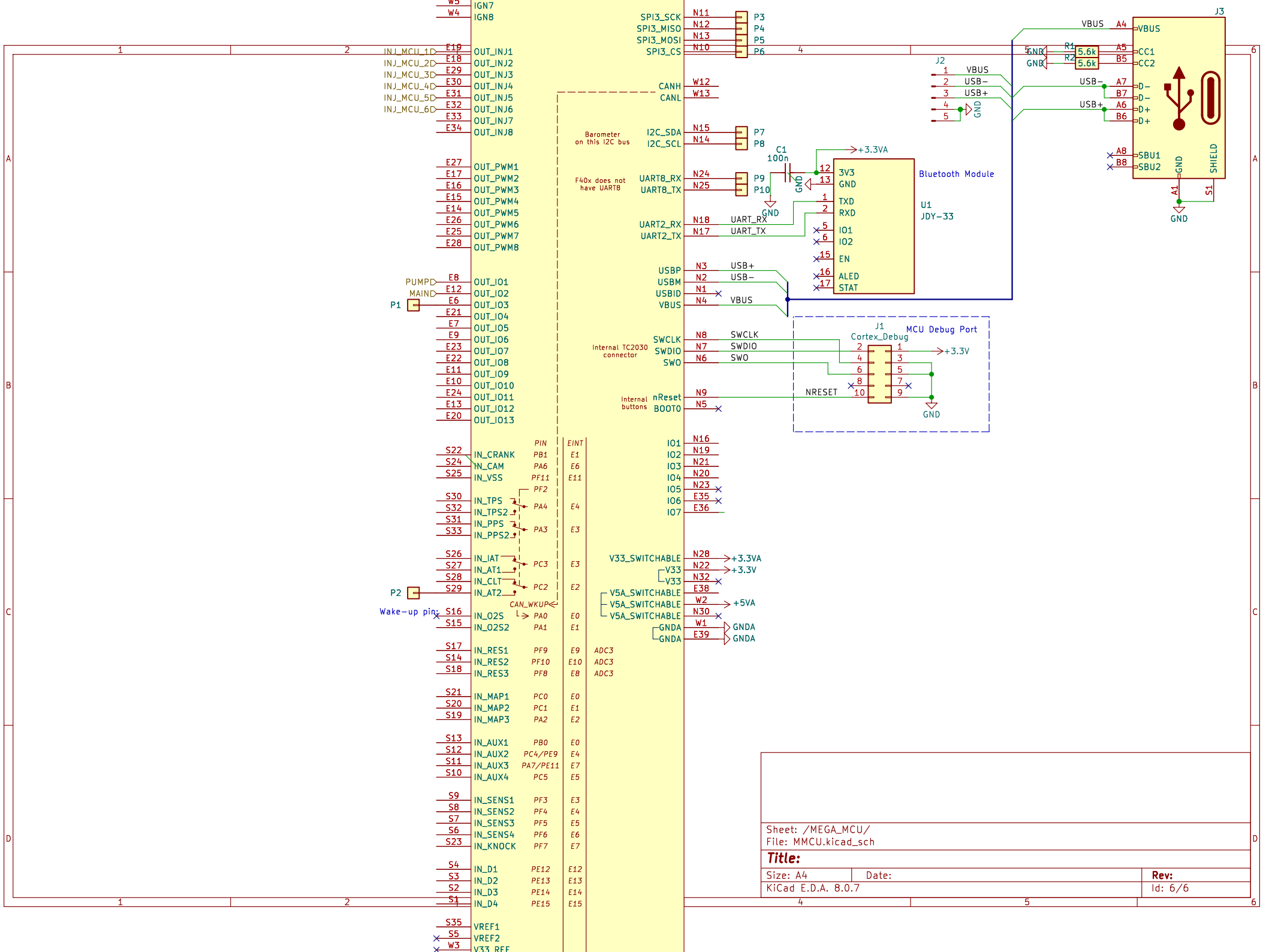
IGN7
IGN8
OUT_INJ1
OUT_INJ2
OUT_INJ3
OUT_INJ4
OUT_INJ5
OUT_INJ6
OUT_INJ7
OUT_INJ8
OUT_PWM1
OUT_PWM2
OUT_PWM3
OUT_PWM4
OUT_PWM5
OUT_PWM6
OUT_PWM7
OUT_PWM8
OUT_IO1
OUT_IO2
OUT_IO3
OUT_IO4
OUT_IO5
OUT_IO6
OUT_IO7
OUT_IO8
OUT_IO9
OUT_IO10
OUT_IO11
OUT_IO12
OUT_IO13
IN_CRANK
IN_CAM
IN_VSS
IN_TPS
IN_TPS2
IN_PPS
IN_PPS2
IN_IAT
IN_AT1
IN_CLT
IN_AT2
IN_O2S
IN_O2S2
IN_RES1
IN_RES2
IN_RES3
IN_MAP1
IN_MAP2
IN_MAP3
IN_AUX1
IN_AUX2
IN_AUX3
IN_AUX4
IN_SENS1
IN_SENS2
IN_SENS3
IN_SENS4
IN_KNOCK
IN_D1
IN_D2
IN_D3
IN_D4
VREF1
VREF2
V33_REF
PIN
EINT
CAN_WKUP
ADC3
INJ_MCU_1
INJ_MCU_2
INJ_MCU_3
INJ_MCU_4
INJ_MCU_5
INJ_MCU_6
PUMP
MAIN
P1
P2
Wake-up pin:
SPI3_SCK
SPI3_MISO
SPI3_MOSI
SPI3_CS
P3
P4
P5
P6
CANH
CANL
Barometer on this I2C bus
I2C_SDA
I2C_SCL
P7
P8
F40x does not have UART8
UART8_RX
UART8_TX
P9
P10
UART2_RX
UART2_TX
UART_RX
UART_TX
USBP
USBM
USBID
VBUS
USB+
USB-
SWCLK
SWDIO
SWO
Internal TC2030 connector
nReset
BOOT0
Internal buttons
IO1
IO2
IO3
IO4
IO5
IO6
IO7
V33_SWITCHABLE
V33
V5A_SWITCHABLE
GNDA
+3.3VA
+3.3V
+5VA
C1
100n
GND
3V3
TXD
RXD
EN
ALED
STAT
Bluetooth Module
U1
JDY-33
J2
J3
J1
Cortex_Debug
MCU Debug Port
NRESET
R1
R2
5.6k
CC1
CC2
D-
D+
SBU1
SBU2
SHIELD
S1
Sheet: /MEGA_MCU/
File: MMCU.kicad_sch
Title:
Size: A4
Date:
Rev:
KiCad E.D.A. 8.0.7
Id: 6/6

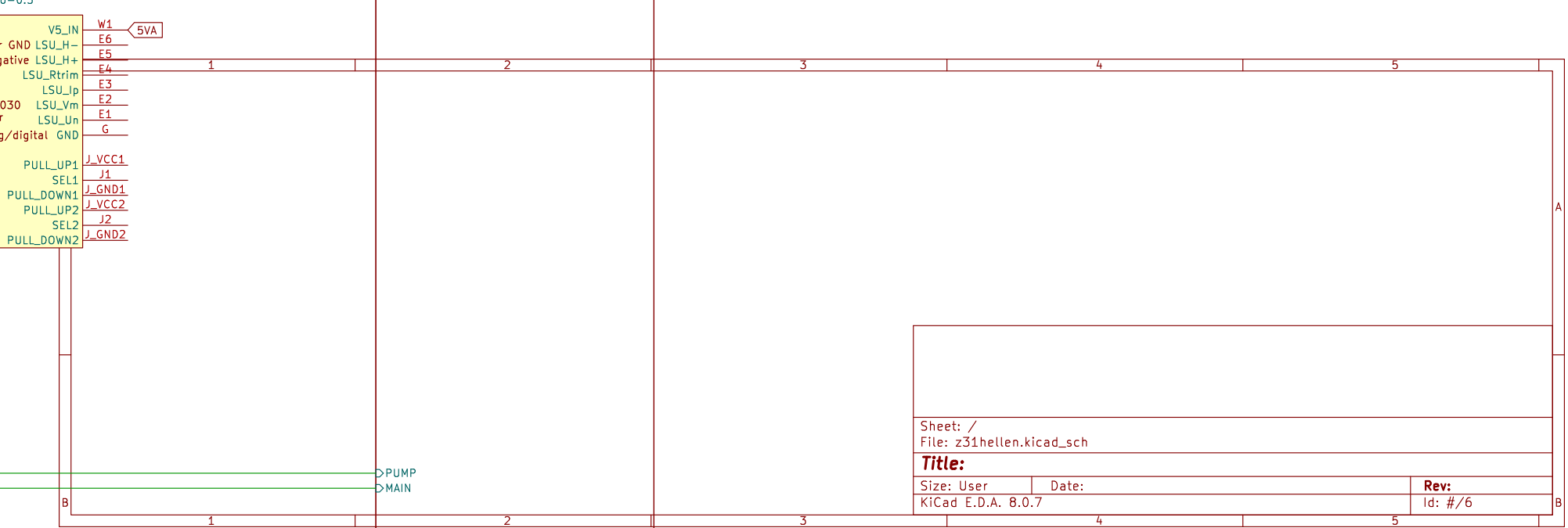
V5_IN
GND LSU_H−
gative LSU_H+
LSU_Rtrim
LSU_Ip
030 LSU_Vm
r LSU_Un
g/digital GND
PULL_UP1
SEL1
PULL_DOWN1
PULL_UP2
SEL2
PULL_DOWN2
W1
E6
E5
E4
E3
E2
E1
G
J_VCC1
J1
J_GND1
J_VCC2
J2
J_GND2
5VA
PUMP
MAIN
1
2
3
4
5
A
B
Sheet: /
File: z31hellen.kicad_sch
Title:
Size: User
Date:
Rev:
KiCad E.D.A. 8.0.7
Id: #/6

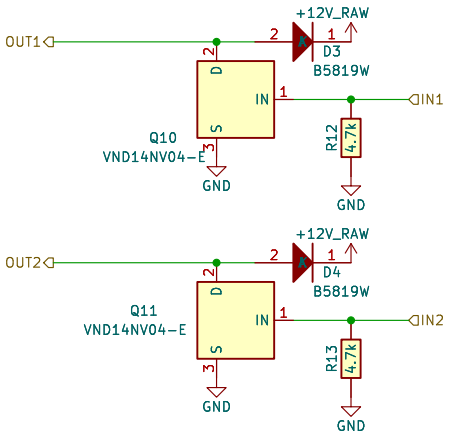

Sheet: /LOWSIDE/
File: LS.kicad_sch

Title:

Size: A4	Date:	**Rev:**
KiCad E.D.A. 8.0.7		Id: LOWSIDE/6