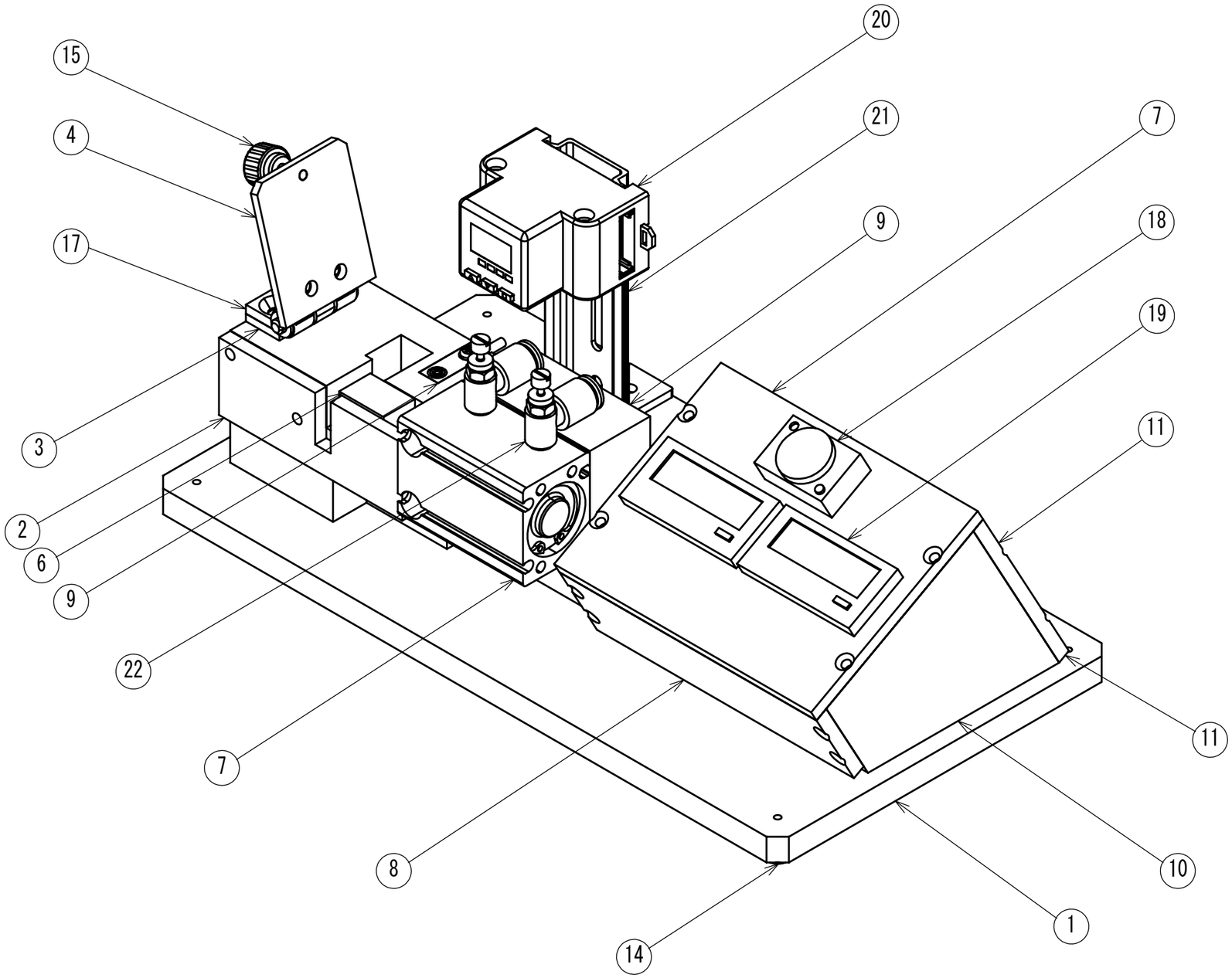

ITEM NO.	PART NUMBER	DESCRIPTION	QTY.
1	L4SA43-2531	MAIN BASE	1
2	L4SA43-2532	COVER	1
3	L4SA43-2533	ADAPTER HINGE	1
4	L4SA43-2534	COVER PRODUCT	1
5	L4SA43-2535	PUSHER1	1
6	L4SA43-2536	PUSHER2	1
7	L4SA43-2518	COVER TOP	1
8	L4SA43-2519	COVER FRONT	1
9	L3SA43-2530	BASE PRODUCT	1
10	L4SA43-2520	COVER SIDE	2
11	L4SA43-2521	COVER BACK	1
12	BCTA25X5-B	CYLINDER	1
13	PSFJ3-15	LOCATING PINS	2
14	C-30-RK-10	RUBBER FEET	4
15	C-NBM4-10	PLASTIC KNOB SCREWS	1
16	C-MPXSR-2-T8	PROXIMITY SENSOR	1
17	C-HHCSNC5	ALUMINUM HINGES	1
18	M2BJ-BH24D	BUZZER	1
19	H7EC-N	COUNTER	2
20	ZL2-ZLL1-3LK	LINEAR MAGNETIC SENSOR	1
21	DNR274-100	RADIN RAILS	1
22	SPJNL6-M5-W	FITTING	2

ASSEMBLY RE-TRANER CONNECTOR

MODEL DC010

RE-TRAINER CONNECTOR

No	PART NAME	MATERIAL	FINISH	Q'ty	DESCRIPTION	MACHINE HISTORY

DATE	15 AUG'24
BLOCK NAME	ASSEMBLY
SCALE	1:1.5
RANK	
LOT NO.	

APR.	CH.	DE.	DR.	DWG. NO.
		KRITSADA	KRITSADA	L3SA43-2501

NOTE

CODE	NOTES	DATE	B Y
	REVISIONS		

L4SA43-2501

ASA3V01

8/20/2024MTL91223