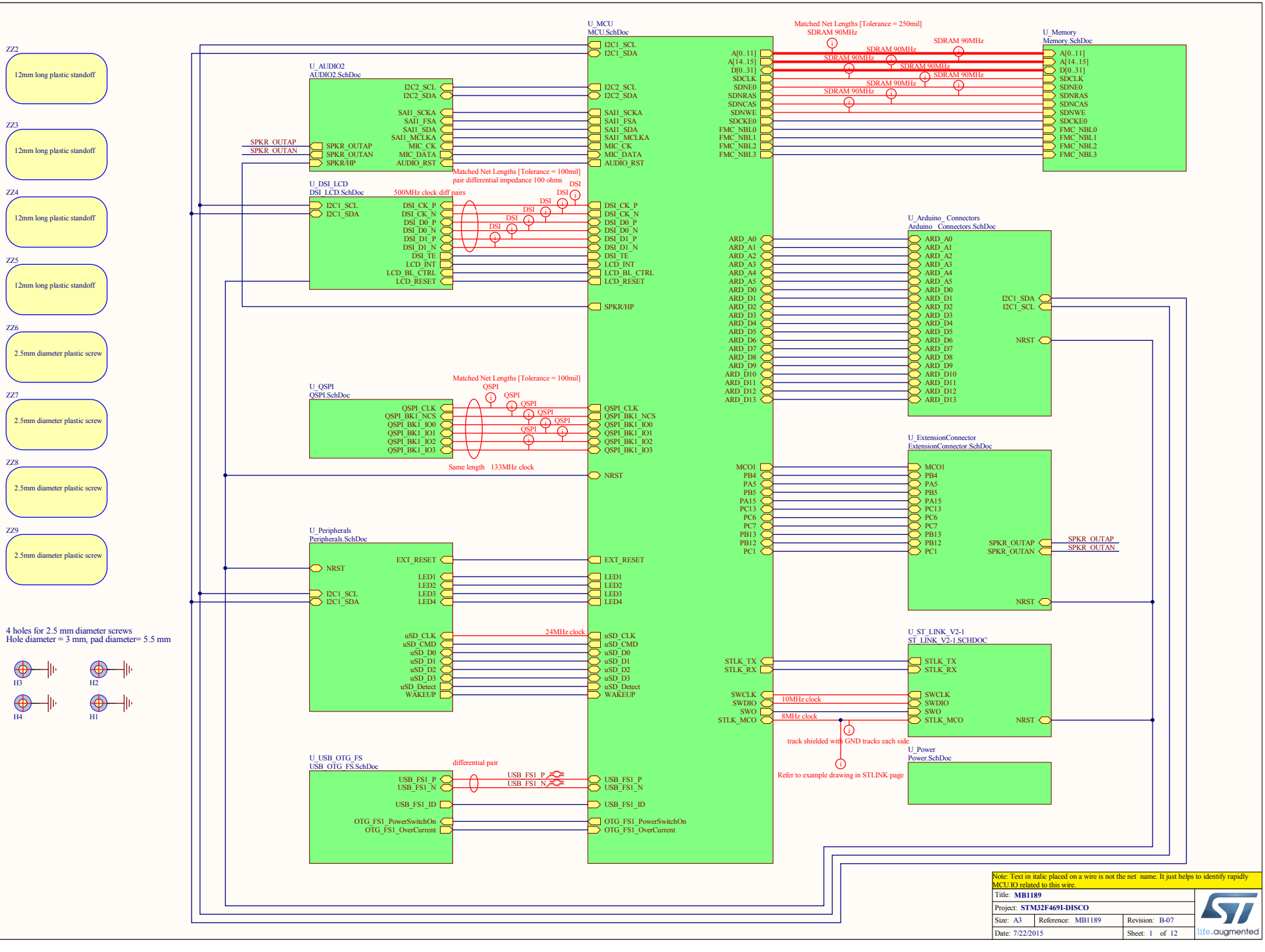
ZZ2
12mm long plastic standoff
ZZ3
12mm long plastic standoff
ZZ4
12mm long plastic standoff
ZZ5
12mm long plastic standoff
ZZ6
2.5mm diameter plastic screw
ZZ7
2.5mm diameter plastic screw
ZZ8
2.5mm diameter plastic screw
ZZ9
2.5mm diameter plastic screw
4 holes for 2.5 mm diameter screws
Hole diameter = 3 mm, pad diameter= 5.5 mm
H3
H2
H4
H1
U_MCU
MCU.SchDoc
U_AUDIO2
AUDIO2.SchDoc
U_DSI_LCD
DSI_LCD.SchDoc
U_QSPI
QSPI.SchDoc
U_Peripherals
Peripherals.SchDoc
U_USB_OTG_FS
USB_OTG_FS.SchDoc
U_Memory
Memory.SchDoc
U_Arduino_ Connectors
Arduino_ Connectors.SchDoc
U_ExtensionConnector
ExtensionConnector.SchDoc
U_ST_LINK_V2-1
ST_LINK_V2-1.SCHDOC
U_Power
Power.SchDoc
Matched Net Lengths [Tolerance = 250mil]
SDRAM 90MHz
Matched Net Lengths [Tolerance = 100mil]
pair differential impedance 100 ohms
500MHz clock diff pairs
Same length 133MHz clock
24MHz clock
10MHz clock
8MHz clock
track shielded with GND tracks each side.
Refer to example drawing in STLINK page
differential pair
Note: Text in italic placed on a wire is not the net name. It just helps to identify rapidly MCU IO related to this wire.
Title: MB1189
Project: STM32F469I-DISCO
Size: A3
Reference: MB1189
Revision: B-07
Date: 7/22/2015
Sheet: 1 of 12
life.augmented

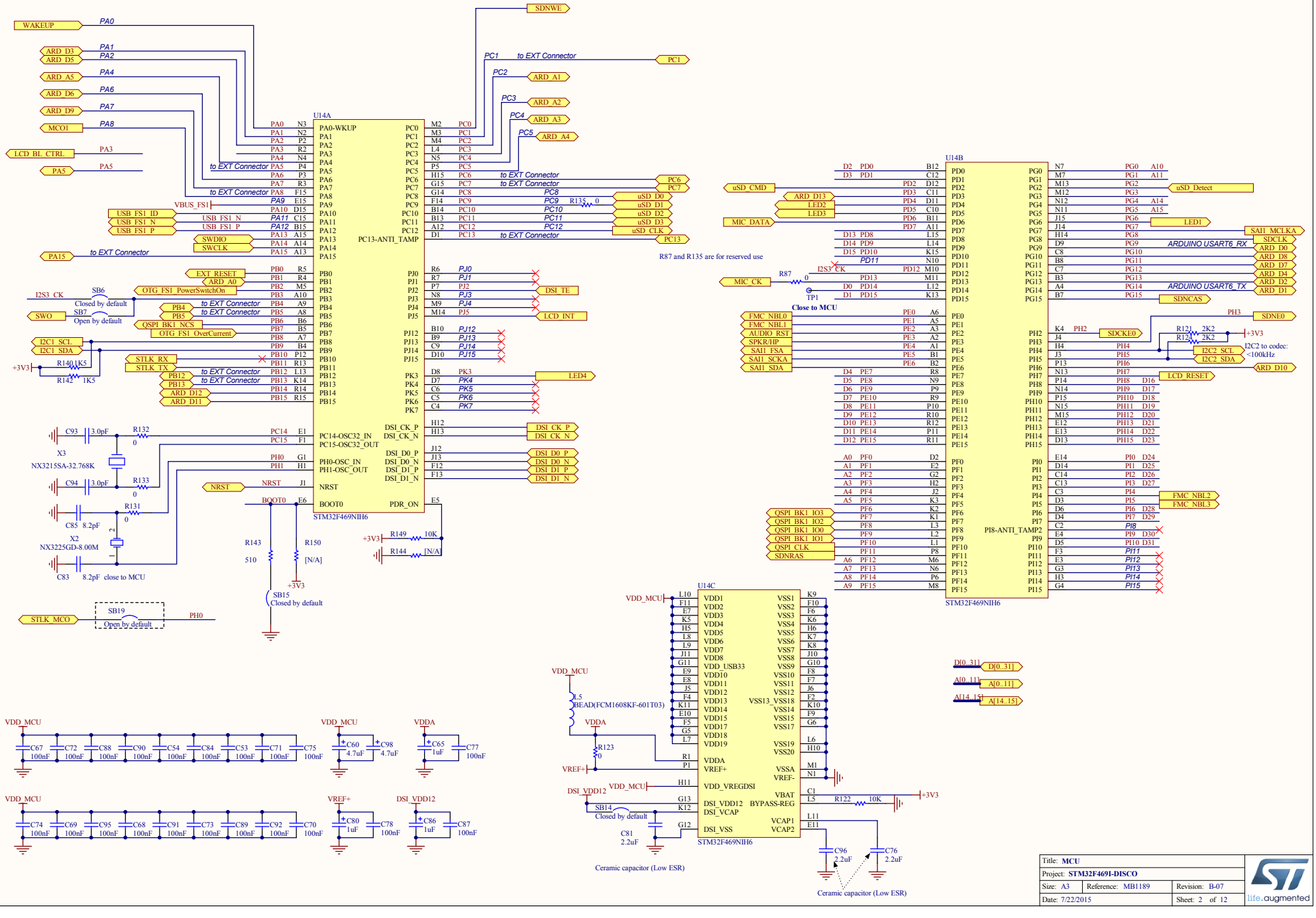
U14A
STM32F469NIH6
U14B
STM32F469NIH6
U14C
STM32F469NIH6
PA0-WKUP
PC13-ANTI_TAMP
PC14-OSC32_IN
PC15-OSC32_OUT
PH0-OSC_IN
PH1-OSC_OUT
NRST
BOOT0
PDR_ON
PI8-ANTI_TAMP2
WAKEUP
ARD_D3
ARD_D5
ARD_A5
ARD_D6
ARD_D9
MCO1
LCD_BL_CTRL
PA5
VBUS_FS1
USB_FS1_ID
USB_FS1_N
USB_FS1_P
SWDIO
SWCLK
PA15
EXT_RESET
ARD_A0
OTG_FS1_PowerSwitchOn
I2S3_CK
SB6
Closed by default
SWO
SB7
Open by default
QSPI_BK1_NCS
OTG_FS1_OverCurrent
I2C1_SCL
I2C1_SDA
STLK_RX
STLK_TX
ARD_D12
ARD_D11
SDNWE
PC1
to EXT Connector
ARD_A1
ARD_A2
ARD_A3
ARD_A4
PC6
PC7
uSD_D0
uSD_D1
uSD_D2
uSD_D3
uSD_CLK
PC13
R135
DSI_TE
LCD_INT
LED4
DSI_CK_P
DSI_CK_N
DSI_D0_P
DSI_D0_N
DSI_D1_P
DSI_D1_N
NRST
BOOT0
R143
510
R150
[N/A]
R149
10K
R144
[N/A]
+3V3
SB15
Closed by default
C93
3.0pF
R132
0
X3
NX3215SA-32.768K
C94
3.0pF
R133
0
C85
8.2pF
R131
0
X2
NX3225GD-8.00M
C83
8.2pF
close to MCU
STLK_MCO
SB19
Open by default
PH0
uSD_CMD
ARD_D13
LED2
LED3
MIC_DATA
MIC_CK
R87
0
TP1
Close to MCU
FMC_NBL0
FMC_NBL1
AUDIO_RST
SPKR/HP
SAI1_FSA
SAI1_SCKA
SAI1_SDA
QSPI_BK1_IO3
QSPI_BK1_IO2
QSPI_BK1_IO0
QSPI_BK1_IO1
QSPI_CLK
SDNRAS
uSD_Detect
LED1
SAI1_MCLKA
SDCLK
ARDUINO USART6_RX
ARD_D0
ARD_D8
ARD_D7
ARD_D4
ARD_D2
ARD_D1
ARDUINO USART6_TX
SDNCAS
PH3
SDNE0
SDCKE0
R121
2K2
R124
2K2
I2C2 to codec:
<100kHz
I2C2_SCL
I2C2_SDA
ARD_D10
LCD_RESET
FMC_NBL2
FMC_NBL3
D[0..31]
A[0..11]
A[14..15]
VDD_MCU
VDDA
VREF+
DSI_VDD12
L5
BEAD(FCM1608KF-601T03)
R123
0
VDD_VREGDSI
DSI_VDD12
DSI_VCAP
DSI_VSS
VSS13_VSS18
VBAT
BYPASS-REG
VCAP1
VCAP2
R122
10K
SB14
Closed by default
C81
2.2uF
C96
2.2uF
C76
2.2uF
Ceramic capacitor (Low ESR)
Ceramic capacitor (Low ESR)
C67 100nF
C72 100nF
C88 100nF
C90 100nF
C54 100nF
C84 100nF
C53 100nF
C71 100nF
C75 100nF
C60 4.7uF
C98 4.7uF
C65 1uF
C77 100nF
C74 100nF
C69 100nF
C95 100nF
C68 100nF
C91 100nF
C73 100nF
C89 100nF
C92 100nF
C70 100nF
C80 1uF
C78 100nF
C86 1uF
C87 100nF
Title: MCU
Project: STM32F469I-DISCO
Size: A3
Reference: MB1189
Revision: B-07
Date: 7/22/2015
Sheet: 2 of 12
life.augmented

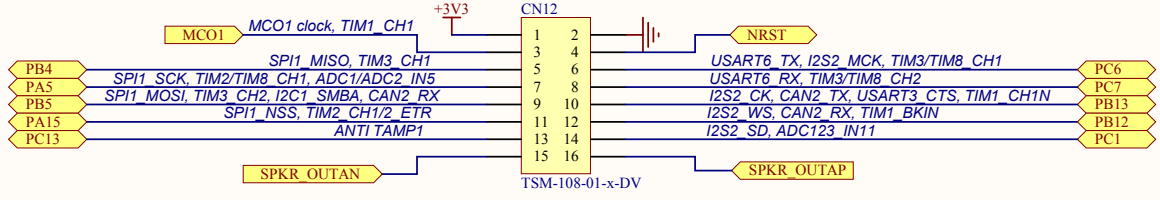

post heigth: 5.84mm

Extension connector interfaces

Title: **Extension Connectors**		
Project: **STM32F469I-DISCO**		
Size: A4	Reference: MB1189	Revision: B-07
Date: 7/22/2015		Sheet: 3 of 12

life.augmented

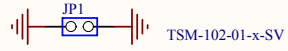

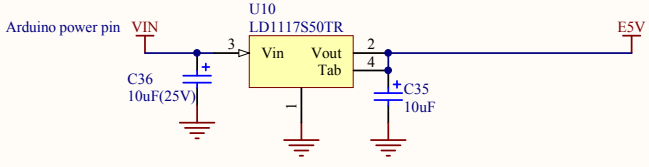

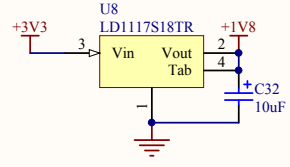

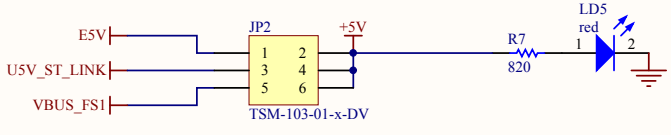

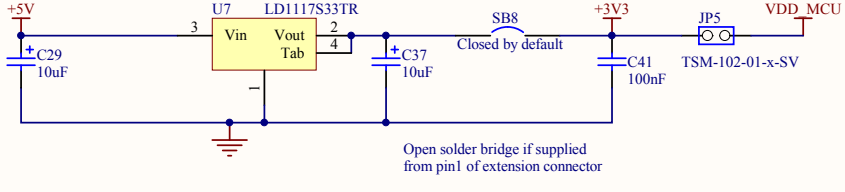

Title: **Power**		
Project: **STM32F469I-DISCO**		
Size: A4	Reference: MB1189	Revision: B-07
Date: 7/22/2015		Sheet: 4 of 12

life.augmented

Button

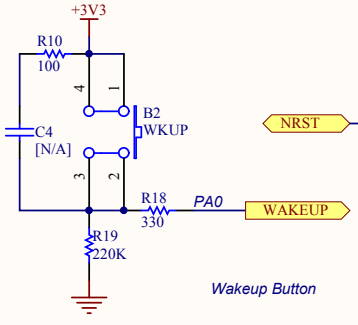

Wakeup Button

Reset Button

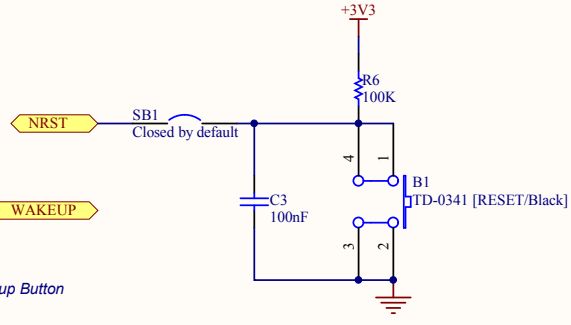

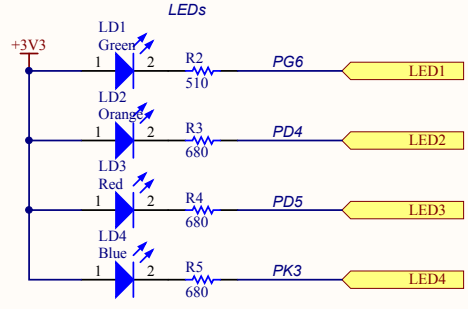

The 4 LEDs are top side

MICRO SD (TF) Card

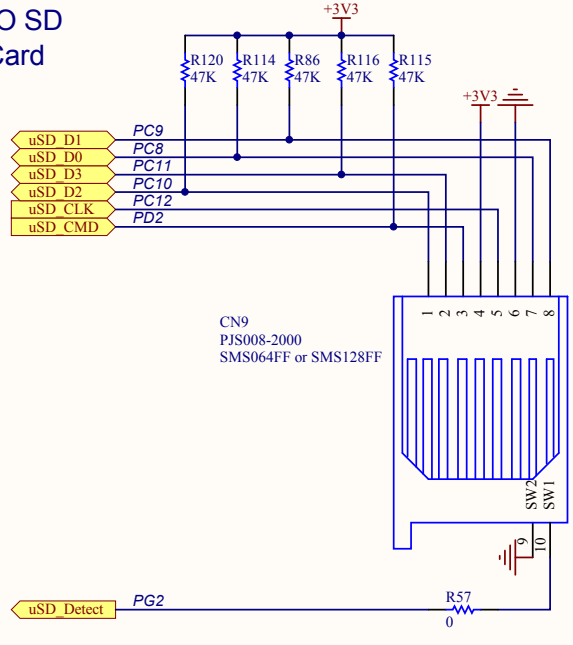

EXT/RF E2P Connector

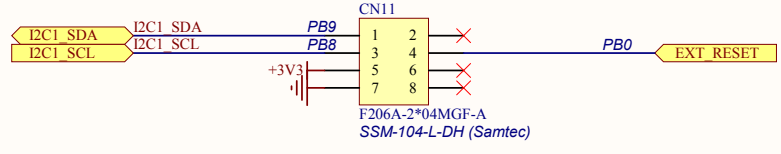

Title: **Peripherals**		
Project: **STM32F469I-DISCO**		
Size: A4	Reference: MB1189	Revision: B-07
Date: 7/22/2015		Sheet: 5 of 12

life.augmented

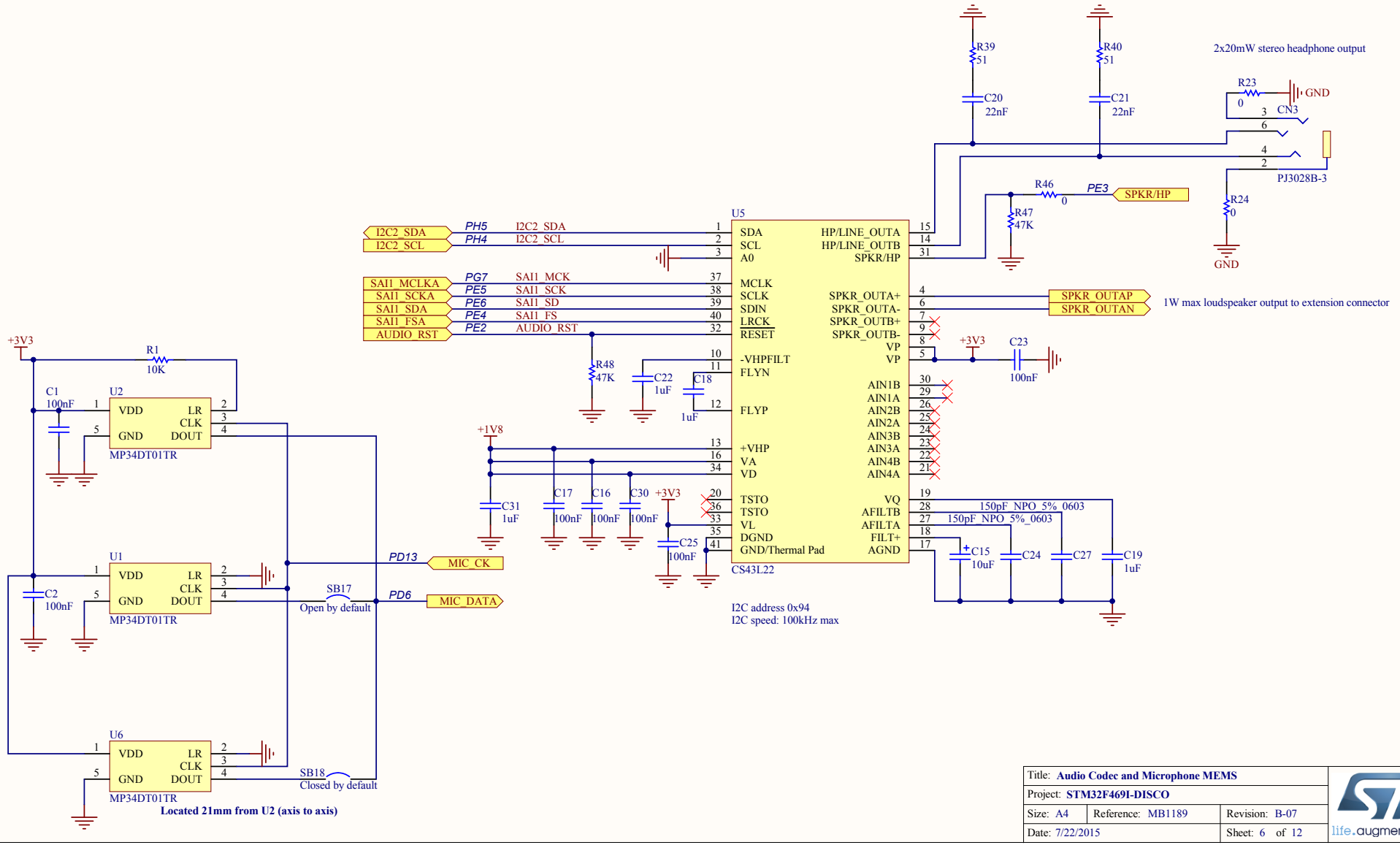

Title: **Audio Codec and Microphone MEMS**		
Project: **STM32F469I-DISCO**		
Size: A4	Reference: MB1189	Revision: B-07
Date: 7/22/2015		Sheet: 6 of 12

life.augmented

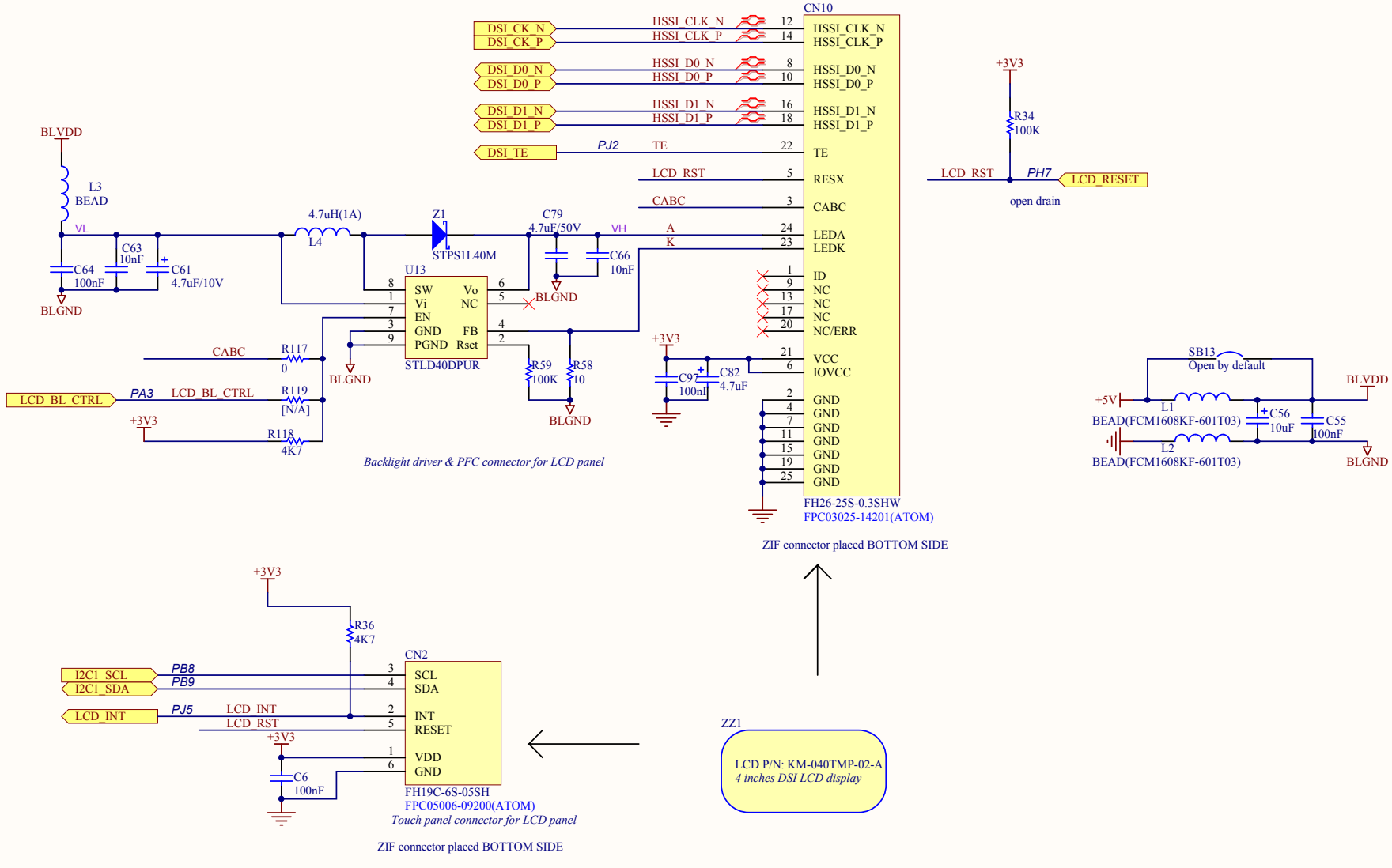

I2C Address:0x54

Mechanical: 2 Slots in PCB for the 2 flex from LCD

Title: **4 inch DSI LCD board**		
Project: **STM32F469I-DISCO**		
Size: A4	Reference: MB1189	Revision: B-07
Date: 7/22/2015		Sheet: 7 of 12

life.augmented

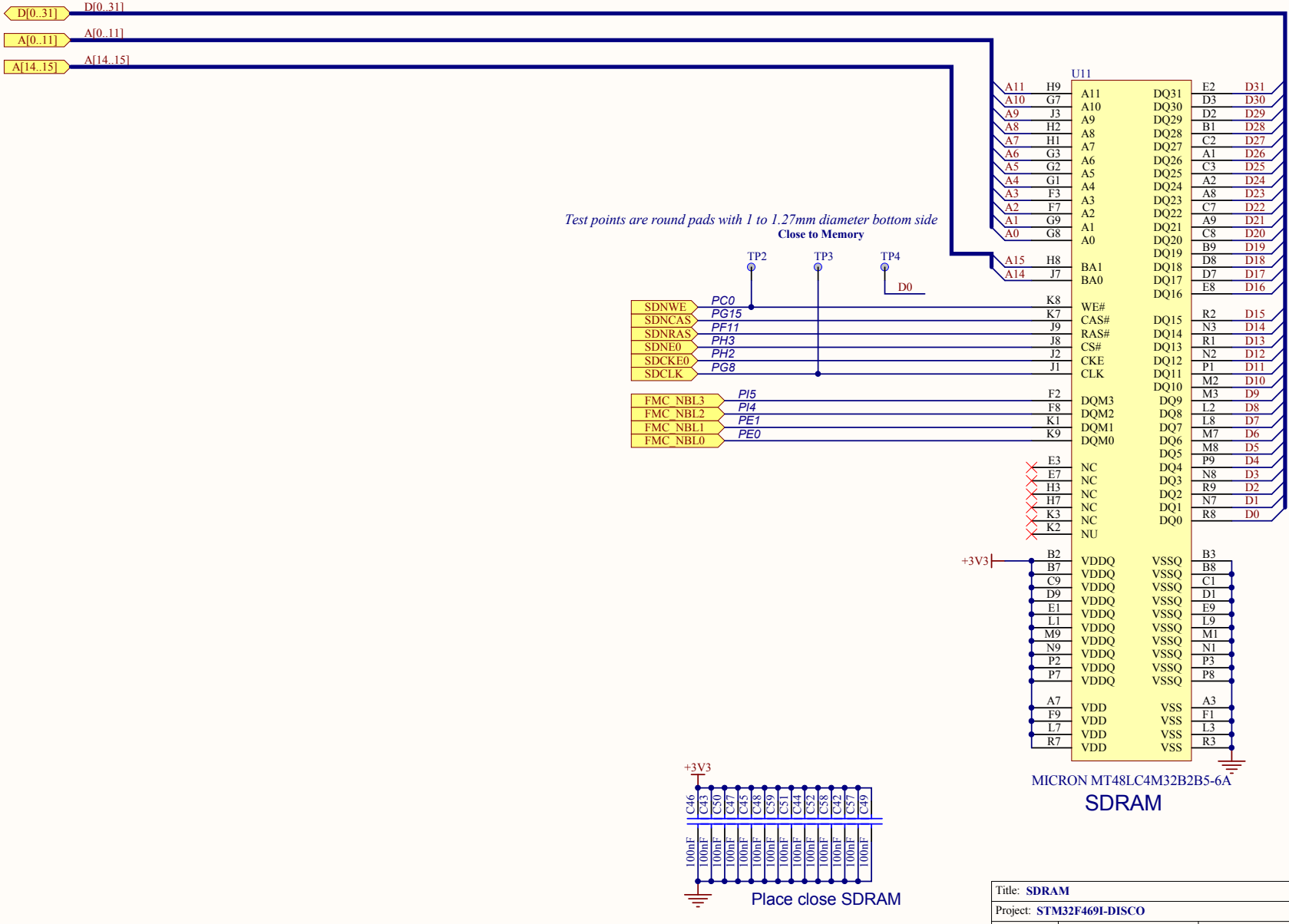

Title: **SDRAM**		
Project: **STM32F469I-DISCO**		
Size: A4	Reference: MB1189	Revision: B-07
Date: 7/22/2015		Sheet: 8 of 12

life.augmented

Test points are round pads with 1 to 1.27mm diameter bottom side

Close to QSPI memory

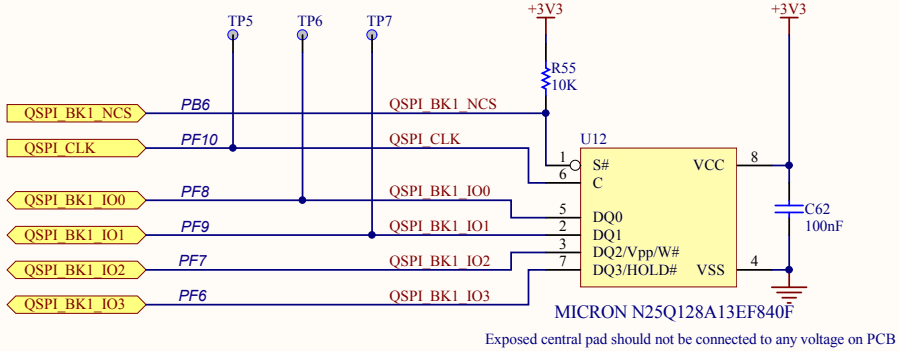

MICRON N25Q128A13EF840F

Exposed central pad should not be connected to any voltage on PCB

Title: **QSPI**		
Project: **STM32F469I-DISCO**		
Size: A4	Reference: MB1189	Revision: B-07
Date: 7/22/2015		Sheet: 9 of 12

life.augmented

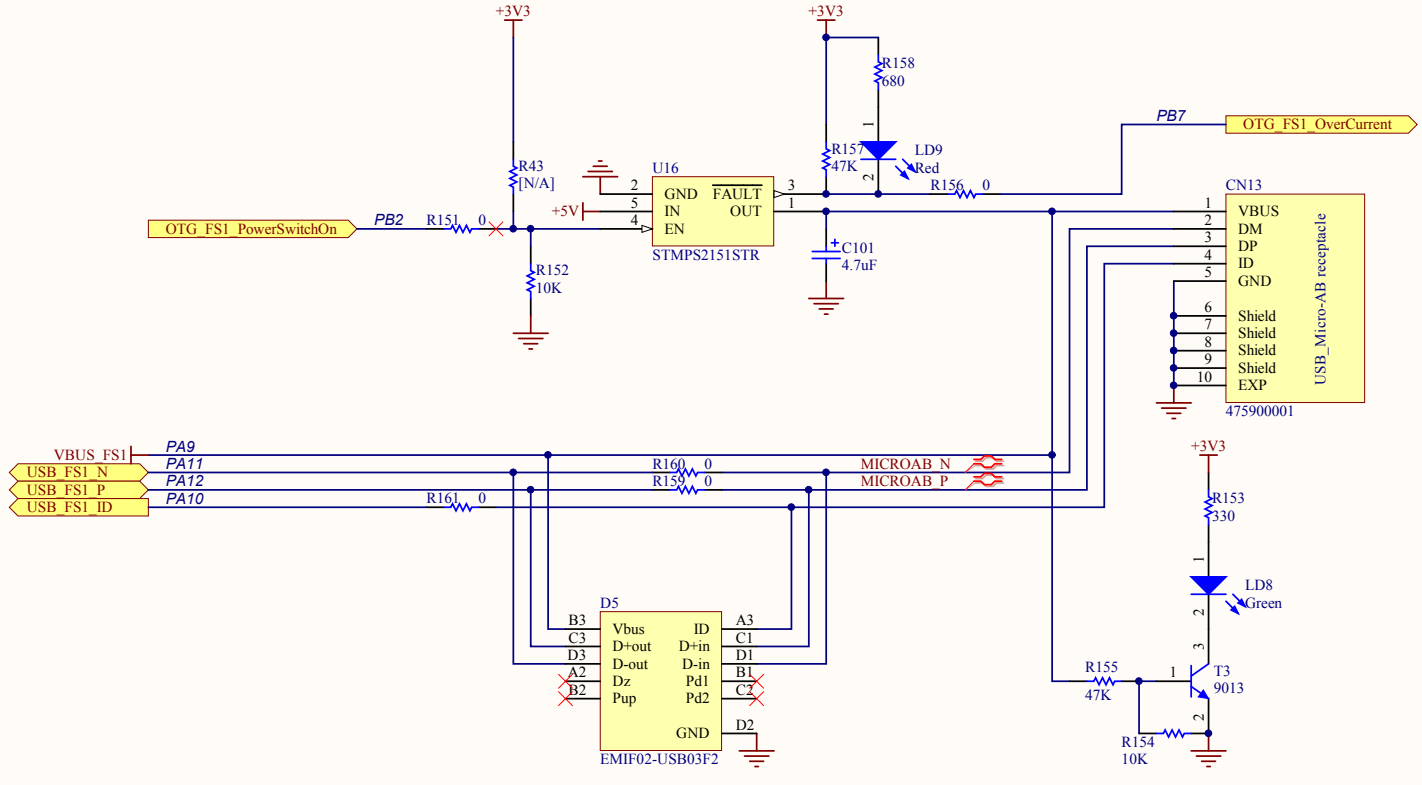

USB Full Speed operating range voltage: 3.0V<VDDUSB<3.6V

Title: **USB_OTG_FS**		
Project: **STM32F469I-DISCO**		
Size: A4	Reference: MB1189	Revision: B-07
Date: 7/22/2015		Sheet: 10 of 12

life.augmented

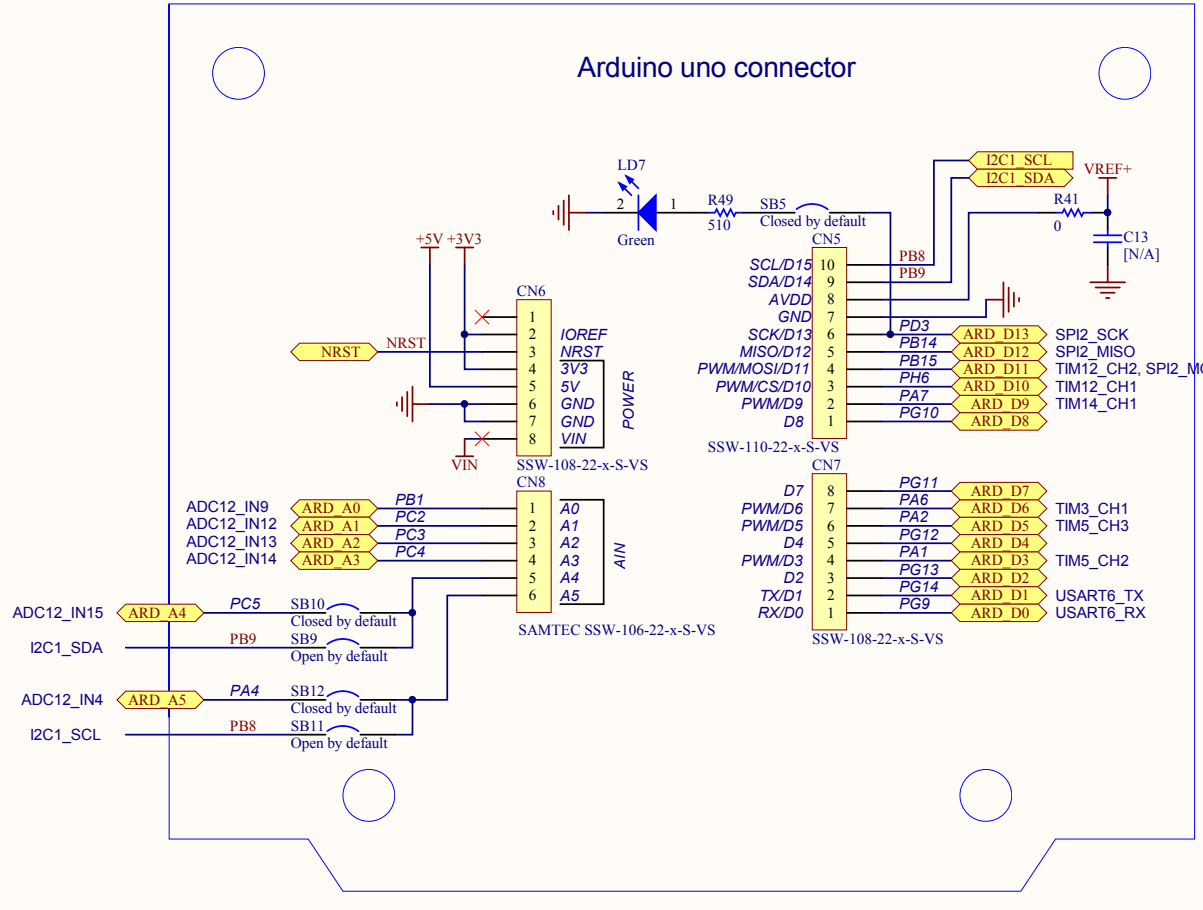

Title: **Arduino Uno connector**		
Project: **STM32F469I-DISCO**		
Size: A4	Reference: MB1189	Revision: B-07
Date: 7/22/2015		Sheet: 11 of 12

life.augmented

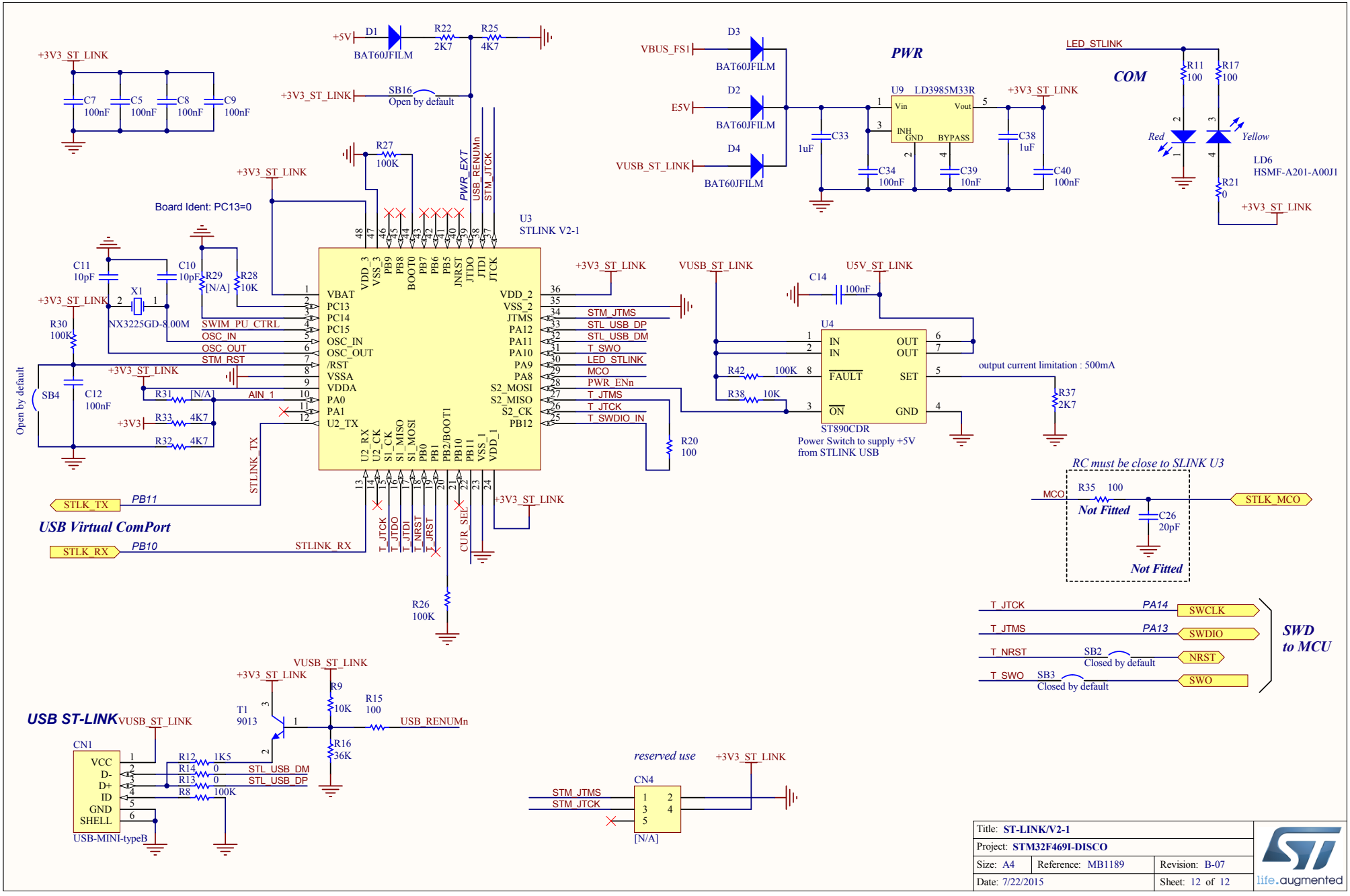
+3V3_ST_LINK
C7 100nF
C5 100nF
C8 100nF
C9 100nF
+5V
D1 BAT60JFILM
R22 2K7
R25 4K7
SB16 Open by default
R27 100K
PWR_EXT
USB_RENUMn
STM_JTCK
Board Ident: PC13=0
U3
STLINK V2-1
C11 10pF
C10 10pF
X1 NX3225GD-8.00M
R29 [N/A]
R28 10K
R30 100K
SB4 Open by default
C12 100nF
R31 [N/A]
R33 4K7
R32 4K7
SWIM_PU_CTRL
OSC_IN
OSC_OUT
STM_RST
AIN_1
STLINK_TX
STLK_TX
PB11
USB Virtual ComPort
STLK_RX
PB10
STLINK_RX
VBAT
PC13
PC14
PC15
OSC_IN
OSC_OUT
/RST
VSSA
VDDA
PA0
PA1
U2_TX
U2_RX
U2_CK
S1_CK
S1_MISO
S1_MOSI
PB0
PB1
PB2/BOOT1
PB10
PB11
VSS_1
VDD_1
VDD_3
VSS_3
PB9
PB8
BOOT0
PB7
PB6
PB5
JNRST
JTDO
JTDI
JTCK
VDD_2
VSS_2
JTMS
PA12
PA11
PA10
PA9
PA8
S2_MOSI
S2_MISO
S2_CK
PB12
STM_JTMS
STL_USB_DP
STL_USB_DM
T_SWO
LED_STLINK
MCO
PWR_ENn
T_JTMS
T_JTCK
T_SWDIO_IN
CUR_SEL
T_JTCK
T_JTDO
T_JTDI
T_NRST
T_JRST
R26 100K
R20 100
VUSB_ST_LINK
U5V_ST_LINK
C14 100nF
U4
IN
IN
FAULT
ON
OUT
OUT
SET
GND
R42 100K
R38 10K
ST890CDR
Power Switch to supply +5V
from STLINK USB
output current limitation : 500mA
R37 2K7
PWR
D3 BAT60JFILM
D2 BAT60JFILM
D4 BAT60JFILM
VBUS_FS1
E5V
VUSB_ST_LINK
C33 1uF
U9 LD3985M33R
Vin
Vout
INH
GND
BYPASS
C34 100nF
C39 10nF
C38 1uF
C40 100nF
COM
LED_STLINK
R11 100
R17 100
Red
Yellow
LD6 HSMF-A201-A00J1
R21 0
RC must be close to SLINK U3
MCO
R35 100
Not Fitted
C26 20pF
Not Fitted
STLK_MCO
T_JTCK
PA14
SWCLK
T_JTMS
PA13
SWDIO
T_NRST
SB2
Closed by default
NRST
T_SWO
SB3
Closed by default
SWO
SWD to MCU
USB ST-LINK
CN1
VCC
D-
D+
ID
GND
SHELL
USB-MINI-typeB
R12 1K5
R14 0
R13 0
R8 100K
STL_USB_DM
STL_USB_DP
T1 9013
R9 10K
R15 100
R16 36K
USB_RENUMn
reserved use
CN4
STM_JTMS
STM_JTCK
[N/A]
Title: ST-LINK/V2-1
Project: STM32F469I-DISCO
Size: A4
Reference: MB1189
Revision: B-07
Date: 7/22/2015
Sheet: 12 of 12
life.augmented