# ABBREVIATIONS

| | |
|---|---|
| ABV | ABOVE |
| ADJ | ADJUSTABLE |
| AF | AIRFOIL |
| AFF | ABOVE FINISHED FLOOR |
| AHU | AIR HANDLING UNIT |
| AP | ACCESS PANEL |
| BAS | BUILDING AUTOMATION SYSTEM |
| BI | BACKWARD INCLINE |
| BLDG | BUILDING |
| BHP | BRAKE HORSEPOWER |
| BTUH | BRITISH THERMAL UNIT PER HOUR |
| BDD | BACKDRAFT DAMPER |
| CD | CONDENSATE DRAIN |
| CFM | CUBIC FEET PER MINUTE |
| CLG | CEILING |
| CHW | CHILLED WATER |
| CHWR | CHILLED WATER RETURN |
| CHWS | CHILLED WATER SUPPLY |
| CWR | CONDENSER WATER RETURN |
| CWS | CONDENSER WATER SUPPLY |
| CONC | CONCRETE |
| CONT | CONTINUOUS |
| CO | CARBON MONOXIDE |
| $CO_2$ | CARBON DIOXIDE |
| CU | CONDENSING UNIT |
| DB | DRYBULB |
| DWGS | DRAWINGS |
| DX | DIRECT EXPANSION |
| EF | EXHAUST FAN |
| EXH | EXHAUST |
| EA | EACH |
| EAT | ENTERING AIR TEMPERATURE |
| EER | ENERGY EFFICIENCY RATIO |
| ELECT | ELECTRICAL |
| ENT | ENTERING |
| EQ | EQUAL |
| EWT | ENTERING WATER TEMPERATURE |
| FC | FORWARD CURVED |
| FCU | FAN COIL UNIT |
| FD | FIRE DAMPER |
| FL | FLOOR |
| FLEX | FLEXIBLE CONNECTOR OR DUCT |
| FPM | FEET PER MINUTE |
| F/S | COMBINATION FIRE AND SMOKE DAMPER |
| FT $H_2O$ | FEET WATER GAUGE |
| F | DEGREES FAHRENHEIT |
| GA | GAUGE |
| GAL | GALLON |
| GALV | GALVANIZED |
| GPM | GALLONS PER MINUTE |
| H | HUMIDISTAT |
| HP | HORSEPOWER |
| HTWR | HIGH TEMPERATURE HOT WATER RETURN |
| HTWS | HIGH TEMPERATURE HOT WATER SUPPLY |
| HW | HOT WATER |
| HWR | HOT WATER RETURN |
| HWS | HOT WATER SUPPLY |
| HVAC | HEATING VENTILATION AND AIR CONDITIONING |
| HV | HEATING AND VENTILATING |
| IN WG | INCHES WATER GAUGE |
| KW | KILOWATTS |
| LAT | LEAVING AIR TEMPERATURE |
| LWT | LEAVING WATER TEMPERATURE |
| MA | MAKE-UP AIR |
| MAX | MAXIMUM |
| MBH | 1,000 X BTUH |
| MIN | MINIMUM |
| MD | MANUAL VOLUME DAMPER |
| M | MOTORIZED DAMPER |
| MZ | MULTI-ZONE |
| NTS | NOT TO SCALE |
| OA | OUTSIDE AIR |
| OBMVD | OPPOSED BLADE MANUAL VOLUME DAMPER |
| PROP | PROPELLER |
| PCR | PRE-CONDITIONED AIR SYSTEM RETURN WATER |
| PD | PRESSURE DROP |
| PLBG | PLUMBING |
| PSIA | POUNDS PER SQUARE INCH ABSOLUTE |
| PSIG | POUNDS PER SQUARE INCH GAUGE |
| R | REFRIGERANT PIPING |
| RA | RETURN AIR |
| RD | RADIATION DAMPER |
| REG | REGISTER |
| REQ'D | REQUIRED |
| RH | RELATIVE HUMIDITY |
| RPM | REVOLUTIONS PER MINUTE |
| RTU | ROOFTOP UNIT |
| SA | SUPPLY AIR |
| SEER2 | SEASONAL ENERGY EFFICIENCY RATIO 2 |
| SF | SQUARE FOOT |
| SD | SMOKE DETECTOR |
| SDMP | SMOKE DAMPER |
| SR | SUPPLY REGISTER |
| STR | STARTER |
| SZ | SINGLE ZONE |
| T | THERMOSTAT |
| TEFC | TOTALLY ENCLOSED FAN COOLED |
| TEMP | TEMPERATURE |
| T/O | TRANSFER OPENING ABOVE CEILING |
| TS | TEMPERATURE SENSOR |
| TYP | TYPICAL |
| VFD | VARIABLE FREQUENCY DRIVE |
| VAV | VARIABLE AIR VOLUME |
| VS | VARIABLE SPEED |
| W | WATTS |
| W/ | WITH |
| W/O | WITHOUT |
| WB | WETBULB |
| ZD | ZONE DAMPER |

SHEET DRAWING INDEX

| SHEET # | TITLE |
|---|---|
| MECHANICAL | |
| M0.1 | SYMBOLS & LEGENDS MECHANICAL |
| M2.1 | FIRST FLOOR PLAN MECHANICAL |
| M2.2 | SECOND FLOOR PLAN MECHANICAL |
| M2.3 | ROOF PLAN MECHANICAL |
| M3.1 | SCHEDULES MECHANICAL |
| M3.2 | SCHEDULES MECHANICAL |
| M4.1 | DETAILS MECHANICAL |
| M4.2 | DETAILS MECHANICAL |
| M4.3 | DETAILS MECHANICAL |
| M5.1 | ENERGY COMPLIANCE MECHANICAL |
| M6.1 | SPECIFICATIONS MECHANICAL |

## ENERGY CALC VALUES

| | |
|---|---|
| ROOF: | R-30 |
| WALLS: | R-7.6 |
| WINDOWS: | |
| SHGC: | 0.25 |
| U-VALUE: | 0.5 |
| VLT: | 0.5 |
| DOORS: | R-2.5 |
| FLOORS: | R-11 |

# GENERAL NOTES

1. INSTALL EQUIPMENT AND MATERIALS IN COMPLIANCE WITH MANUFACTURER'S MINIMUM CLEARANCE REQUIREMENTS AND RECOMMENDATIONS.
2. COMPLY WITH THE LATEST EDITION OF NFPA AND THE 8TH EDITION OF THE 2023 FLORIDA BUILDING CODE (MECHANICAL, PLUMBING, GAS AND ENERGY CONSERVATION).
3. ALL MATERIALS SHALL FIT THE SPACE AVAILABLE. VERIFY DIMENSIONS AND CLEARANCES ON BUILDING PLANS PRIOR TO COMMENCING WORK.
4. AN INDEPENDENT TEST AND BALANCE CONTRACTOR (TABC) SHALL BE HIRED BY THE GENERAL CONTRACTOR.
5. TABC IS RESPONSIBLE FOR TESTING AND BALANCING OF AIR SYSTEMS IN ACCORDANCE WITH AABC GUIDELINES. A TEST AND BALANCE REPORT SHALL BE SUBMITTED TO THE ARCHITECT FOR APPROVAL.
6. PROVIDE 45 DEGREE BRANCH TAKE-OFF PER SMACNA FIG. 2-8 ON ALL RECTANGULAR DUCT TAKE-OFFS.
7. ALL DUCTWORK TAKE-OFFS AND/OR BRANCH DUCTWORK SHALL BE PROVIDED WITH BALANCING DAMPERS (REMOTE IF IN HARD CEILING AREAS).
8. CONTRACT SHALL MAINTAIN ALL RATED FIRE, SMOKE AND MEMBRANE ASSEMBLIES (EVEN IF NOT NOTED ON PLANS). PROVIDE AND INSTALL FIRE/SMOKE/RADIATION DAMPERS AT ALL RATED PENETRATIONS AND PROVIDE DUCT MOUNTED HINGED ACCESS DOORS. THIS APPLIES FOR ALL FIRE/SMOKE/RADIATION DAMPERS.
9. CONTRACTOR SHALL COORDINATE VOLTAGE AND PHASE OF EACH PIECE OF EQUIPMENT WITH THE ELECTRICAL CONTRACTOR PRIOR TO ORDERING AND SHALL COORDINATE WITH ALL OTHER TRADES PRIOR TO OR INSTALLING EQUIPMENT AND MATERIALS.
10. COORDINATE ALL HVAC SYSTEM DRAWINGS WITH EXISTING/NEW TRUSS TO AVOID INTERFERENCE BETWEEN MECHANICAL SYSTEMS AND ROOF STRUCTURE. CONTRACTOR SHALL BE RESPONSIBLE FOR ALL COSTS ASSOCIATED WITH TRUSS INTERFERENCE THAT OCCURS IN THE FIELD DURING CONSTRUCTION. COORDINATE IN ADVANCE. DUCT SIZES MAY BE REVISED TO FIT TRUSS SYSTEM SO LONG AS THE EQUIVALENT INSIDE CROSS SECTIONAL AREA IS NOT DECREASED.
11. GAUGES AND CONSTRUCTION FOR DUCTWORK SHALL CONFORM TO THE LATEST EDITION OF SMACNA'S HVAC DUCT CONSTRUCTION STANDARDS.
12. TRANSITION RECTANGULAR DUCTWORK ON BOTTOM AND SIDES. MAINTAIN TOP OF DUCTWORK LEVEL AND HIGH AS POSSIBLE. FLEXIBLE DUCT RUN-OUTS TO CEILING DIFFUSERS SHALL BE AS STRAIGHT AS POSSIBLE AND FREE OF SAGS AND KINKS. FLEX DUCT SHALL BE THE SAME SIZE AS THE DIFFUSER NECK IT SERVES.
13. ALL DUCT TRANSITIONS FROM SQUARE TO ROUND SHALL BE SMOOTH SQUARE TO ROUND TRANSITIONS. SPIN-IN FITTINGS AT THE END OF CAPPED DUCTS ARE NOT ACCEPTABLE. DUCT DIMENSIONS SHOWN ARE INSIDE CLEAR DIMENSIONS.
14. THE CONTRACTOR SHALL FULFILL ALL REQUIREMENTS OF THE CONTRACT DOCUMENTS AND SHALL COMPLETE THE WORK SHOWN ON THESE DRAWINGS. ALL SYSTEMS SHALL BE FINISHED, TESTED AND BALANCED, ADJUSTED, AND PROVEN TO BE FULLY OPERATIONAL AND USEABLE.
15. ADJUST ALL DIFFUSERS IN CORRIDORS OR WITHIN THREE (3) FEET OF A WALL TO PROVIDE 2-WAY OR 3-WAY BLOW AWAY FROM OR PARALLEL TO WALLS. ALL DIFFUSERS SHALL HAVE 4-WAY BLOW UNLESS NOTED OTHERWISE.
16. PORTIONS OF DUCTWORK VISIBLE THROUGH GRILLES AND REGISTERS IN FINISHED AREAS SHALL BE PAINTED FLAT BLACK.
17. ALL DAMPERS IN AND ABOVE CEILING SHALL BE ACCESSIBLE. CONTRACTOR SHALL COORDINATE ALL ACCESS PANELS IN CEILINGS OR WALLS WITH ARCHITECTURAL REFLECTED CEILING PLANS AND INTERIOR DRAWINGS FOR PROPER LOCATION. REMOTE DAMPERS CAN BE INSTALLED ON AIR DEVICES LOCATED WITHIN HARD CEILINGS.
18. MOUNT THERMOSTATS WHERE INDICATED ON PLANS 4'-0" ABOVE FINISHED FLOOR UNLESS NOTED OTHERWISE. IN HANDICAPPED ACCESSIBLE AREAS, MOUNT CONTROLS AT 4'-0" (MAXIMUM) ABOVE FINISHED FLOOR.
19. COORDINATE DUCTWORK AND PIPING WITH PLUMBING, FIRE PROTECTION AND ELECTRICAL. MAKE OFFSETS AND TRANSITIONS TO COORDINATE WITH OTHER TRADES WITHOUT ANY ADDITIONAL EXPENSE TO THE CONTRACT.
20. SEAL ALL TRANSVERSE JOINTS AND FITTINGS WITH DUCT SEALER.
21. TRAP AND ROUTE CONDENSATE DRAINS LINES, FULL SIZE OF UNIT CONNECTION, AS INDICATED. SLOPE 1/8" PER FOOT.
22. ALTERNATE MANUFACTURERS AND MODELS WILL BE REVIEWED. THERE MAY BE ARCHITECTURAL, STRUCTURAL AND ELECTRICAL CHANGES RESULTING FROM THE ALTERNATES. THE COST OF IMPLEMENTING AND ENGINEERING THESE CHANGES SHALL BE BORNE BY THE MECHANICAL SUBCONTRACTOR.
23. PIPE AND DUCT ROUTING SHOWN IS SCHEMATIC. PROVIDE ANY ADDITIONAL OFFSETS AND FITTINGS, INCLUDING DIVIDED DUCTS, REQUIRED FOR PROPER INSTALLATION AND TO MAINTAIN CLEARANCES AS ENCOUNTERED IN THE FIELD.
24. COORDINATE CEILING MOUNTED AIR DEVICE LOCATION WITH REFLECTED CEILING PLAN AND OTHER TRADES.
25. ALL CONTROL WIRING AND CONDUIT SHALL COMPLY WITH NEC DIVISION 16 SPECIFICATIONS.
26. PROVIDE MATERIALS WHICH HAVE A FLAME SPREAD RATING OF 25 OR LESS AND A SMOKE DEVELOPED RATING OF 50 OR LESS WHEN TESTED IN ACCORD WITH ASTM E84.
27. SLEEVE AND FIRE STOP PENETRATIONS THROUGH FIRE RATED SYSTEMS TO MAINTAIN RATING OF SYSTEM. USE MINIMUM GALVANIZED STEEL GAUGE DUCT AS REQUIRED TO MAINTAIN RATING OF SYSTEM.
28. WHERE DRYER EXHAUST DUCT IS CONCEALED WITHIN THE BUILDING CONSTRUCTION, IF THE EQUIVALENT LENGTH OF THE DUCT IS MORE THAN 35'-0" IT SHALL BE IDENTIFIED ON A PERMANENT LABEL OR TAG. THE LABEL OR TAG SHALL BE LOCATED WITHIN 6 FEET OF THE EXHAUST DUCT CONNECTION.
29. CONTRACTOR TO ORDER ALL FIRE/SMOKE DAMPERS WITH INTEGRAL SMOKE DETECTORS AND END STOP INDICATOR OPTIONS. VERIFY VOLTAGE WITH ELECTRICAL DRAWINGS. IF BUILDING IS EQUIPPED WITH FIRE ALARM SYSTEM ALL FIRE/SMOKE DAMPERS WILL BE CONNECTED TO BUILDING FIRE ALARM SYSTEM.
30. ALL MECHANICAL EQUIPMENT SHALL BE THOROUGHLY CLEANED OF ALL DIRT, OIL, CONCRETE, ETC. ANY DENTS, SCRATCHES OR OTHER VISIBLE BLEMISHES SHALL BE CORRECTED AND THE APPEARANCE OF THE EQUIPMENT MADE "LIKE NEW" AND TO THE SATISFACTION OF THE ARCHITECT/ENGINEER. UPON COMPLETION, AND BEFORE FINAL ACCEPTANCE OF THE WORK, ALL DEBRIS, RUBBISH, LEFTOVER MATERIALS, TOOLS AND EQUIPMENT SHALL BE REMOVED FROM THE SITE. PROTECTION OF WORK UNTIL FINAL ACCEPTANCE: PROTECT ALL MATERIALS AND EQUIPMENT FROM DAMAGE, ENTRANCE OF DIRT AND CONSTRUCTION DEBRIS FROM THE TIME OF INSTALLATION UNTIL FINAL ACCEPTANCE. ANY MATERIALS AND EQUIPMENT WHICH ARE DAMAGED SHALL BE REPAIRED TO "AS NEW" CONDITION OR REPLACED AT THE DIRECTION OF THE ARCHITECT/ENGINEER. WHERE FACTORY FINISHES OCCUR AND DAMAGE IS MINOR, FINISHES MAY BE TOUCHED UP. IF, IN THE OPINION OF THE ARCHITECT/ENGINEER THE DAMAGE IS EXCESSIVE, FACTORY FINISH SHALL BE REPLACED TO "NEW" CONDITION.
31. DRAWINGS ARE DIAGRAMMATIC AND INDICATE THE GENERAL ARRANGEMENT AND EXTENT OF WORK. EXACT LOCATIONS AND ARRANGEMENT OF MATERIALS AND EQUIPMENT SHALL BE DETERMINED, WITH THE ACCEPTANCE OF THE ARCHITECT/ENGINEER, AS WORK PROGRESSES TO CONFORM IN THE BEST POSSIBLE MANNER WITH THE SURROUNDINGS AND WITH THE ADJOINING WORK OF OTHER TRADES. WHERE LOCATIONS OF EQUIPMENT, DEVICES OR FIXTURES ARE CONTROLLED BY ARCHITECTURAL FEATURES, ESTABLISH SUCH LOCATIONS BY REFERRING TO DIMENSIONS ON ARCHITECTURAL DRAWINGS AND NOT BY SCALING DRAWINGS.
32. IN CASE OF DIFFERENCES BETWEEN DRAWINGS AND SPECIFICATIONS, OR WHERE DRAWINGS AND SPECIFICATIONS ARE NOT CLEAR OR DEFINITE, THE SUBJECT SHALL BE REFERRED TO ARCHITECT/ENGINEER FOR CLARIFICATION AND INSTRUCTIONS.
33. ANY INTERRUPTION OF EXISTING MECHANICAL AND ELECTRICAL SERVICES SHALL BE COORDINATED IN ADVANCE WITH THE OWNER'S REPRESENTATIVE. THIS INCLUDES, BUT IS NOT LIMITED TO, SERVICES PROVIDING CHILLED WATER, ELECTRICITY, OR OTHER CRITICAL SYSTEMS AS MAY BE PERTINENT TO THIS PARTICULAR PROJECT. SERVICE INTERRUPTION TIMES AND DURATION OF INTERRUPTION OF SERVICES SHALL BE DECIDED BY THE OWNER. PROVIDE APPROPRIATE PROVISIONS (SUCH AS ISOLATION SHUT-OFF VALVES, DAMPERS, END CAPS, AND SIMILAR ITEMS) AS NECESSARY TO ACCOMMODATE THE REQUIRED SERVICE INTERRUPTIONS. IF SHUTDOWNS CANNOT BE ACCOMMODATED, PROVIDE MEANS FOR "WET" TAPPING OR "HOT" TAPPING OF PIPING SYSTEMS.
34. ALL MAIN DUCTWORK SHOWN PER PLAN IS TO BE SHEET METAL. FIBERGLASS DUCT BOARD IS NOT TO BE INSTALLED UNLESS SPECIFICALLY AUTHORIZED BY THE BUILDING LANDLORD, PROJECT OWNER/AGENT AND MECHANICAL ENGINEER OF RECORD.
35. FIRE AND FIRE/SMOKE DAMPERS ARE REQUIRED TO BE UL LISTED AND APPROVED FOR THE ASSEMBLIES LISTED ON THE ARCHITECTURAL DRAWINGS. THESE DAMPERS MUST ALSO BE REVIEWED AND APPROVED BY THE ARCHITECT PRIOR TO ORDERING.
36. TOTAL DEVELOPED LINESET LENGTH, INCLUDING HORIZONTAL AND VERTICAL DISTANCE, TO BE VERIFIED WITH CONDENSING UNIT MANUFACTURER PRIOR TO PURCHASE. IF CONDENSING UNIT LOCATIONS EXCEED THE MANUFACTURER'S RECOMMENDED TOTAL LINESET LENGTH VERIFY THE MANUFACTURER HAS AN OPTION TO ALLOW FOR LONG LINESETS AND PROVIDE ACCESSORIES AS REQUIRED.
37. WHERE REFRIGERANT LINES ARE INSTALLED IN STUDS, JOISTS, RAFTERS OR SIMILAR MEMBER SPACES AND LOCATED LESS THAN 1½" FROM THE NEAREST EDGE OF THE MEMBER THEY MUST BE CONTINUOUSLY PROTECTED BY SHIELD PLATES PER FMC 1101.3.

# SYMBOL LEGEND

SUPPLY DIFFUSER
RETURN OR OUTDOOR AIR GRILLE
EXHAUST GRILLE
LINEAR SLOT DIFFUSER
SIDEWALL TRANSFER GRILLE
SIDEWALL SUPPLY REGISTER
SIDEWALL RETURN GRILLE OR OUTSIDE AIR LOUVER
SIDEWALL EXHAUST GRILLE
RD — RADIATION DAMPER INSTALLED IN AIR DEVICE
RD — RADIATION DAMPER INSTALLED IN DUCT
SUPPLY DUCT UP SECTION (RECTANGULAR)
RETURN DUCT UP SECTION (RECTANGULAR)
EXHAUST DUCT UP SECTION (RECTANGULAR)
SUPPLY DUCT DOWN SECTION (RECTANGULAR)
RETURN DUCT DOWN SECTION (RECTANGULAR)
EXHAUST DUCT DOWN SECTION (RECTANGULAR)
SUPPLY DUCT UP SECTION (ROUND)
SUPPLY DUCT DOWN SECTION (ROUND)
EXISTING DUCTWORK TO REMAIN (LIGHT LINETYPE)
A/B — RECTANGULAR DUCTWORK WITH TAKE-OFF, BALANCING DAMPER AND INSULATED FLEXIBLE ROUND DUCT. SAME SIZE AS DIFFUSER INLET UNLESS NOTED OTHERWISE. FIRST DIMENSION IS THAT OF SIDE SHOWN
A ø — ROUND DUCTWORK
CONICAL FITTING WITH DAMPER ON BRANCH CONNECTION TO RECTANGULAR MAIN (PROVIDE DAMPER IN LOW PRESSURE DUCTWORK ONLY)
L=1/4W, MIN. 4" — 45° — W — RECTANGULAR BRANCH DUCT CONNECTION. (PROVIDE BALANCING DAMPER AT ALL BRANCH CONNECTIONS)
ELBOW WITH TURNING VANES
OPPOSED BLADE VOLUME DAMPER (OBD)
MANUAL DAMPER
FLEXIBLE DUCT CONNECTION
FIRE/RADIATION DAMPER WITH ACCESS PANEL
COMBINATION FIRE/SMOKE DAMPER WITH ACCESS PANEL (PROVIDED BY MECHANICAL, CONNECTED BY ELECTRICAL PROVIDE 120V CIRCUIT AND FIRE ALARM CONNECTION IF APPLICABLE)
EXISTING DUCTWORK TO BE REMOVED (DASHED LINETYPE)
SD — DUCT MOUNTED SMOKE DETECTOR PROVIDED AND WIRED BY ELECTRICAL CONTRACTOR AND INSTALLED IN DUCT BY MECHANICAL CONTRACTOR. REFER TO SPECIFICATIONS FOR CONTROL REQUIREMENTS.
FLEX DUCT
OPENING IN WALL ABOVE CEILING
TS — WALL MOUNTED TEMPERATURE SENSOR MOUNT 4'-0" ABOVE FINISHED FLOOR
T — WALL MOUNTED THERMOSTAT MOUNT 4'-0" ABOVE FINISHED FLOOR
CO — WALL MOUNTED CO SENSOR MOUNT 4'-0" ABOVE FINISHED FLOOR
H — WALL MOUNTED HUMIDITY SENSOR MOUNT 4'-0" ABOVE FINISHED FLOOR
$CO_2$ — WALL MOUNTED $CO_2$ SENSOR MOUNT 4'-0" ABOVE FINISHED FLOOR

X — REFERENCE NOTES
AHU 3 — EQUIPMENT TYPE / MARK — EQUIPMENT TAG
A / B — PHOTO DETAIL OR SECTION IDENTIFICATION TARGET
A = DETAIL NUMBER
B = SHEET NUMBER ON WHICH DETAIL IS LOCATED
A-100 — AIR DEVICE TAG
MARK-CFM
UC — 1" DOOR UNDER CUT. ARROW INDICATES DIRECTION OF FLOW
FLOW DIRECTION
INDICATES POINT OF CONNECTION BETWEEN NEW AND EXISTING
POINT OF DISCONNECT
CWS — CONDENSER WATER SUPPLY PIPING
CWR — CONDENSER WATER RETURN PIPING
BCWS — BUILDING CONDENSER WATER SUPPLY PIPING
BCWR — BUILDING CONDENSER WATER RETURN PIPING
CHWS — CHILLED WATER SUPPLY PIPING
CHWR — CHILLED WATER RETURN PIPING
HWS — HOT WATER SUPPLY PIPING
HWR — HOT WATER RETURN PIPING
CD — CONDENSATE DRAIN PIPING
R — REFRIGERANT PIPING
FS — FLOW SENSOR
SP — STATIC PRESSURE TRANSMITTER ASSEMBLY
TEE (PLAN, UP, DOWN)
ELBOW (PLAN, UP, DOWN)
VALVE
TWO WAY MOTORIZED CONTROL VALVE
THREE WAY MOTORIZED CONTROL VALVE
PRESSURE REDUCING VALVE
FLOW CONTROL VALVE
SHUT-OFF VALVE
BUTTERFLY VALVE
CHECK VALVE
STRAINER
BALANCE VALVE WITH INTEGRAL TAPS FOR CONNECTION OF DIFFERENTIAL PRESSURE METER. VALVE SHALL HAVE NAMEPLATE INDICATING WATER FLOW RATE VERSUS VALVE PRESSURE DROP
A — AUTOMATIC FLOW CONTROL VALVE WITH INTEGRAL TEMPERATURE AND PRESSURE TEST PORTS
UNION
VENTURI FLOW METER
PRESSURE AND/OR TEMPERATURE PORT
THERMOMETER
PRESSURE GAUGE WITH GAUGE COCK
FLEXIBLE CONNECTION
PRESSURE RELIEF VALVE

## NOTE

ABBREVIATIONS, GENERAL NOTES AND SYMBOLS ON THIS MECHANICAL SHEET ARE FOR GENERAL REFERENCE PURPOSES ONLY. ALL OF THESE ABBREVIATIONS, GENERAL NOTES AND SYMBOLS MAY NOT BE USED FOR THIS PROJECT.

THE CARDIOVASCULAR CENTER OF FLORIDA

A NEW MEDICAL OFFICE BUILDING

CLERMONT, FL

M0.1

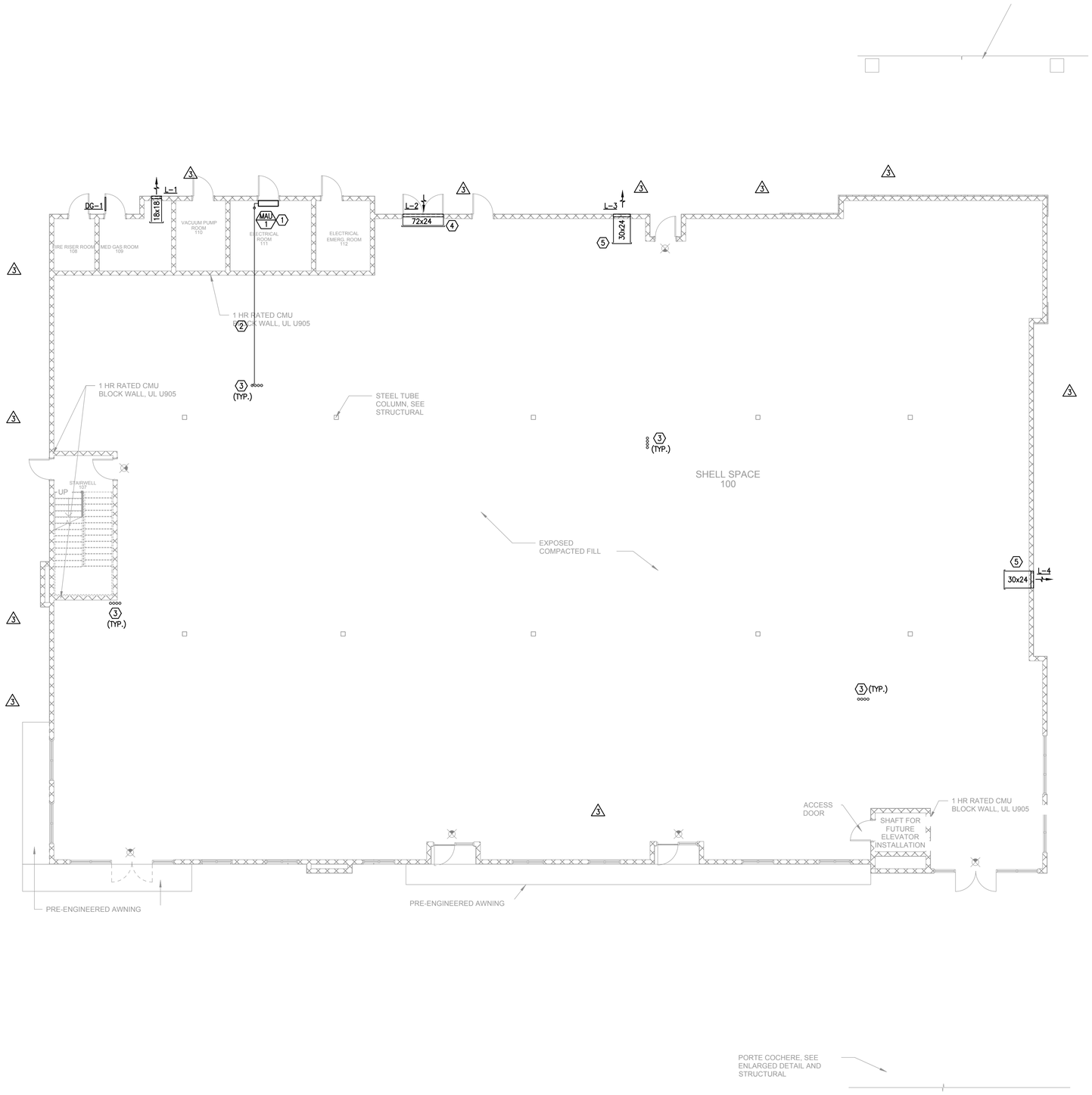


1 M2.1 FIRST FLOOR PLAN - MECHANICAL
1/8" = 1'-0"

## GENERAL NOTES:

1. NEW HVAC EQUIPMENT IS BEING INSTALLED ON (AND/OR SUSPENDED FROM) THE ROOF DECK OF THIS PROJECT. THE CONTRACTOR IS CAUTIONED THAT IT IS NOT WITHIN THE DESIGN TEAM'S SCOPE OF WORK TO EVALUATE THE CAPACITY OR INTEGRITY OF THE BUILDING'S STRUCTURAL SYSTEMS OR TO DETERMINE IF THE STRUCTURE IS ABLE TO ADEQUATELY SUPPORT NEW LOADS THAT THIS DESIGN WILL IMPOSE ON IT, AND THEREFORE SUCH EVALUATIONS / DETERMINATIONS HAVE NOT BEEN MADE. SHOULD THE CONTRACTOR (AT ANY TIME) HAVE SUFFICIENT CAUSE FOR CONCERN, THEN THESE CONCERNS SHOULD BE BROUGHT TO THE ATTENTION OF THE OWNER AND/OR LANDLORD FOR FURTHER INVESTIGATION. IF NECESSARY, A STRUCTURAL ENGINEER CAN BE RETAINED TO DETERMINE IF ANY MITIGATION WORK WILL BE REQUIRED.
2. MECHANICAL CONTRACTOR TO REVIEW SPECIFIED HVAC UNITS IN DETAIL, INCLUDING SPECIFICATION FEATURES AND ANTICIPATED AVAILABILITY AND LEAD TIMES. MECHANICAL CONTRACTOR MAY SUBMIT PROPOSED SUBSTITUTIONS TO THE SPECIFIED EQUIPMENT IF SUCH SUBSTITUTION FAVORS THE OWNER'S INTERESTS. PROPOSED SUBSTITUTIONS MAY ALSO ACCOUNT FOR THE MECHANICAL CONTRACTOR'S KNOWLEDGE, EXPERTISE, AND RELEVANT EXPERIENCE WORKING IN A SPECIFIC CLIMATIC AREA OR WITH A SPECIFIC JURISDICTION HAVING AUTHORITY.

## REFERENCE NOTES:

1. MOUNT MINI-SPLIT ABOVE DOOR AS HIGH AS POSSIBLE. ROUTE REFRIGERANT LINES IN WALL UP TO CONDENSING UNIT ON ROOF. REFER TO PLUMBING PLANS FOR CONDENSATE DISPOSAL. PROVIDE CONDENSATE PUMP EQUAL TO BLUE DIAMOND X87-721 IF REQUIRED. CONDENSATE PUMP MUST BE ACCESSIBLE.
2. ROUTE FULLY INSULATED REFRIGERANT LINES FROM MINI-SPLIT WITHIN REFRIGERANT LINE CHASE TO CONDENSING UNITS ON ROOF. REFER TO PLUMBING PLANS FOR CONDENSATE ROUTING.
3. PROVIDE A MINIMUM OF FOUR 4" PVC REFRIGERANT SLEEVES IN CHASE PER FUTURE AIR HANDLING UNIT/CONDENSING UNIT. CAP IN CEILING SPACE AND ROUTE UP TO FLOOR ABOVE. CONTRACTOR TO VERIFY EXACT SIZE AND LOCATION PRIOR TO INSTALLATION.
4. PROVIDE OUTSIDE AIR DUCT AT EXTERNAL WALL WITH CAPPED DUCTWORK AS SHOWN. FOR FUTURE USE DURING TENANT BUILD-OUT.
5. PROVIDE EXHAUST AIR DUCT AT EXTERNAL WALL WITH CAPPED DUCTWORK AS SHOWN. FOR FUTURE USE DURING TENANT BUILD-OUT.

OWNER / PROJECT:

THE CARDIOVASCULAR CENTER OF FLORIDA

A NEW MEDICAL OFFICE BUILDING

CLERMONT, FL

M2.1

Scale As indicated

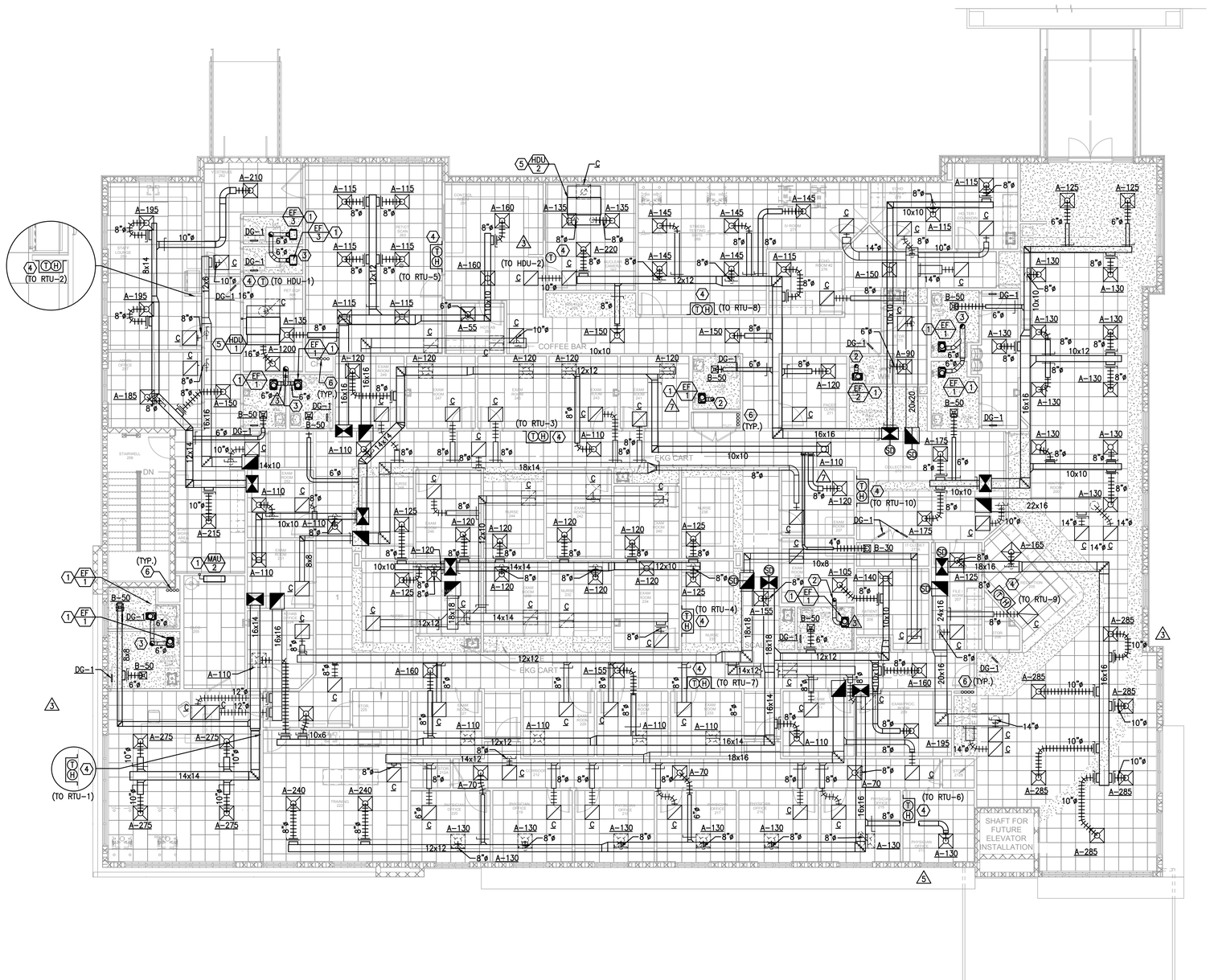


1 M2.2 SECOND FLOOR PLAN - MECHANICAL
1/8" = 1'-0"

## GENERAL NOTES:

1. NEW HVAC EQUIPMENT IS BEING INSTALLED ON (AND/OR SUSPENDED FROM) THE ROOF DECK OF THIS PROJECT. THE CONTRACTOR IS CAUTIONED THAT IT IS NOT WITHIN THE DESIGN TEAM'S SCOPE OF WORK TO EVALUATE THE CAPACITY OR INTEGRITY OF THE BUILDING'S STRUCTURAL SYSTEMS OR TO DETERMINE IF THE STRUCTURE IS ABLE TO ADEQUATELY SUPPORT NEW LOADS THAT THIS DESIGN WILL IMPOSE ON IT, AND THEREFORE SUCH EVALUATIONS / DETERMINATIONS HAVE NOT BEEN MADE. SHOULD THE CONTRACTOR (AT ANY TIME) HAVE SUFFICIENT CAUSE FOR CONCERN, THEN THESE CONCERNS SHOULD BE BROUGHT TO THE ATTENTION OF THE OWNER AND/OR LANDLORD FOR FURTHER INVESTIGATION. IF NECESSARY, A STRUCTURAL ENGINEER CAN BE RETAINED TO DETERMINE IF ANY MITIGATION WORK WILL BE REQUIRED.

2. MECHANICAL CONTRACTOR TO REVIEW SPECIFIED HVAC UNITS IN DETAIL, INCLUDING SPECIFICATION FEATURES AND ANTICIPATED AVAILABILITY AND LEAD TIMES. MECHANICAL CONTRACTOR MAY SUBMIT PROPOSED SUBSTITUTIONS TO THE SPECIFIED EQUIPMENT IF SUCH SUBSTITUTION FAVORS THE OWNER'S INTERESTS. PROPOSED SUBSTITUTIONS MAY ALSO ACCOUNT FOR THE MECHANICAL CONTRACTOR'S KNOWLEDGE, EXPERTISE, AND RELEVANT EXPERIENCE WORKING IN A SPECIFIC CLIMATIC AREA OR WITH A SPECIFIC JURISDICTION HAVING AUTHORITY.

## REFERENCE NOTES:

1. INSTALL NEW CEILING MOUNTED EXHAUST FAN IN LOCATION SHOWN PER DETAIL SHEET M4.2.
2. ROUTE 6"ø GALVANIZED METAL EXHAUST DUCT UP THROUGH BUILDING ROOF AND TERMINATE WITH ROOF CAP PER DETAIL SHEET M4.2.
3. ROUTE 8"ø GALVANIZED METAL EXHAUST DUCT UP THROUGH BUILDING ROOF AND TERMINATE WITH ROOF CAP PER DETAIL SHEET M4.2.
4. INSTALL NEW HONEYWELL TH8321WF1001 DIGITAL THERMOSTAT WITH HUMIDISTAT. MOUNT 4'-0" ABOVE FINISHED FLOOR. PROVIDE WITH CLEAR ACRYLIC LOCKING COVER WHEN LOCATED IN A PUBLIC AREA.
5. MOUNT HDU PER DETAIL AND ROUTE REFRIGERANT LINES WITHIN MECHANICAL CLOSET WALL UP TO CONDENSING UNIT ON ROOF. SEE PLUMBING PLANS FOR CONDENSATE DISPOSAL. ROUTE REFRIGERANT LINES PER DETAIL.
6. PROVIDE A MINIMUM OF FOUR 4" PVC REFRIGERANT SLEEVES IN CHASE PER FUTURE AIR HANDLING UNIT/CONDENSING UNITS. CONTRACTOR TO VERIFY EXACT SIZE AND LOCATION PRIOR TO INSTALLATION.

OWNER / PROJECT:

THE CARDIOVASCULAR CENTER OF FLORIDA

A NEW MEDICAL OFFICE BUILDING

CLERMONT, FL

M2.2

Scale As indicated

## GENERAL NOTES:

A. REFER TO ARCHITECTURAL DRAWINGS FOR MECHANICAL EQUIPMENT SCREENING.

B. MAINTAIN A MINIMUM OF 10'–0" BETWEEN ANY EXHAUST AND OUTSIDE AIR INTAKE.

## REFERENCE NOTES: (X)

(1) INSTALL NEW ROOF TOP UNIT ON NEW ROOF CURB PER DETAIL SHEET M4.11.

(2) INSTALL CONDENSING UNITS ON ROOF RACK PER DETAILS SHEET.

(3) PROPERLY SUPPORT CONDENSATE OFF ROOF AT A MINIMUM OF 4'–0" ON CENTER PER DETAIL SHEET M4.1 AND ROUTE TO NEAREST PRIMARY STORM DRAIN.

(4) REFRIGERANT LINES UP FROM FLOOR BELOW. PROVIDE DOGHOUSE PER DETAIL SHEET M4.3.

(5) PROVIDE REFRIGERANT LINE SUPPORTS PER DETAIL SHEET M4.1.

(6) GALVANIZED METAL EXHAUST DUCT UP FROM FLOOR BELOW. TERMINATE WITH GREENHECK GRS ROOF CAP PER DETAIL SHEET M4.2. ROOF CAP TO BE 10'–0" FROM ANY FRESH AIR INTAKE.

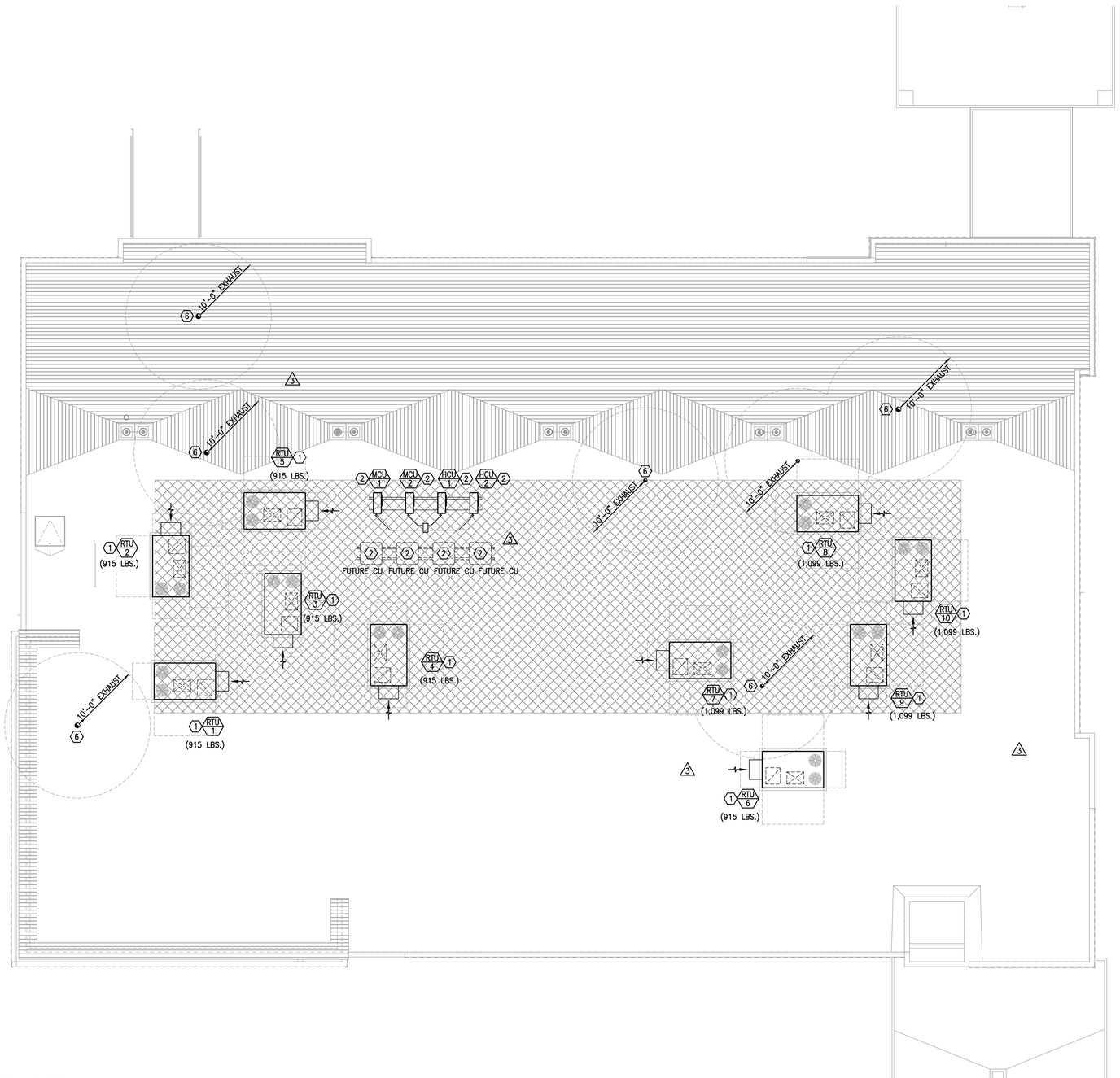


1 M2.3 ROOF PLAN - MECHANICAL
1/8" = 1'-0"

OWNER / PROJECT:

# THE CARDIOVASCULAR CENTER OF FLORIDA

A NEW MEDICAL OFFICE BUILDING
CLERMONT, FL

M2.3

Scale As indicated

# GENERAL NOTES:

1. CONTRACTOR TO VERIFY ALL MECHANICAL EQUIPMENT SELECTED FITS WITHIN DESIGNATED SPACE SHOWN ON MECHANICAL PLANS AND PROVIDES THE CORRECT CLEARANCES REQUIRED BY THE MANUFACTURER.
2. CONTRACTOR SHALL COORDINATE VOLTAGE, PHASE AND REQUIRED MOCP FOR EACH PIECE OF EQUIPMENT WITH THE ELECTRICAL CONTRACTOR PRIOR TO ORDERING.
3. IF PRODUCTS/EQUIPMENT ARE VALUE ENGINEERED OR SUBSTITUTED IT IS THE CONTRACTORS RESPONSIBILITY TO FIELD COORDINATE ALL NEW PRODUCTS/EQUIPMENT REQUIREMENTS WITH OTHER DISCIPLINES/TRADES.

# A2L REFRIGERANT REQUIREMENTS ACKNOWLEDGMENT

THE ENVIRONMENTAL PROTECTION AGENCY (EPA) AND DEPARTMENT OF ENERGY (DOE) ARE RELEASING NEW REFRIGERANT FOR HVAC EQUIPMENT. THE REFRIGERANT IS A2L AND WILL BE THE NEW REQUIREMENT EFFECTIVE JANUARY 1ST, 2026.

CURRENTLY HVAC MANUFACTURER'S HAVE NOT RELEASED EQUIPMENT SELECTIONS USING THIS NEW A2L REFRIGERANT THEREFORE THE MECHANICAL SCHEDULES ON THIS SHEET STILL CONTAIN EQUIPMENT BEING MANUFACTURED WITH R-410A REFRIGERANT.

THE R-410A REFRIGERANT EQUIPMENT CAN ONLY BE UTILIZED IF THE PRODUCT WAS MANUFACTURED PRIOR TO JANUARY 1ST, 2025 AND IS INSTALLED AND CHARGED PRIOR TO JANUARY 1ST, 2026.

THE MECHANICAL CONTRACTOR IS RESPONSIBLE FOR NOTIFYING THE MECHANICAL ENGINEER IF THE DATE OF EQUIPMENT PURCHASE AND INSTALLATION WILL AFFECT THE REQUIRED EQUIPMENT REFRIGERANT. IF THE MECHANICAL CONTRACTOR CAN NOT ENSURE THAT THE EQUIPMENT WILL BE PURCHASED AND INSTALLED PRIOR TO JANUARY 1ST, 2026 THEY ARE RESPONSIBLE TO PLAN, PURCHASE AND INSTALL A2L APPROVED EQUIPMENT FOR THE PROJECT.

IF MECHANICAL CONTRACTOR DETERMINES A2L EQUIPMENT WILL BE REQUIRED FOR THE PROJECT PLEASE PROVIDE SUBMITTALS TO THE MECHANICAL ENGINEER FOR APPROVAL PRIOR TO PURCHASE.

# OUTSIDE AIR CALCULATIONS

| CLASSIFICATION | OCC. FACTOR OCCUPANCY/ 1000 SQFT. (PERSONS) | FBC-M SECTION 403 VALUES PER TABLE 403.3.1.1 | | SPACE AREA (SQFT) | SPACE LOAD (PERSONS) | OUTDOOR AIR REQUIRED (CFM) | OUTDOOR AIR SUPPLIED (CFM) |
|---|---|---|---|---|---|---|---|
| | | Rp | Ra | Az | Pz | | |
| RTU-1 | | | | | | | |
| CONFERENCE | 50 | 5 | 0.06 | 479 | 12 | 88.74 | 90 |
| RTU-2 | | | | | | | |
| OFFICE | 5 | 5 | 0.06 | 594 | 21 | 140.64 | 145 |
| CORRIDOR | 0 | 0 | 0.06 | 314 | 0 | 18.84 | 20 |
| STORAGE | 0 | 0 | 0.12 | 130 | 0 | 15.60 | 20 |
| RTU-3 | | | | | | | |
| EXAM ROOM | 5 | 5 | 0.06 | 661 | 14 | 109.66 | 110 |
| CORRIDOR | 0 | 0 | 0.06 | 557 | 0 | 33.42 | 35 |
| IT CLOSET | 0 | 0 | 0.12 | 17 | 0 | 2.04 | 5 |
| RTU-4 | | | | | | | |
| EXAM ROOM | 5 | 5 | 0.06 | 661 | 14 | 109.66 | 110 |
| RTU-5 | | | | | | | |
| PET/CT | 5 | 5 | 0.18 | 501 | 2 | 100.18 | 105 |
| EQUIPMENT ROOM | 0 | 0 | 0.12 | 162 | 0 | 19.44 | 20 |
| PET/CT | 5 | 5 | 0.06 | 225 | 3 | 28.5 | 30 |
| RTU-6 | | | | | | | |
| EXAM ROOM | 5 | 5 | 0.06 | 1095 | 18 | 155.7 | 160 |
| CORRIDOR | 0 | 0 | 0.06 | 380 | 0 | 22.8 | 25 |
| RTU-7 | | | | | | | |
| EXAM ROOM | 5 | 5 | 0.06 | 1082 | 20 | 164.92 | 165 |
| CORRIDOR | 0 | 0 | 0.06 | 652 | 0 | 39.12 | 40 |
| RTU-8 | | | | | | | |
| ECHO ROOM | 5 | 5 | 0.06 | 492 | 10 | 79.52 | 80 |
| GYM | 20 | 10 | 0.18 | 332 | 6 | 139.92 | 140 |
| X-RAY | 10 | 5 | 0.18 | 190 | 2 | 44.2 | 45 |
| STORAGE | 0 | 0 | 0.06 | 520 | 0 | 31.2 | 35 |
| RTU-9 | | | | | | | |
| ENTRY LOBBY | 10 | 5 | 0.06 | 331 | 2 | 29.86 | 30 |
| LOBBY | 30 | 7.5 | 0.06 | 584 | 33 | 282.54 | 285 |
| CORRIDOR | 0 | 0 | 0.06 | 103 | 0 | 6.18 | 10 |
| OFFICE | 5 | 5 | 0.06 | 404 | 9 | 69.25 | 70 |
| RTU-10 | | | | | | | |
| LOBBY | 30 | 7.5 | 0.06 | 950 | 40 | 357 | 360 |
| RECEPTION | 30 | 5 | 0.06 | 144 | 3 | 23.64 | 25 |
| OFFICE | 5 | 5 | 0.06 | 107 | 1 | 11.42 | 15 |
| TOTAL | – | – | – | 11667 | 210 | 2123.99 | 2,175 |

NOTES:
1. REQUIRED OUTDOOR VENTILATION AIR VALUES TAKEN FROM FBC-M SECTION 403, TABLE 403.3.1.1.
   VENTILATION BREATHING ZONE FORMULA: Vbz = Rp * Pz + Ra * Az
   Pz = OCCUPANCY FACTOR * SPACE AREA

*AREA DOES NOT INCLUDE RESTROOMS.

# AIR BALANCE

**EXHAUST:**

| | |
|---|---|
| EF-1 | 284 CFM |
| EF-2 | 51 CFM |
| EF-3 | 100 CFM |
| EXHAUST TOTAL: | 435 CFM |

**MAKEUP AIR:**

| | |
|---|---|
| RTU-1 | 90 CFM |
| RTU-2 | 185 CFM |
| RTU-3 | 150 CFM |
| RTU-4 | 235 CFM |
| RTU-5 | 155 CFM |
| RTU-6 | 185 CFM |
| RTU-7 | 205 CFM |
| RTU-8 | 305 CFM |
| RTU-9 | 395 CFM |
| RTU-10 | 400 CFM |
| MAKEUP TOTAL: | 2,305 CFM |

BUILDING PRESSURE = +1,870
(WITH ALL FANS ACTIVATED)

# FAN SCHEDULE

| MARK | AREA SERVED | TYPE | CFM | T.S.P. | HP/WATTS | RPM | VOLTS/PH | SONES | WEIGHT | MANUFACTURER & MODEL NO. | NOTES |
|---|---|---|---|---|---|---|---|---|---|---|---|
| EF-1 | RESTROOM | CEILING | 71 | 0.5 | 80 WATTS | 950 | 120/1ø | 2.0 | 10.0 | GREENHECK-SP-B110 | 1. & 2. |
| EF-2 | JANITOR | CEILING | 51 | 0.5 | 80 WATTS | 709 | 120/1ø | 1.5 | 10.0 | GREENHECK-SP-B110 | 1. & 3. |
| EF-3 | BIO/LINEN | CEILING | 100 | 0.5 | 24 WATTS | 1,205 | 120/1ø | 3.5 | 24.0 | GREENHECK-SP-A390-VG | 1. & 3. |

NOTES:
1. PROVIDE WITH VIBRATION ISOLATORS, INTEGRAL BACKDRAFT DAMPER, MOTION SENSOR, MULTI-SPEED MODULE (ACCESSORIES TO FAN), AND GRS ROOF CAP.
2. EXHAUST FAN TO OPERATE ON OCCUPANCY SENSOR (ACCESSORY TO FAN).
3. EXHAUST FAN TO OPERATE ON TIME CLOCK (ACCESSORY TO FAN).

7

# MINI-SPLIT AIR HANDLING UNIT SCHEDULE

| | | FAN | | | | COOLING COIL | | | FILTERS | | HEATING CAPACITY | SINGLE POINT UNIT ELECTRICAL REQUIREMENTS | | | UNIT INFORMATION | | | | | |
|---|---|---|---|---|---|---|---|---|---|---|---|---|---|---|---|---|---|---|---|---|
| MARK | LOCATION SERVED | HIGH AIR FLOW (CFM) | LOW AIR FLOW (CFM) | OUTSIDE AIR FLOW (CFM) | FLA | ENTERING AIR TEMP. (F° DB/WB) | LEAVING AIR TEMP. (F° DB/WB) | TOTAL CAPACITY (BTUH) | TYPE | EFFICIENCY | TOTAL CAPACITY (BTUH) | VOLTAGE/ PHASE | SINGLE CIRCUIT MCA | SINGLE CIRCUIT MOCP | UNIT SIZE (H"xW"xD") | OPERATING WEIGHT (LBS.) | MANUFACTURER | MODEL NUMBER | MOUNTING | NOTES |
| MAU-1 | FACP | 441 | 147 | N/A | – | 75.0/63.0 | 56.0/54.0 | 12,000 | INTERNAL | 25%-30% | 12,000 | 208V/1ø | REFER TO MCU SCHEDULE | REFER TO MCU SCHEDULE | 12"x31"x9" | 23 | CARRIER OR EQUAL | 45MAHAQ12XA3 | WALL | 1., 2. & 3. |
| MAU-2 | TRANSFORMER STORAGE | 635 | 294 | N/A | – | 75.0/63.0 | 56.0/54.0 | 18,000 | INTERNAL | 25%-30% | 18,000 | 208V/1ø | REFER TO MCU SCHEDULE | REFER TO MCU SCHEDULE | 13"x38"x10" | 28 | CARRIER OR EQUAL | 45MAHAQ18XA3 | WALL | 1., 2. & 3. |

NOTES:
1. POWER FOR INDOOR UNIT PROVIDED FROM EXTERIOR CONDENSER. COORDINATE WITH ELECTRICAL CONTRACTOR TO PROVIDE POWER WIRING BETWEEN EACH UNIT IN FIELD.
2. ROUTE AND SIZE REFRIGERANT LINES PER MANUFACTURER'S REQUIREMENTS.
3. MOUNT AS HIGH ON WALL AS POSSIBLE. PROVIDE CONDENSATE PUMP WHERE REQUIRED.

# MINI-SPLIT CONDENSING UNIT SCHEDULE (HEAT PUMP)

| MARK | LOCATION | COMPRESSOR | | | | CONDENSER FANS | | | ELECTRICAL | | | UNIT INFORMATION | | | | MANUFACTURER | MODEL NUMBER | NOTES |
|---|---|---|---|---|---|---|---|---|---|---|---|---|---|---|---|---|---|---|
| | | OUTDOOR DESIGN TEMP. (F°) | QTY. | CAPACITY STEPS % | RLA/LRA EACH | QTY. | HP | FLA EACH | VOLTAGE/PHASE | MCA | MOCP | SEER2 | HSPF2 | UNIT SIZE (H"xW"xD") | OPERATING WEIGHT (LBS.) | | | |
| MCU-1 | ROOF | 95° | 1 | 100 | –/– | 1 | – | – | 208V/1ø | 12.0 | 15 | 26 | 13.9 | 22"x30"x12" | 62 | CARRIER OR EQUAL | 37MARAQ12AA3 | |
| MCU-2 | ROOF | 95° | 1 | 100 | –/– | 1 | – | – | 208V/1ø | 18.0 | 20 | 23.5 | 12.8 | 27"x36"x14" | 93 | CARRIER OR EQUAL | 37MARAQ18AA3 | 1., 2. & 3. |

NOTES:
1. PROVIDE COMPLETE WITH PULL TYPE DISCONNECT SWITCH (PROVIDED BY DIVISION 16) TIME DELAY RELAY AND ANTI-SHORT CYCLE TIMER.
2. TOTAL DEVELOPED LINESET LENGTH, INCLUDING HORIZONTAL AND VERTICAL DISTANCE, TO BE VERIFIED WITH CONDENSING UNIT MANUFACTURER PRIOR TO PURCHASE. IF CONDENSING UNIT LOCATIONS EXCEED THE MANUFACTURER'S RECOMMENDED TOTAL LINESET LENGTH VERIFY THE MANUFACTURER HAS AN OPTION TO ALLOW FOR LONG LINESETS AND PROVIDE ACCESSORIES AS REQUIRED.
3. MOUNT AND SECURE CONDENSING UNITS PER DETAILS PROVIDED.

# HORIZONTAL DUCTED UNIT SCHEDULE (SECOND FLOOR)

| | | FAN | | | | | COOLING COIL | | | FILTERS | | | ELECTRIC HEATING COIL | | SINGLE POINT UNIT ELECTRICAL REQUIREMENTS | | | UNIT INFORMATION | | | | | |
|---|---|---|---|---|---|---|---|---|---|---|---|---|---|---|---|---|---|---|---|---|---|---|---|
| MARK | LOCATION SERVED | TOTAL AIR FLOW (CFM) | OUTSIDE AIR FLOW (CFM) | EXTERNAL STATIC PRESS. (IN.WG.) | DRIVE TYPE | FLA | ENTERING AIR TEMP. (F° DB/WB) | LEAVING AIR TEMP. (F° DB/WB) | TOTAL CAPACITY (BTUH) | TYPE | EFFICIENCY | THICKNESS | TOTAL CAPACITY (BTUH) | HEATER WATTS | VOLTAGE/ PHASE | SINGLE CIRCUIT MCA | SINGLE CIRCUIT MOCP | UNIT SIZE (H"xW"xD") | OPERATING WEIGHT (LBS.) | MANUFACTURER | MODEL NUMBER | MOUNTING | NOTES |
| HDU-1 | EQUIPMENT ROOM | 1,200 | – | – | – | 2.80 | 80.0/67.0 | 56.0/54.0 | 33,000 | INTERNAL | 25%-30% | – | 23,300 | 2,700 | 208V/1ø | 3.5 | – | 10"x56"x29" | 82 | MITSUBISHI OR EQUAL | PEAD-A36AA9 | SUSPENDED | 1., 2. & 3. |
| HDU-2 | NUCLEAR IMAGING | 300 | – | 0.4 | – | 1.70 | 80.0/67.0 | 56.0/54.0 | 9,000 | INTERNAL | 25%-30% | – | 12,000 | 1,090 | 208V/1ø | 2.13 | – | 10"x36"x29" | 58 | MITSUBISHI OR EQUAL | PEAD-A09AA9 | SUSPENDED | 1., 2. & 3. |

NOTES:
1. POWER FOR INDOOR UNIT PROVIDED FROM EXTERIOR CONDENSER. COORDINATE WITH ELECTRICAL CONTRACTOR TO PROVIDE POWER WIRING BETWEEN EACH UNIT IN FIELD.
2. ROUTE AND SIZE REFRIGERANT LINES PER MANUFACTURER'S REQUIREMENTS.
3. SUSPEND FROM ROOF IN EASILY ACCESSIBLE AREA. PROVIDE CONDENSATE PUMP WHERE REQUIRED.

# HORIZONTAL DUCTED CONDENSING UNIT SCHEDULE (HEAT PUMP) (SECOND FLOOR)

| MARK | LOCATION | COMPRESSOR | | | | CONDENSER FANS | | | ELECTRICAL | | | UNIT INFORMATION | | | | MANUFACTURER | MODEL NUMBER | NOTES |
|---|---|---|---|---|---|---|---|---|---|---|---|---|---|---|---|---|---|---|
| | | OUTDOOR DESIGN TEMP. (F°) | QTY. | CAPACITY STEPS % | RLA/LRA EACH | QTY. | HP | FLA EACH | VOLTAGE/PHASE | MCA | MOCP | SEER2 | HSPF2 | UNIT SIZE (H"xW"xD") | OPERATING WEIGHT (LBS.) | | | |
| HCU-1 | ROOF | 95° | 1 | 100 | 13.0/16.0 | 1 | – | 1.0 | 208V/1ø | 17 | 31 | 17.5 | 9.8 | 35"x34"x13" | 129 | MITSUBISHI OR EQUAL | SUZ-KA36NA2 | 1., 2. & 3. |
| HCU-2 | ROOF | 95° | 1 | 100 | 6.2/7.7 | 1 | – | 0.5 | 208V/1ø | 9 | 15 | 19.9 | 11.1 | 22"x34"x12" | 81 | MITSUBISHI OR EQUAL | SUZ-KA09NA2 | 1., 2. & 3. |

NOTES:
1. PROVIDE COMPLETE WITH PULL TYPE DISCONNECT SWITCH (PROVIDED BY DIVISION 16) TIME DELAY RELAY AND ANTI-SHORT CYCLE TIMER.
2. TOTAL DEVELOPED LINESET LENGTH, INCLUDING HORIZONTAL AND VERTICAL DISTANCE, TO BE VERIFIED WITH CONDENSING UNIT MANUFACTURER PRIOR TO PURCHASE. IF CONDENSING UNIT LOCATIONS EXCEED THE MANUFACTURER'S RECOMMENDED TOTAL LINESET LENGTH VERIFY THE MANUFACTURER HAS AN OPTION TO ALLOW FOR LONG LINESETS AND PROVIDE ACCESSORIES AS REQUIRED.
3. MOUNT AND SECURE CONDENSING UNITS PER DETAILS PROVIDED.

# ROOF TOP UNIT SCHEDULE (SECOND FLOOR)

| PLAN MARK | EVAPORATOR SECTION | | | | | | | | | | DEHUMIDIFICATION | HEATER | | CONDENSER SECTION | | | ELECTRICAL REQUIREMENTS | | | UNIT WEIGHT (LBS.) | EER | IEER/SEER2 | MANUFACTURER AND MODEL NUMBER | NOTES |
|---|---|---|---|---|---|---|---|---|---|---|---|---|---|---|---|---|---|---|---|---|---|---|---|---|
| | LOCATION SERVED | SUPPLY AIRFLOW (CFM) | OUTSIDE AIRFLOW (CFM) | E.A.T. (DB/WB) | L.A.T. (DB/WB) | TOTAL COOLING (MBH) | SENSIBLE COOLING (MBH) | E.S.P. (IN. WG.) | H.P. | R.P.M. | HUMIDITROL (HGRH) | HEATER (KW) | HEATER STAGES | NO. COMPRESSOR | COMPRESSOR RLA (EACH) | CONDENSER FAN FLA | V/ø | M.C.A. | M.O.C.P. | | | | | |
| RTU-1 | CONFERENCE | 1,200 | 90 | 77.0/65.0 | 54.5/54.2 | 37.6 | 27.0 | 0.8 | 1.0 | 997.4 | YES | 7.5 | 1 | 1 | 8.7 | 1.7 | 208/3ø | 26 | 30 | 915 | 12.3 | –/13.5 | LENNOX KCB036 | 1.-5. |
| RTU-2 | ADMINISTRATIVE OFFICE | 1,200 | 185 | 77.0/65.0 | 54.5/54.2 | 37.6 | 27.0 | 0.8 | 1.0 | 997.4 | YES | 7.5 | 1 | 1 | 8.7 | 1.7 | 208/3ø | 26 | 30 | 915 | 12.3 | –/13.5 | LENNOX KCB036 | 1.-5. |
| RTU-3 | EXAM ROOM | 1,460 | 150 | 77.0/65.0 | 54.9/53.8 | 47.1 | 33.5 | 0.8 | 1.0 | 1038.2 | YES | 7.5 | 1 | 1 | 11 | 1.7 | 208/3ø | 26 | 30 | 915 | 11.5 | –/13.4 | LENNOX KCB048 | 1.-5. |
| RTU-4 | EXAM ROOM | 1,460 | 235 | 77.0/65.0 | 54.9/53.8 | 47.1 | 33.5 | 0.8 | 1.0 | 1038.2 | YES | 7.5 | 1 | 1 | 11 | 1.7 | 208/3ø | 26 | 30 | 915 | 11.5 | –/13.4 | LENNOX KCB048 | 1.-5. |
| RTU-5 | PET/CT SCAN | 1,200 | 155 | 77.0/65.0 | 54.5/54.2 | 37.6 | 27.0 | 0.8 | 1.0 | 997.4 | YES | 7.5 | 1 | 1 | 8.7 | 1.7 | 208/3ø | 26 | 30 | 915 | 12.3 | –/13.5 | LENNOX KCB036 | 1.-5. |
| RTU-6 | PHYSICIAN OFFICE | 1,460 | 185 | 77.0/65.0 | 54.9/53.8 | 47.1 | 33.5 | 0.8 | 1.0 | 1038.2 | YES | 7.5 | 1 | 1 | 11 | 1.7 | 208/3ø | 26 | 30 | 915 | 11.5 | –/13.4 | LENNOX KCB048 | 1.-5. |
| RTU-7 | ADMINISTRATIVE OFFICE | 2,000 | 205 | 77.0/65.0 | 54.9/54.3 | 62.0 | 45.9 | 0.8 | 1.0 | 1142.4 | YES | 7.5 | 1 | 1 | 16 | 1.7 | 208/3ø | 27 | 40 | 1,099 | 11.0 | –/13.4 | LENNOX KCB060 | 1.-6. |
| RTU-8 | STRESS TEST/ECHO | 2,000 | 305 | 77.0/65.0 | 54.9/54.3 | 62.0 | 45.9 | 0.8 | 1.0 | 1142.4 | YES | 7.5 | 1 | 1 | 16 | 1.7 | 208/3ø | 27 | 40 | 1,099 | 11.0 | –/13.4 | LENNOX KCB060 | 1.-6. |
| RTU-9 | WAITING ROOM | 2,000 | 395 | 77.0/65.0 | 54.9/54.3 | 62.0 | 45.9 | 0.8 | 1.0 | 1142.4 | YES | 7.5 | 1 | 1 | 16 | 1.7 | 208/3ø | 27 | 40 | 1,099 | 11.0 | –/13.4 | LENNOX KCB060 | 1.-6. |
| RTU-10 | WAITING ROOM | 2,000 | 400 | 77.0/65.0 | 54.9/54.3 | 62.0 | 45.9 | 0.8 | 1.0 | 1142.4 | YES | 7.5 | 1 | 1 | 16 | 1.7 | 208/3ø | 27 | 40 | 1,099 | 11.0 | –/13.4 | LENNOX KCB060 | 1.-6. |

NOTES:
1. PROVDE COMPLETE WITH NON-FUSED DISCONNECT SWITCH, ROOF CURB, THROUGH THE BASE ELECTRICAL CONNECTION AND UNIT MOUNTED POWERED SERVICE RECEPTACLE. ROUTE FULL SIZE CONDENSATE TO NEAREST DRAIN.
2. PROVIDE MOTORIZED OUTSIDE AIR DAMPER. OUTSIDE AIR DAMPER SHALL CLOSE WHEN EVAPORATOR FAN MOTOR IS OFF.
3. PROVIDE VIBRATION ISOLATOR KIT FOR ROOF TOP UNIT MOUNTING.
4. PROVIDE WITH ENTHALPY ECONOMIZER WITH BAROMETRIC RELIEF WHERE REQUIRED.
5. PROVIDE RTU WITH LENNOX HUMIDITROL DEHUMIDIFICATION SYSTEM.
6. PROVIDE SUPPLY AND RETURN DUCT MOUNTED SMOKE DETECTOR FOR UNITS 2000 CFM AND OVER.

OWNER / PROJECT:

THE CARDIOVASCULAR CENTER OF FLORIDA

A NEW MEDICAL OFFICE BUILDING

CLERMONT, FL

M3.1

Scale As indicated

## FLEX DUCT SCHEDULE

| CFM | FLEX SIZE |
|---|---|
| 0 – 100 | 6"ø |
| 101 – 200 | 8"ø |
| 201 – 400 | 10"ø |
| 401 – 600 | 12"ø |
| 601 – 900 | 14"ø |
| 901 – 1,300 | 16"ø |
| 1,300 – 1,700 | 18"ø |

## DOOR GRILLE SCHEDULE

| MARK | SERVICE | W x H (IN) | MANUFACTURER & MODEL NO. | NOTES |
|---|---|---|---|---|
| DG–1 | VENTILATION | 12"x12" | HART & COOLEY TG | 1. & 2. |
| DG–2 | VENTILATION | 24"x24" | HART & COOLEY TG | 1. & 2. |

NOTES:
1. PROVIDE HART AND COOLEY TGF FRAME.
2. GRILLE TO BE INSTALLED ON BOTH SIDES OF THE DOOR.

## AIR DEVICE SCHEDULE

| MARK | DESCRIPTION | FACE SIZE | NECK | MATERIAL | MANUFACTURER & MODEL NO. | NOTES |
|---|---|---|---|---|---|---|
| A | SQUARE CONE SUPPLY DIFFUSER | 24"x24" | SEE SCHED. | ALUMINUM | PRICE ASCD | 1., 2., 3., & 4. |
| B | SQUARE CONE SUPPLY DIFFUSER | 12"x12" | SEE SCHED. | ALUMINUM | PRICE ASCD | 1., 2., 3., & 4. |
| C | EGGCRATE RET./EXH. GRILLE (1/2"x1/2"x1/2") | 24"x24" | SEE SCHED. | ALUMINUM | PRICE 80 | 1. & 2. |
| D | EGGCRATE RET./EXH. GRILLE (1/2"x1/2"x1/2") | 12"x12" | SEE SCHED. | ALUMINUM | PRICE 80 | 1., 2. & 3. |

NOTES:
1. COORIDINATE SURFACE FINISHES WITH ARCHITECTURAL DRAWINGS.
2. PROVIDE RAPID MOUNT FRAME FOR PLASTER AND SHEET ROCK CEILINGS.
3. SUPPLY COMPLETE FACTORY INSTALLED 1/2" THICK FOIL BACKED INSULATION.
4. PROVIDE REMOTE DAMPERS FOR AIR DEVICE IN HARD CEILING.

## LOUVER SCHEDULE

| MARK | SERVICE | AIR FLOW (CFM) | FREE AREA (SF) | W x H (IN) | MAX. VELOCITY IN FPM | MAX. PRESSURE DROP (IN H20) | MANUFACTURER & MODEL NO. | NOTES |
|---|---|---|---|---|---|---|---|---|
| L–1 | EXHAUST AIR | 500 | 0.7 | 18"x18" | 675 | 0.190 | GREENHECK EHV–550–18X18 | 1. & 2. |
| L–2 | OUTSIDE AIR | 1044 | 5.2 | 72"x24" | 1083 | 0.008 | GREENHECK EHV–550–72X24 | 1. & 2. |
| L–3 | EXHAUST AIR | 500 | 2.0 | 30"x24" | 253 | 0.027 | GREENHECK EHV–550–30X24 | 1. & 2. |
| L–4 | EXHAUST AIR | 500 | 2.0 | 30"x24" | 253 | 0.027 | GREENHECK EHV–550–30X24 | 1. & 2. |

NOTES:
1. PROVIDE BIRD SCREEN.
2. PROVIDE GRAVITY BACK DRAFT DAMPER ON INTERIOR SIDE OF LOUVER.

OWNER / PROJECT:

THE CARDIOVASCULAR CENTER OF FLORIDA

A NEW MEDICAL OFFICE BUILDING

CLERMONT, FL

M3.2

Scale As indicated

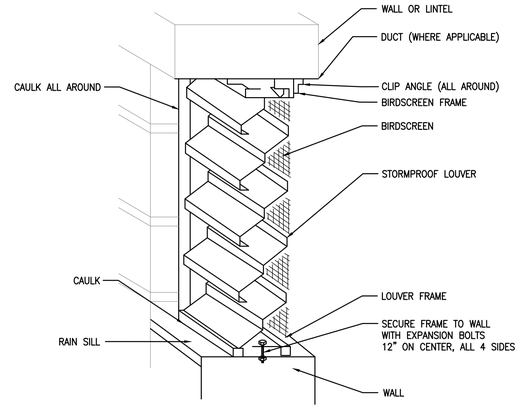


## 8 NTS TYPICAL WALL LOUVER DETAIL

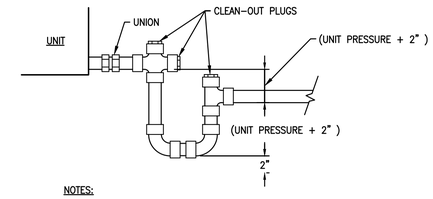


NOTES:

1. CONDENSATE DRAIN SHALL BE PIPED FULL SIZE OF UNIT CONNECTION.
2. CONDENSATE PANS SHALL BE INSTALLED WITH ADEQUATE PITCH TO ENSURE POSITIVE DRAINAGE OF ACCUMULATED CONDENSATE.
3. TRAP CONDENSATE AND DISCHARGE PER PLAN.

## 7 NTS CONDENSATE DRAIN DETAIL

**Condensate Piping Supports**
**MAPA Model MS -1**

**Spacing for MS-1 condensate support**

| Pipe IPS | Copper | PVC |
|---|---|---|
| 1-1/2" and smaller | 5' | 4' |
| 2" | 8' | 4' |
| 2" and larger | 10' | 4' |

***Maximum recommended spacing on all roller supports is 10'***
***Additional support recommended at each change of direction***

MAPA Products / 877-897-2371
Naples, Texas

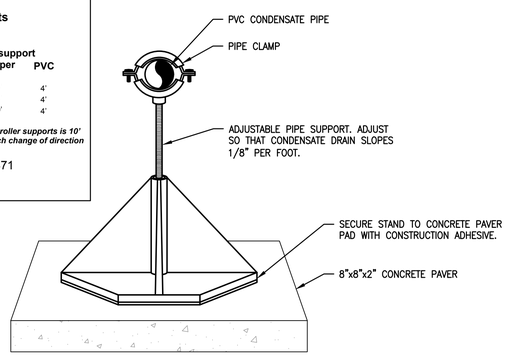


NOTES:

1. SUPPORTS SHALL BE INSTALLED PER SCHEDULE AT LEFT.

## 6 NTS CONDENSATE PIPE STAND DETAIL

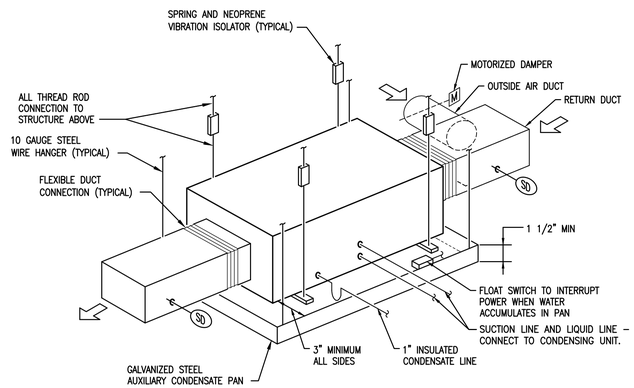


## 5 NTS TYPICAL SUSPENDED AHU DETAIL

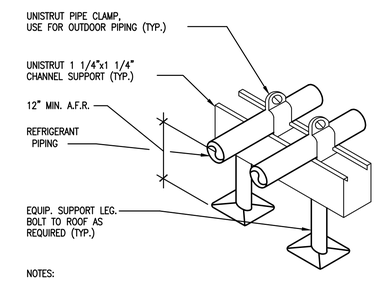


NOTES:

1. SUPPORTS SHALL BE INSTALLED A MAXIMUM 8'-0" O.C. AND AT EACH CHANGE OF DIRECTION OF PIPING.

## 4 NTS ROOF PIPING SUPPORT DETAIL

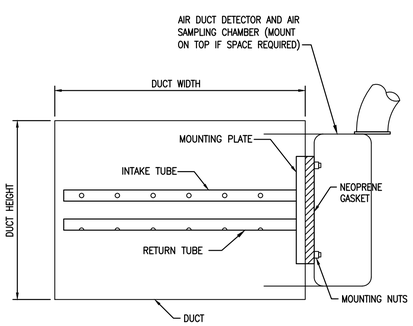


NOTES:

1. INSTALL IN STRICT ACCORDANCE WITH MANUFACTURER'S INSTALLATION INSTRUCTIONS.
2. PROVIDE ACCESS DOOR AT SAMPLING TUBES.

## 3 NTS SMOKE DETECTOR DETAIL

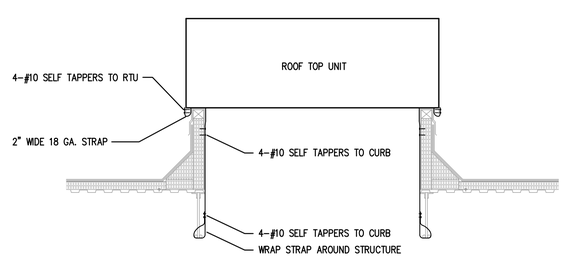


## 2 NTS ROOF TOP UNIT TIE-DOWN DETAIL

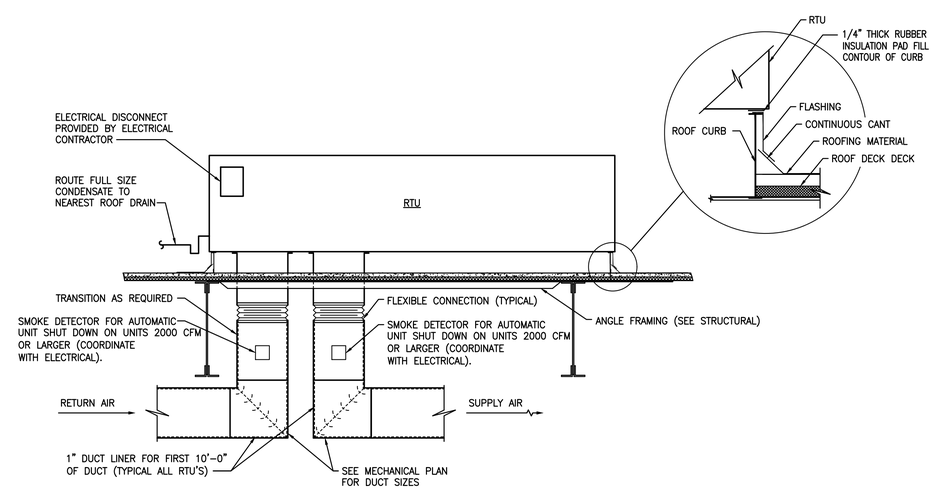


## 1 NTS RTU INSTALLATION DETAIL

OWNER / PROJECT:

THE CARDIOVASCULAR CENTER OF FLORIDA

A NEW MEDICAL OFFICE BUILDING

CLERMONT, FL

M4.1

Scale As indicated

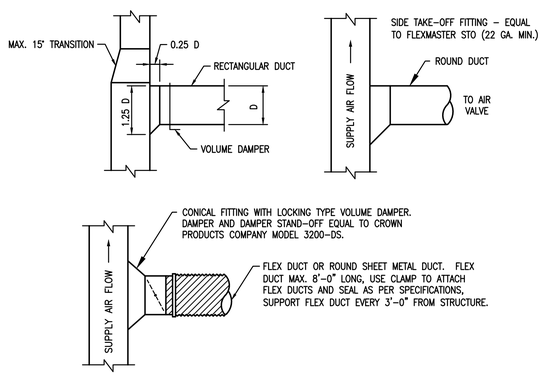


6 NTS DUCT CONNECTION DETAIL

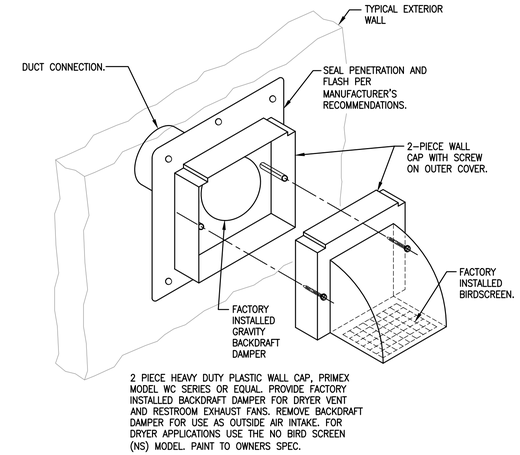


8 NTS TYPICAL WALL JACK DETAIL

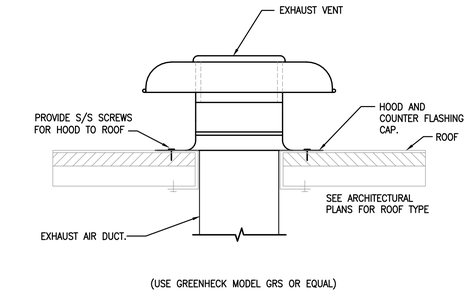


7 NTS EXHAUST VENT CAP GRS DETAIL

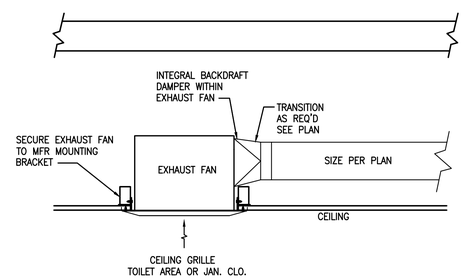


5 NTS CEILING FAN SUPPORT DETAIL

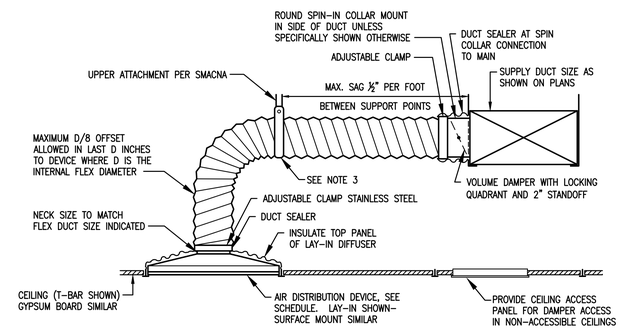


NOTES:

1. EXTEND FLEXIBLE DUCT INSULATION TO DUCT/DIFFUSER PANEL INSULATION AND SEAL WITH MASTIC.
2. MINIMUM 1-1/2" WIDE 22 GAUGE GALVANIZED STRAP HANGER WITH HEMMED EDGES PER SMACNA FIGURE 3-10.
3. FLEXIBLE AIR DUCT SHALL BE FULLY EXTENDED AND NOT COMPRESSED WITH ELBOW RADIUS NO LESS THAN R/D=1.0.

4 NTS FLEXIBLE DUCT DETAIL

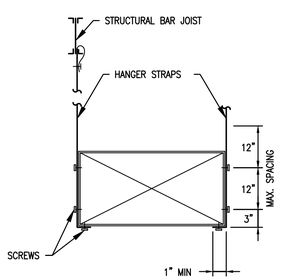


NOTES :

1. MAXIMUM SPACING BETWEEN HANGER LOCATIONS SHALL BE 8'-0" PER PAIR.
2. STRAPS SHALL BE MINIMUM 1 1/2" x 22 GAUGE GALVANIZED STEEL.
3. REFER TO SMACNA FOR ADDITIONAL REQUIREMENTS.

3 NTS DUCTWORK SUPPORT DETAIL

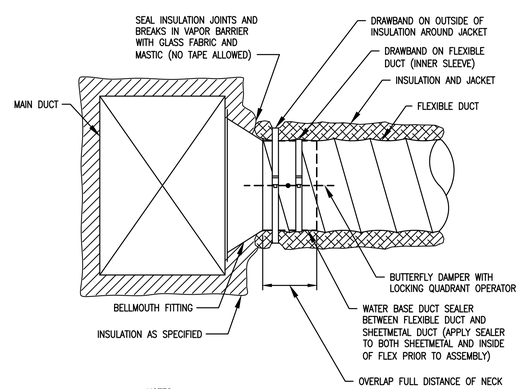


NOTES:

1. TYPICAL FOR: LOW PRESSURE AND HIGH PRESSURE CONNECTION TO MAIN DUCT, FAN TERMINAL UNITS, VARIABLE AIR VOLUME UNITS, AND DIFFUSERS.
2. DRAWBANDS SHALL BE EQUIVALENT TO PANDUIT PLT-H.

2 NTS FLEXIBLE DUCT CONNECTION DETAIL

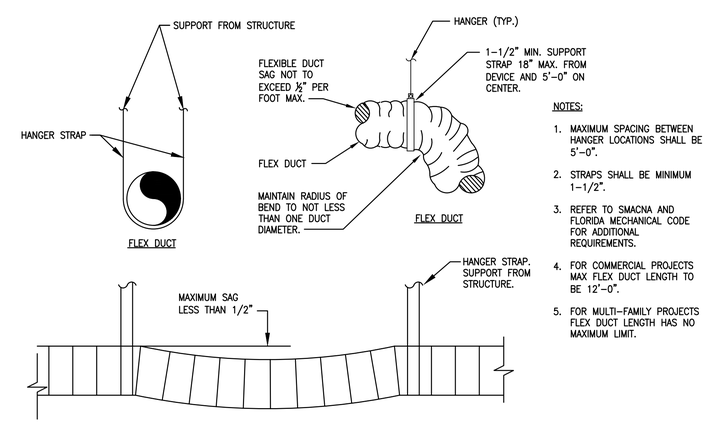


NOTES:

1. MAXIMUM SPACING BETWEEN HANGER LOCATIONS SHALL BE 5'-0".
2. STRAPS SHALL BE MINIMUM 1-1/2".
3. REFER TO SMACNA AND FLORIDA MECHANICAL CODE FOR ADDITIONAL REQUIREMENTS.
4. FOR COMMERCIAL PROJECTS MAX FLEX DUCT LENGTH TO BE 12'-0".
5. FOR MULTI-FAMILY PROJECTS FLEX DUCT LENGTH HAS NO MAXIMUM LIMIT.

1 NTS FLEX DUCT HANGER DETAIL

OWNER / PROJECT:

THE CARDIOVASCULAR CENTER OF FLORIDA

A NEW MEDICAL OFFICE BUILDING

CLERMONT, FL

M4.2

Scale As indicated

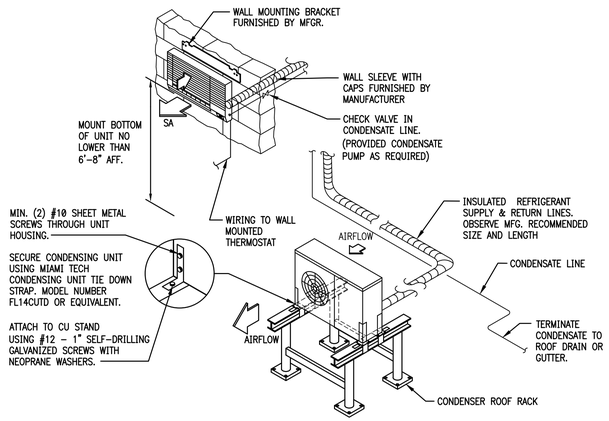


4 NTS WALL MOUNTED SPLIT SYSTEM SUPPORT DETAIL

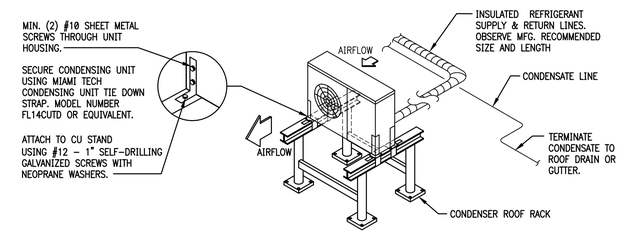


3 NTS CONDENSER SPLIT SYSTEM SUPPORT DETAIL

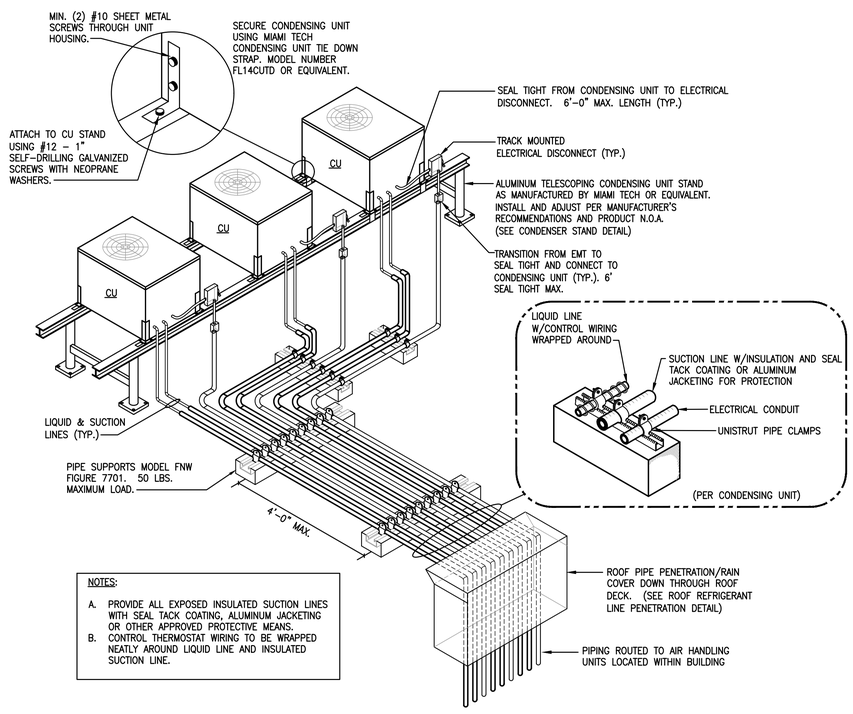


NOTES:

A. PROVIDE ALL EXPOSED INSULATED SUCTION LINES WITH SEAL TACK COATING, ALUMINUM JACKETING OR OTHER APPROVED PROTECTIVE MEANS.
B. CONTROL THERMOSTAT WIRING TO BE WRAPPED NEATLY AROUND LIQUID LINE AND INSULATED SUCTION LINE.

2 NTS ROOF MOUNTED CONDENSING UNIT PIPING DETAIL

NOTE:
ALL ROOF TOP EQUIPMENT AND SUPPORTS SHALL BE SECURED TO THE STRUCTURE IN COMPLIANCE WITH THE LOADING REQUIREMENTS OF CHAPTER 16 (HIGH-VELOCITY HURRICANE ZONES)

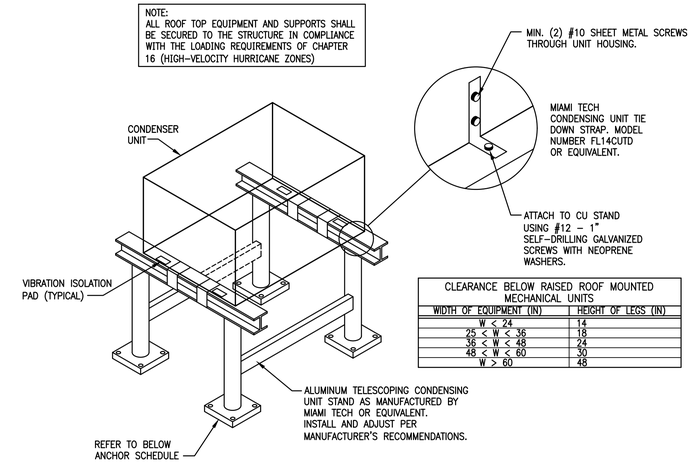


CLEARANCE BELOW RAISED ROOF MOUNTED MECHANICAL UNITS

| WIDTH OF EQUIPMENT (IN) | HEIGHT OF LEGS (IN) |
|---|---|
| W < 24 | 14 |
| 25 < W < 36 | 18 |
| 36 < W < 48 | 24 |
| 48 < W < 60 | 30 |
| W > 60 | 48 |

ANCHOR SCHEDULE

| ANCHOR TYPE | HOST STRUCTURE | ANCHOR DESCRIPTION |
|---|---|---|
| 1 | STEEL | 3/8"ø SAE GRADE 5 SHEET METAL SCREWS WITH 1"ø MIN. WASHER, TO STRUCTURAL A36 STEEL MEMBERS (3/16" MIN HOST THICKNESS) |
| 2 | CONCRETE | 3/8"ø CARBON STEEL WEDGE-BOLT CONCRETE ANCHOR WITH 1"ø MIN. WASHER, 2½" EMBEDMENT & 6" MIN EDGE DISTANCE, 4 ANCHORS PER BASE PLATE, ONE IN EACH CORNER |
| 3 | WOOD | PROVIDE 2" MIN. LAG SCREW TIP TO TIP SPACING & ¾" MIN. WOOD EDGE DISTANCE. |
| 4 | STEEL | 3/8"ø SAE GRADE 5 THRUBOLT WITH 1"ø MIN. WASHER & NUT, TO STRUCTURAL A36 STEEL MEMBERS (3/16" MIN HOST THICKNESS) |

1 NTS CONDENSER RACK DETAIL

OWNER / PROJECT:

THE CARDIOVASCULAR CENTER OF FLORIDA

A NEW MEDICAL OFFICE BUILDING

CLERMONT, FL

M4.3

Scale As indicated

# MECHANICAL SPECIFICATIONS

GENERAL

THE GENERAL MECHANICAL SPECIFICATIONS APPLY TO THE WORK SPECIFIED IN THIS SECTION.

SCOPE OF WORK

FURNISH AND INSTALL COMPLETE AIR CONDITIONING SYSTEMS AS INDICATED ON THE DESIGN DRAWINGS AND AS OUTLINED WITHIN THESE SPECIFICATIONS. WORK SHALL INCLUDE BUT NOT BE LIMITED TO THE FABRICATION AND/OR INSTALLATION OF THE SCHEDULED AIR CONDITIONING UNITS, EXHAUST FANS, AIR DISTRIBUTION AND DUCTWORK.

CLEANING, TESTING AND ADJUSTING:
THE MECHANICAL CONTRACTOR, AT HIS EXPENSE, SHALL CLEAN, REPAIR, ADJUST, CHECK, BALANCE, AND PLACE IN SERVICE THE VARIOUS SYSTEMS HEREIN SPECIFIED WITH THEIR RESPECTIVE EQUIPMENT, ACCESSORIES AND PIPING. HE SHALL FURNISH ALL LABOR, MATERIALS, EQUIPMENT, AND TOOLS REQUIRED TO PERFORM TESTS REQUIRED BY THESE SPECIFICATIONS AND BY THE GOVERNING AUTHORITIES.

ALL EQUIPMENT AND DUCTWORK OPENINGS ARE TO BE PROVIDED WITH FILTRATION AND SEALING TO PROPERLY PROTECT IT FROM ANY DUST AND DEBRIS DURING CONSTRUCTION.

NO WORK SHALL BE COVERED OR CONCEALED UNTIL PROPERLY INSPECTED AND TESTED.

TESTING:
ADJUST THE AIR CONDITIONING SYSTEMS, VENTILATING SYSTEMS, FANS, ETC., TO DELIVER NOT LESS THAN THE REQUIRED AIR QUANTITY WITH QUANTITIES IN EXCESS TO BE SUBJECT TO THE APPROVAL OF THE ENGINEER IF FOUND TO NOT HAVE OBJECTIONABLE EFFECTS SUCH AS NOISE, DRAFTS, OR MOTOR OVERLOAD.

THIS CONTRACTOR SHALL PROVIDE THREE (3) COPIES OF A TEST AND BALANCE REPORT TO THE OWNER AT TIME OF SUBSTANTIAL COMPLETION INSPECTION.

THE TEST AND BALANCE REPORT SHALL BE TYPEWRITTEN AND CONTAIN THE FOLLOWING DATA:

1. DATE, TIME, WEATHER, WHEN TEST TAKEN.
2. AIR CAPACITIES AT EACH UNIT INCLUDING OUTSIDE AIR. (ENTERING AND LEAVING DB/WB)
3. STATIC PRESSURE THROUGH UNITS AND UNIT COMPONENTS.
4. MOTOR OPERATING VOLTAGE AND AMPERAGE.
5. DRIVE TYPES, SIZES AND SPEED RANGE.
6. IDENTIFICATION OF ALL AIR TERMINAL DEVICES WITH DESIGN CFM AND ACTUAL CFM.

ADDITIONALLY, SYSTEMS DRAWING CLEARLY MARKED TO IDENTIFY LOCATION OF EQUIPMENT AND AIR DEVICES TESTED SHALL BE PROVIDED ALONG WITH THE WRITTEN TEST AND BALANCE REPORT.

MAINTENANCE MANUALS

PROVIDE COMPLETE MAINTENANCE MANUALS (3 REQUIRED) ON ALL NEW EQUIPMENT. ORGANIZE OPERATING AND MAINTENANCE DATA INTO SUITABLE SETS OF MANAGEABLE SIZE. BIND PROPERLY INDEXED DATA INTO INDIVIDUAL, HEAVY-DUTY, 2-INCH, 3-RING VINYL COVERED BINDERS WITH POCKET FOLDERS FOR FOLDED SHEET INFORMATION. MARK APPROPRIATE IDENTIFICATION ON FRONT AND SPINE OF EACH BINDER. INCLUDE THE FOLLOWING TYPES OF INFORMATION. THE INFORMATION WILL BE TURNED OVER TO THE OWNER AT TIME OF SUBSTANTIAL COMPLETION:

- OPERATING AND MAINTENANCE INSTRUCTIONS
- SPARE PARTS LIST
- COPIES OF WARRANTIES
- WIRING DIAGRAMS
- INSPECTION REPORTS AND APPROVALS
- SHOP DRAWINGS AND PRODUCT DATA

TRAINING SERVICES

THOROUGHLY INSTRUCT THE OWNER'S REPRESENTATIVE IN THE OPERATION OF ALL EQUIPMENT FURNISHED AND LOCATION OF ALL VALVES AND CONTROL DEVICES.

TRAIN BUILDING OWNER'S PERSONNEL DURING NORMAL WORKING HOURS ON STARTUP AND SHUTDOWN PROCEDURES, TROUBLESHOOTING PROCEDURES, SERVICING AND PREVENTATIVE MAINTENANCE SCHEDULE AND PROCEDURES. REVIEW WITH THE OWNER'S PERSONNEL, THE DATA CONTAINED IN THE OPERATING AND MAINTENANCE MANUALS. SCHEDULE TRAINING WITH OWNER, PROVIDE AT LEAST 7-DAYS PRIOR NOTICE TO ARCHITECT/ENGINEER.

HANGERS AND SUPPORTS

PROVIDE ALL NECESSARY HANGER RODS, CLAMPS AND ATTACHMENTS TO PROPERLY INSTALL AND SUPPORT DUCTWORK, PIPING AND EQUIPMENT FROM THE BUILDING STRUCTURE.

PROVIDE ANY ANGLE IRON OR UNISTRUT AND SUSPENSION RODS REQUIRED TO INSTALL EQUIPMENT, PIPING AND DUCTWORK.

ALL SUPPORTS EXPOSED TO OUTDOORS SHALL BE CLEANED, PRIMED AND PAINTED TO PREVENT RUSTING. FINISH COLOR AS SELECTED BY OWNER.

THE USE OF BALING WIRE OR PERFORATED METAL STRAPPING IS NOT ACCEPTABLE FOR SUPPORTS.

WARRANTY/GUARANTEE:

THE CONTRACTOR SHALL WARRANTY/GUARANTEE AND MAINTAIN THE STABILITY OF WORK AND MATERIALS AND KEEP SAME IN PERFECT REPAIR AND CONDITION OF THE PERIOD OF ONE (1) YEAR.

DEFECTS OF ANY KIND DUE TO FAULTY WORK OR MATERIALS APPEARING DURING THE ABOVE MENTIONED PERIOD MUST BE IMMEDIATELY MADE GOOD BY THE CONTRACTOR AT HIS OWN EXPENSE TO THE ENTIRE SATISFACTION OF THE OWNER AND ARCHITECT AND ENGINEER. SUCH RECONSTRUCTION AND REPAIRS SHALL INCLUDE ALL DAMAGE TO THE FINISH OR FURNISHING OF THE BUILDING RESULTING FROM THE ORIGINAL DEFECT OR REPAIRS THERETO.

EQUIPMENT:

1.1 QUALITY ASSURANCE

A. ELECTRICAL COMPONENTS, DEVICES, AND ACCESSORIES: LISTED AND LABELED AS DEFINED IN NFPA 70, ARTICLE 100, BY A TESTING AGENCY ACCEPTABLE TO AUTHORITIES HAVING JURISDICTION, AND MARKED FOR INTENDED USE.
B. UNITS SHALL BE DESIGNED TO OPERATE WITH HCFC-FREE REFRIGERANTS.

1.2 WARRANTY

A. ALL UNITS ARE TO BE SET UP BY A CERTIFIED TECHNICIAN.
B. SPECIAL WARRANTY: MANUFACTURER'S STANDARD FORM IN WHICH MANUFACTURER AGREES TO REPLACE COMPONENTS LISTED BELOW THAT FAIL IN MATERIALS OR WORKMANSHIP WITHIN SPECIFIED WARRANTY PERIOD.

1. WARRANTY PERIOD FOR COMPRESSORS: MANUFACTURER'S STANDARD, BUT NOT LESS THAN FIVE (5) YEARS FROM DATE OF SUBSTANTIAL COMPLETION.
2. WARRANTY PERIOD FOR HEAT EXCHANGERS: MANUFACTURER'S STANDARD, BUT NOT LESS THAN FIVE (5) YEARS FROM DATE OF SUBSTANTIAL COMPLETION.

1.3 MANUFACTURERS

A. MANUFACTURERS: SUBJECT TO COMPLIANCE WITH REQUIREMENTS, PROVIDE PRODUCTS BY ONE OF THE FOLLOWING:
1. AAON
2. TRANE
3. CARRIER
4. YORK
5. GOODMAN
6. LENNOX

2.1 CABINET

A. CONSTRUCTION: SINGLE WALL.
B. EXTERIOR CASING: GALVANIZED STEEL WITH BAKED-ENAMEL PAINT FINISH WITH LIFTING LUGS AND KNOCKOUTS FOR ELECTRICAL AND PIPING CONNECTIONS.

2.2 INTERIOR CASING - GALVANIZED STEEL

A. BASE RAILS: GALVANIZED-STEEL RAILS FOR MOUNTING ON ROOF CURB.
B. SERVICE DOORS: HINGED ACCESS DOORS WITH NEOPRENE GASKETS.
C. INTERNAL INSULATION: FIBROUS-GLASS DUCT LINING COMPLYING WITH ASTM C 1071, TYPE II.

1. THICKNESS: 1 INCH (25 MM).
2. INSULATION ADHESIVE: COMPLY WITH ASTM C 916, TYPE I.
3. MECHANICAL FASTENERS: GALVANIZED STEEL, SUITABLE FOR ADHESIVE ATTACHMENT, MECHANICAL ATTACHMENT, OR WELDING ATTACHMENT TO CASING WITHOUT DAMAGING LINER AND WITHOUT CAUSING AIR LEAKAGE WHEN APPLIED AS RECOMMENDED BY MANUFACTURER.

D. CONDENSATE DRAIN PANS: FORMED SECTIONS OF STAINLESS-STEEL SHEET DESIGNED FOR SELF-DRAINAGE. FABRICATE PANS WITH SLOPES TO PRECLUDE BUILDUP OF MICROBIAL SLIME. PROVIDE FLOAT SWITCH.
E. ROOF CURB: FULL-PERIMETER CURB OF SHEET METAL, MINIMUM 14 INCHES HIGH, WITH WOOD NAILER, NEOPRENE SEALING STRIP, AND WELDED Z-BAR FLASHING.

2.3 SUPPLY-AIR FAN

A. FAN: FORWARD-CURVED CENTRIFUGAL; STATICALLY AND DYNAMICALLY BALANCED, GALVANIZED STEEL, MOUNTED ON SOLID-STEEL SHAFT WITH SELF-ALIGNING, PERMANENTLY LUBRICATED BALL BEARINGS.
B. MOTOR: TOTALLY ENCLOSED-SPEED MOTOR.
C. DRIVE: V-BELT DRIVE WITH MATCHING FAN PULLEY AND ADJUSTABLE MOTOR SHEAVES AND BELT ASSEMBLY WITH MINIMUM 1.4 SERVICE FACTOR.
D. MOUNTING: FAN WHEEL, MOTOR, AND DRIVES SHALL BE MOUNTED IN FAN CASING WITH SPRING ISOLATORS.

2.4 REFRIGERATION SYSTEM

A. FABRICATE AND LABEL REFRIGERATION SYSTEM TO COMPLY WITH ASHRAE 15, "SAFETY CODE FOR MECHANICAL REFRIGERATION."
B. COMPRESSORS: RECIPROCATING OR SCROLL COMPRESSORS WITH INTEGRAL VIBRATION ISOLATORS, INTERNAL OVERCURRENT AND OVERTEMPERATURE PROTECTION, INTERNAL PRESSURE RELIEF.
C. EER AND COP: 13 EER AND 11.8 COP VALUES AS DEFINED BY ASHRAE/IESNA 90.1, "ENERGY EFFICIENT DESIGN OF NEW BUILDINGS EXCEPT LOW-RISE RESIDENTIAL BUILDINGS."
D. REFRIGERANT: R-410A ON ALL NEW SYSTEMS.
E. REFRIGERATION SYSTEM SPECIALTIES: EXPANSION VALVE WITH REPLACEABLE THERMOSTATIC ELEMENT

1. REFRIGERANT DRYER.
2. HIGH-PRESSURE SWITCH.
3. LOW-PRESSURE SWITCH.
4. THERMOSTAT FOR COIL FREEZE-UP PROTECTION DURING LOW AMBIENT TEMPERATURE OPERATION OR LOSS OF AIR.
5. BRASS SERVICE VALVES INSTALLED IN DISCHARGE AND LIQUID LINES.
6. OPERATING CHARGE OF REFRIGERANT.

2.5 CAPACITY CONTROL

A. HOT-GAS BYPASS REFRIGERANT CONTROL FOR CAPACITY CONTROL WITH CONTINUOUS DEHUMIDIFICATION TO BE PROVIDED.

2.6 REFRIGERANT COILS

A. EVAPORATOR AND CONDENSER COILS SHALL BE DESIGNED, TESTED, FABRICATED, AND RATED ACCORDING TO ARI 410 AND ASHRAE 33. COILS SHALL BE LEAK TESTED UNDER WATER WITH AIR AT 315 PSIG (2170 KPA).

1. CAPACITY REDUCTION: CIRCUIT COILS FOR FACE CONTROL.
2. TUBES: COPPER.
3. FINS: ALUMINUM
4. FIN AND TUBE JOINT: MECHANICAL BOND.
5. SUCTION AND DISTRIBUTOR: SEAMLESS COPPER TUBE WITH BRAZED JOINTS.
6. COATING: PHENOLIC EPOXY CORROSION-PROTECTION COATING ON BOTH COILS.
7. SOURCE QUALITY CONTROL: TEST TO 450 PSIG (3105 KPA), AND TO 300 PSIG (2070 KPA) UNDERWATER.

B. CONDENSER FAN: PROPELLER TYPE, DIRECTLY DRIVEN BY MOTOR.
C. SAFETY CONTROLS:

1. COMPRESSOR MOTOR AND OUTSIDE-COIL FAN MOTOR LOW AMBIENT LOCKOUT.
2. OVERCURRENT PROTECTION FOR COMPRESSOR MOTOR AND OUTSIDE-COIL FAN MOTORS.

2.7 FILTERS

A. COMPLY WITH NFPA 90A.
B. DISPOSABLE PLEATED FILTERS: 2-INCH- (50-MM-) THICK, FACTORY-FABRICATED, FLAT-PANEL-TYPE, DISPOSABLE AIR FILTERS WITH HOLDING FRAMES.
C. FILTER MEDIA TO BE INTERLACED GLASS FIBERS SPRAYED WITH NONFLAMMABLE ADHESIVE.
D. FILTER FRAMES TO BE GALVANIZED STEEL.

2.8 CONTROLS

A. ALL CONTROLS ARE TO BE SET UP BY A CERTIFIED TECHNICIAN.
B. FACTORY-WIRE CONNECTION FOR CONTROLS' POWER SUPPLY.
C. CONTROL DEVICES, INCLUDING SENSORS, TRANSMITTERS, RELAYS, SWITCHES, THERMOSTATS, HUMIDISTATS, DETECTORS, OPERATORS, ACTUATORS, AND VALVES, SHALL BE MANUFACTURER'S STANDARD ITEMS TO ACCOMPLISH INDICATED CONTROL FUNCTIONS.
D. UNIT CONTROLS: SOLID-STATE CONTROL BOARD AND COMPONENTS WITH FIELD-ADJUSTABLE CONTROL PARAMETERS.
E. SUPPLY-FAN CONTROL: UNITS SHALL BE ELECTRICALLY INTERLOCKED WITH CORRESPONDING EXHAUST FANS, TO OPERATE CONTINUOUSLY WHEN EXHAUST FANS ARE RUNNING. TIME CLOCK SHALL SWITCH OPERATION FROM OCCUPIED TO UNOCCUPIED. NIGHT SETBACK THERMOSTAT SHALL CYCLE FAN DURING UNOCCUPIED PERIODS TO MAINTAIN SPACE TEMPERATURE.

1. TIMER: SEVEN-DAY ELECTRONIC CLOCK.

E. ELECTRICALLY INTERLOCK KITCHEN HOOD FIRE-EXTINGUISHING SYSTEM TO DE-ENERGIZE REPLACEMENT-AIR UNIT WHEN FIRE-EXTINGUISHING SYSTEM DISCHARGES.
F. MINIMUM REFRIGERATION SYSTEM CONTROLS SHALL CONSIST OF A WALL-MOUNTING, RELATIVE-HUMIDITY AND TEMPERATURE SENSOR THAT ENERGIZES DEHUMIDIFIER OPERATION WHEN RELATIVE HUMIDITY IS MORE THAN 60 PERCENT.

PIPING:

CONDENSATE DRAINS:

CONDENSATE PIPE TO BE TYPE L OR PVC. ROUTE TO DRYWELL OR AS INDICATED ON PLANS. COORDINATE WITH PLUMBER TO PROVIDE HUB DRAIN(S) IN MECHANICAL ROOM AND DRYWELL(S). HVAC CONTRACTOR TO PROVIDE P-TRAP AT UNIT SIZED FOR 2" GREATER THAN UNIT STATIC PRESSURE. PROVIDE CLEANOUT AT UNIT FOR SUSPENDED HORIZONTAL AIR HANDLERS. INSULATE CONDENSATE PIPE WITH 1/2" ARMAFLEX (OR EQUAL) INSULATION RATED FOR PLENUM APPLICATION. CONDENSATE DRAIN LINE SHALL BE NOT LESS THAN THE EQUIPMENT DRAIN LINE SIZE AND IN NO CASE LESS THAN 3/4" PIPE SIZE.

REFRIGERANT PIPING:

COVER ALL EXPOSED LIQUID LINES AND ALL SUCTION PIPING (INDOORS AND OUTDOORS), FITTINGS, VALVES, ETC., CONTINUOUS THROUGH SLEEVES, HANGERS, ETC., WITH 1/2" FR/ARMAFLEX. INSTALLATION SHALL BE CONDENSATION FREE AND INSTALLED ACCORDING TO MANUFACTURER'S RECOMMENDATIONS.

REFRIGERANT PIPING BELOW GRADE SHALL BE ROUTED THROUGH MINIMUM 4" DIAMETER PVC PIPE SLEEVES TO EACH CONDENSING UNIT. ALL UNDERGROUND REFRIGERANT PIPING SHALL BE CONTINUOUS WITH NO UNDERGROUND JOINTS ALLOWED. REFRIGERANT PIPE SIZES SHALL BE SIZED PER A/C EQUIPMENT MANUFACTURER'S RECOMMENDATION BASED ON LENGTH OF RUN BETWEEN CONDENSING UNITS AND AHU UNITS.

PIPING ROUTED ALONG BUILDING EXTERIOR WALL SHALL BE PROTECTED BY SHEET METAL HOUSING SECURELY ATTACHED TO WALL AT 8'-0" INTERVALS AND PAINTED TO MATCH BUILDING EXTERIOR.

TRAP OIL IN SUCTION LINE AT EVAPORATOR COIL. NO OTHER COIL TRAPS PERMITTED. PROVIDE SUCTION RISERS, CHECK VALVES, SOLENOID VALVES, OR OTHER DEVICES REQUIRED IN PIPING SYSTEM BY MANUFACTURER'S INSTALLATION INSTRUCTIONS.

PIPE HANGERS AND SUPPORTS:
PIPE HANGERS, WHERE NEEDED, SHALL BE GRINNEL #260 CLEVIS TYPE, 5'-0" ON CENTER, SECURELY ATTACHED TO BUILDING CONSTRUCTION. SPACE AT MIN. 5'-0" INTERVALS.

PIPE SUPPORT:
ATTACH LINES SECURELY ALONG PAD/FLOOR/EQUIPMENT/STRUCTURE TO PREVENT MOVEMENT. SUPPORT IN A MANNER THAT LINES DO NOT HANG FROM EVAPORATOR CONNECTIONS OR BLOCK ACCESS TO FILTERS, CONTROLS, ETC.

SUPPORT AT MIN. 8'-0" INTERVALS FOR VERTICAL PIPES, 5'-0" FOR SUSPENDED HORIZONTAL PIPING.

EXHAUST FANS:

FURNISH EXHAUST FANS WITH PERFORMANCE AND CAPACITIES AS LISTED ON THE DESIGN DRAWINGS.

SUSPENDED FANS SHALL BE SUPPORTED FROM A TRAPEZE TYPE HANGER WITH SPRING MOUNTED VIBRATION ISOLATORS.

ALL EXHAUST FANS SHALL COME WITH INTEGRAL BACKDRAFT DAMPER.

COORDINATE WITH ARCHITECT TO LOCATE EXHAUST FANS, EXHAUST GRILLES, WALL OR ROOF CAPS A MINIMUM DISTANCE OF 10'-0" FROM ANY OPERABLE WINDOW, DOOR OR FRESH AIR INTAKE.

AIR DISTRIBUTION EQUIPMENT:

FURNISH SUPPLY AIR GRILLES AND RETURN AIR REGISTERS WITH OPPOSED BLADE BALANCING DAMPERS AS SCHEDULED ON THE DESIGN DRAWINGS.

GRILLES, REGISTERS, AND CEILING DIFFUSERS SHALL BE FURNISHED AS SCHEDULED ON THE DESIGN DRAWINGS AND SHALL BE ALL ALUMINUM CONSTRUCTION UNLESS NOTED OTHERWISE. AIR DISTRIBUTION SHALL NOT EXCEED NC-30 NOISE CRITERIA AS DEFINED IN THE LATEST ASHRAE GUIDE.

DUCTWORK:

1. ALL DUCTWORK DIMENSIONS ARE INSIDE NET FREE AREA.
2. SEAL ALL JOINTS WITH GLASS-FAB AND MASTIC.
3. ALL DUCTWORK SHOWN PER PLAN IS TO BE SHEET METAL. FIBERGLASS DUCT BOARD IS NOT TO BE INSTALLED UNLESS SPECIFICALLY AUTHORIZED BY THE BUILDING LANDLORD, PROJECT OWNER/AGENT AND MECHANICAL ENGINEER OF RECORD.
4. ALL EXHAUST AND OUTSIDE AIR DUCTWORK IS TO BE SHEET METAL - NO EXCEPTIONS. OUTSIDE AIR DUCTWORK IS TO BE EXTERNALLY INSULATED, REFER TO SHEET METAL DUCTWORK INFORMATION BELOW.
ADJUSTABLE SPLITTERS AND DAMPERS SHALL BE SUPPLIED AND INSTALLED IN EVERY SPLIT AND BRANCH DUCT AND SHALL BE PROVIDED WITH LOCKING QUADRANTS ON EXPOSED OR IN ACCESSIBLE AREAS OF THE DUCT FOR EASE OF OPERATION. ACCESS PANELS OR YOUNG REGULATORS SHALL BE PROVIDED WHERE DAMPERS ARE INSTALLED ABOVE HARD CEILINGS OR IN SOFFITS EVEN IF NOT STATED ON PLANS.ELBOWS OR CHANGES IN DUCT DIRECTION GREATER THAN 45 DEGREES SHALL BE FITTED WITH AIR TURNS CONSISTING OF CURVED AIRFOIL BLADES OR VANES WHICH WILL PERMIT THE AIR TO MAKE ABRUPT TURNS WITHOUT APPRECIABLE TURBULENCE.
5. ELBOWS OR CHANGES IN DUCT DIRECTION GREATER THAN 45 DEGREES SHALL BE FITTED WITH AIR TURNS CONSISTING OF CURVED AIRFOIL BLADES OR VANES WHICH WILL PERMIT THE AIR TO MAKE ABRUPT TURNS WITHOUT APPRECIABLE TURBULENCE. LONG RADIUS TURNS ARE AN ACCEPTABLE SUBSTITUTE IF SPACE PERMITS.
6. WHEN DUCT BOARD IS USED: 26 GAUGE Y-FITTINGS WILL NOT BE AN APPROVED SUBSTITUTE FOR TRIANGULAR BOXES.

- SHEET METAL DUCTWORK: SHALL BE CONSTRUCTED PER THE APPROPRIATE SMACNA DESIGN STANDARDS, MEETING THE MINIMUM GAUGE SHEET METAL THICKNESS SPECIFIED. INSULATE INTERNALLY OR EXTERNALLY WITH FIBERGLASS INSULATION TO ACHIEVE A MINIMUM R-VALUE OF 7.0 UNLESS INSTALLED IN A MECHANICALLY COOLED SPACE OR BETWEEN COOLED FLOORS IN A CAVITY WHOSE EXTERIOR WALLS ARE INSULATED, IN WHICH CASE THE R-VALUE MAY BE 4.2.

- FIBERGLASS DUCTWORK: SHALL BE CONSTRUCTED OF FIBERGLASS FIBERBOARD DUCTWORK TO BE A MINIMUM OF 1" THICK. FIBERGLASS DUCTWORK SHALL BE LINED WITH ANTI MICROBIAL INSULATION EQUAL TO JOHNS-MANVILLE SUPERDUCT. INSULATE FIBERGLASS SUPPLY AND RETURN DUCTS TO A MINIMUM R-VALUE OF 6.0 UNLESS INSTALLED IN A MECHANICALLY COOLED SPACE OR BETWEEN COOLED FLOORS IN A CAVITY WHOSE EXTERIOR WALLS ARE INSULATED, IN WHICH CASE THE R-VALUE MAY BE 4.2.

- FLEXIBLE DUCTWORK: SHALL BE SPIRAL FORMED OUT OF 3003 BRIGHT REFLECTIVE FINISHED ALUMINUM ALLOY AND MECHANICALLY LOCKED. FLEXIBLE DUCTS TO A MINIMUM R-VALUE OF 6.0 (R=8 FOR RESIDENTIAL) UNLESS INSTALLED IN A MECHANICALLY COOLED SPACE OR BETWEEN COOLED FLOORS IN A CAVITY WHOSE EXTERIOR WALLS ARE INSULATED, IN WHICH CASE THE R-VALUE MAY BE 4.2 (R=6 FOR RESIDENTIAL). IT SHALL BE UL LISTED UNDER CLASS 1 AIR DUCTS AND CLASS 1 FORM-A ISSUE NO.566,577 FLEXIBLE "AIR DUCT" AND MEET ALL REQUIREMENTS OF UL 181 AND COMPLY WITH NFPA 90A AND NFPA 90B.

- ROUND SPIRAL DUCTWORK: SHALL BE CONSTRUCTED PER THE APPROPRIATE SMACNA DESIGN STANDARDS, MEETING THE MINIMUM GAUGE SHEET METAL THICKNESS SPECIFIED AND SHALL BE A MINIMUM 1" DOUBLE WALL INTERNALLY INSULATED. NON INSULATED SPIRAL DUCTWORK WILL NOT BE ACCEPTED AS A SUBSTITUTION.

VIBRATION ISOLATION:

ALL BLOWER UNITS AND VIBRATING TYPE EQUIPMENT SHALL BE PROPERLY FITTED WITH MASON INDUSTRIES VIBRATION ISOLATION EQUIPMENT SIZED IN ACCORDANCE WITH EQUIPMENT WEIGHT AND DUTY.

PROVIDE FLEXIBLE CONNECTORS AT ALL SUPPLY AND RETURN CONNECTIONS TO AIR HANDLING EQUIPMENT CONSISTING OF HEAVY CANVAS OR NEOPRENE FABRIC WITH AIRTIGHT SEAMS AND CONNECTIONS TO THE EQUIPMENT.

AIR FILTERS:

FILTERS SHALL BE 1" FIBERGLASS MEDIA THROW AWAY TYPE IN A RIGID FRAME WITH A SUPPORTING MAZE ACROSS BOTH ENTERING AND LEAVING SURFACES. SUPPLY ONE COMPLETE SET OF FILTERS AFTER OWNER'S FINAL ACCEPTANCE. FARR 30/30 OR EQUAL.

CONDENSING UNIT INSTALLATION:

PROVIDE CONCRETE PADS FOR GRADE MOUNTED CONDENSING UNITS. PADS SHALL BE A MINIMUM OF 4" THICK, 3,000 PSI CONCRETE, AND SHALL BE 4" LARGER ON EACH SIDE THAN THE FOOTPRINT OF THE CONDENSING UNIT. VERIFY UNIT DIMENSIONS WITH APPROVED SHOP DRAWINGS PRIOR TO FABRICATION OF PADS.

SUSPENDED UNITS SHALL BE SUPPORTED IN APPROVED MANNER AND IN ACCORDANCE WITH AIR HANDLING UNIT SUPPORT DETAIL. PROVIDE AUXILIARY OVERFLOW DRAIN PAN WITH FLOAT SWITCH WHERE REQUIRED.

ALL AIR HANDLING UNITS AND CONDENSING UNITS SHALL BE INSTALLED WITH MANUFACTURER REQUIRED MINIMUM MAINTENANCE CLEARANCES. PROVIDE MAN SIZED ACCESS PANEL WHERE REQUIRED.

FIRE / SMOKE/ RADIATION DAMPERS:

FIRE DAMPERS SHALL BE TYPE "B" CURTAIN TYPE, SUITABLE FOR EITHER VERTICAL OR HORIZONTAL INSTALLATION WITH 20 GAUGE STEEL CHANNEL FRAMES, 24 GAUGE STEEL BLADES, AND 18 GAUGE STEEL ENCLOSURE WITH DUCT COLLARS. ALL PARTS GALVANIZED MILL FINISH.

FIRE DAMPERS SHALL BE EQUAL TO RUSKIN TYPE 1BD2 FOR WALLS UP TO 2 HOUR.

INSTALL IN ACCORDANCE WITH NFPA-90A, TESTED IN ACCORDANCE WITH UL SAFETY STANDARD 555, 1-1/2 HOUR AND 4 HOUR PROTECTION, AND 165'F FUSIBLE LINK.

MEMBRANE PENETRATIONS = RADIATION OR FIRE DAMPERS SHALL BE INSTALLED ON ANY DUCTWORK 6" IN DIAMETER OR LARGER PENETRATING A RATED CEILING MEMBRANE.

## NOTE

ALL OF THE SPECIFICATIONS LISTED ON THIS SHEET MAY NOT BE USED FOR THIS PROJECT.

OWNER / PROJECT:

THE CARDIOVASCULAR CENTER OF FLORIDA

A NEW MEDICAL OFFICE BUILDING

CLERMONT, FL

M6.1

Scale As indicated