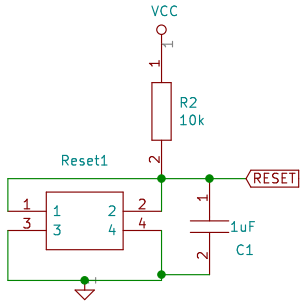

This is just a generic reset button that nearly every MCU board has.

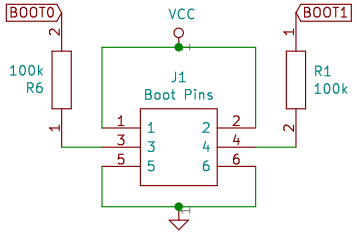

2 rows and 6 position header that controls the boot modes. Check the stm32f103 datasheet for different boot modes

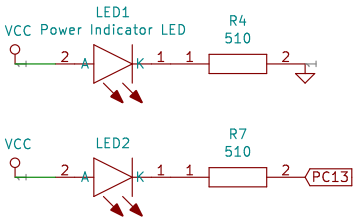

The power indicator LED will turn on when the device is powered on. The second LED is connected to GPIO pin PC13 as a onboard LED.

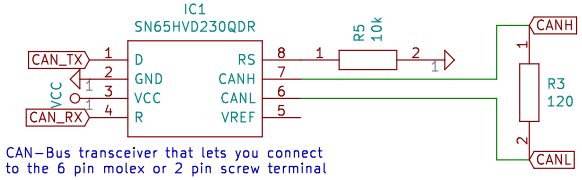

CAN-Bus transceiver that lets you connect to the 6 pin molex or 2 pin screw terminal

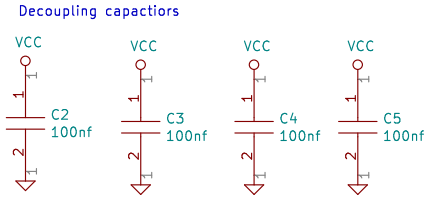

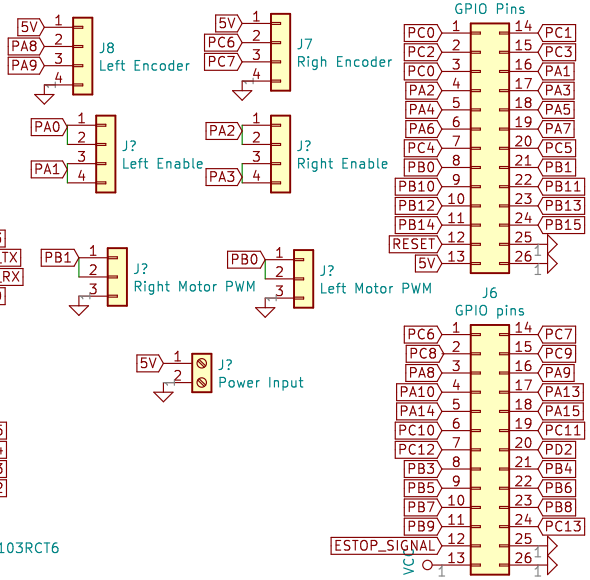

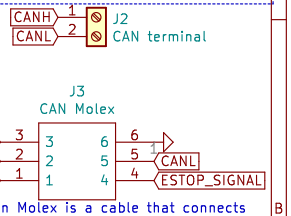

The Can Molex is a cable that connects each of our modules together using the CAN-protocol. This PCB will use the CANL/CANH, 5v, GND, and ESTOP pins.

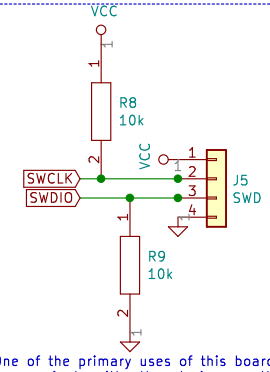

One of the primary uses of this board is to communicate with other devices on the CAN-bus. The board cannot have USB and CAN enable concurrently, so a usb port is not needed. One must use SWD to program the board using an STLink.

The 2 and 3 pins of the 32.768Khz crystal is intentionally left not connected.

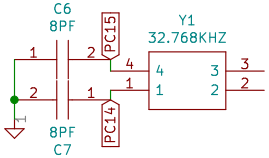

The 32.768Khz and 8Mhz crystal components that drive internal clocks.

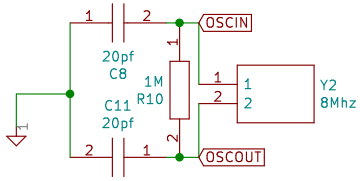

3.3 V regulator and decoupling and smoothing capacitors.

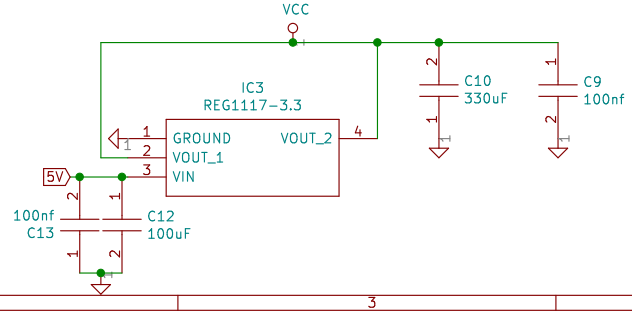

Sheet: /
File: stm32f103rct6.sch

Title:

Size: A4	Date:	**Rev:**
KiCad E.D.A. kicad (5.1.5)-3		Id: 1/1