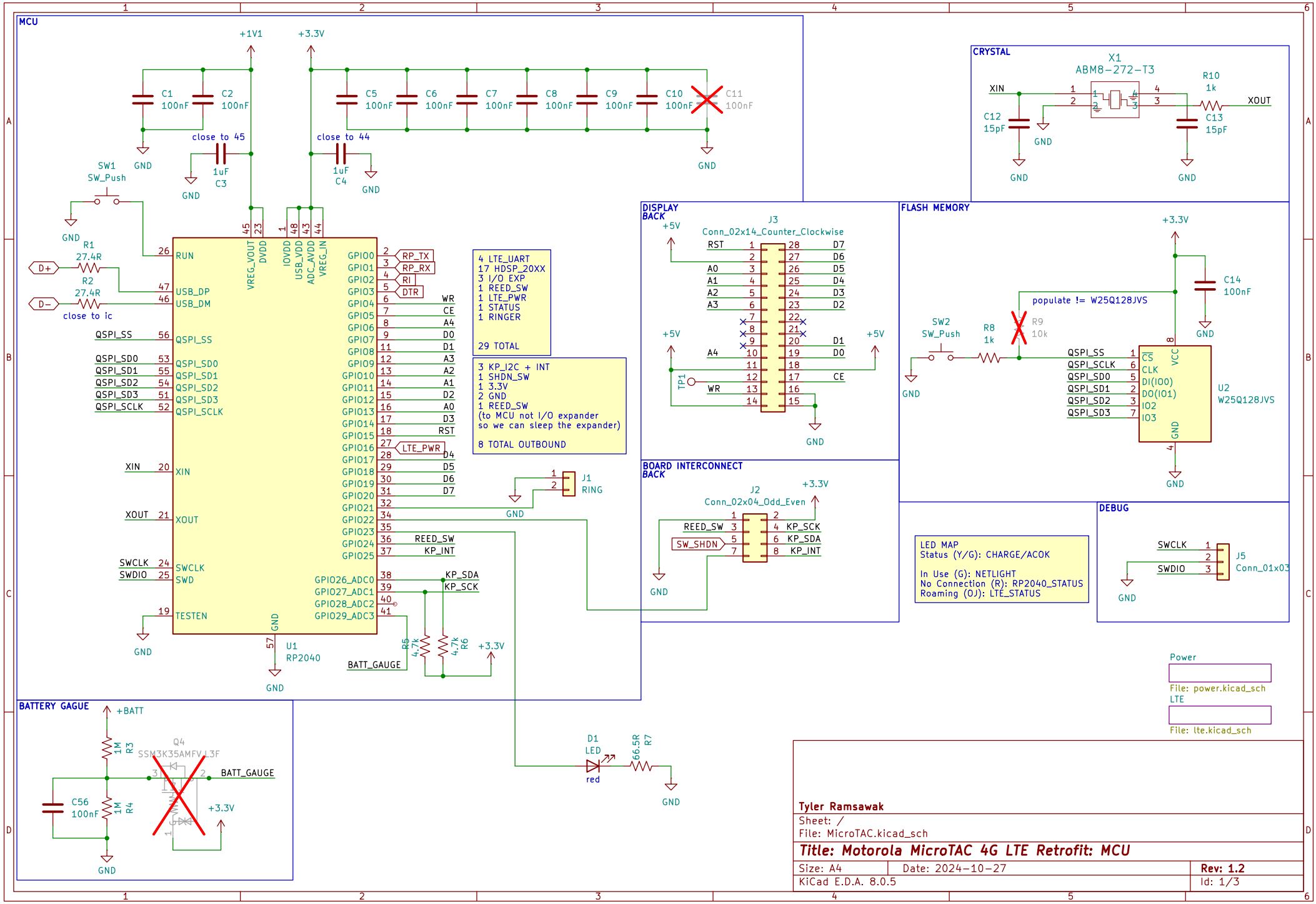
MCU
+1V1
+3.3V
C1 100nF
C2 100nF
C5 100nF
C6 100nF
C7 100nF
C8 100nF
C9 100nF
C10 100nF
C11 100nF
close to 45
1uF C3
close to 44
1uF C4
GND
SW1 SW_Push
R1 27.4R
R2 27.4R
D+
D-
close to ic
RUN
USB_DP
USB_DM
QSPI_SS
QSPI_SD0
QSPI_SD1
QSPI_SD2
QSPI_SD3
QSPI_SCLK
XIN
XOUT
SWCLK
SWD
TESTEN
VREG_VOUT
DVDD
IOVDD
USB_VDD
ADC_AVDD
VREG_IN
GPIO0 RP_TX
GPIO1 RP_RX
GPIO2 RI
GPIO3 DTR
GPIO4 WR
GPIO5 CE
GPIO6 A4
GPIO7 D0
GPIO8 D1
GPIO9 A3
GPIO10 A2
GPIO11 A1
GPIO12 D2
GPIO13 A0
GPIO14 D3
GPIO15 RST
GPIO16 LTE_PWR
GPIO17 D4
GPIO18 D5
GPIO19 D6
GPIO20 D7
GPIO21
GPIO22
GPIO23
GPIO24 REED_SW
GPIO25 KP_INT
GPIO26_ADC0 KP_SDA
GPIO27_ADC1 KP_SCK
GPIO28_ADC2
GPIO29_ADC3
U1 RP2040
BATT_GAUGE
R5 4.7k
R6 4.7k
4 LTE_UART
17 HDSP_20XX
3 I/O EXP
1 REED_SW
1 LTE_PWR
1 STATUS
1 RINGER
29 TOTAL
3 KP_I2C + INT
1 SHDN_SW
1 3.3V
2 GND
1 REED_SW
(to MCU not I/O expander
so we can sleep the expander)
8 TOTAL OUTBOUND
J1 RING
DISPLAY BACK
J3
Conn_02x14_Counter_Clockwise
RST
A0
A1
A2
A3
A4
WR
D7
D6
D5
D4
D3
D2
D1
D0
CE
TP1
BOARD INTERCONNECT BACK
J2
Conn_02x04_Odd_Even
REED_SW
SW_SHDN
KP_SCK
KP_SDA
KP_INT
CRYSTAL
X1
ABM8-272-T3
XIN
XOUT
R10 1k
C12 15pF
C13 15pF
FLASH MEMORY
C14 100nF
populate != W25Q128JVS
SW2 SW_Push
R8 1k
R9 10k
QSPI_SS
QSPI_SCLK
QSPI_SD0
QSPI_SD1
QSPI_SD2
QSPI_SD3
CS
CLK
DI(IO0)
DO(IO1)
IO2
IO3
VCC
U2 W25Q128JVS
DEBUG
SWCLK
SWDIO
J5 Conn_01x03
LED MAP
Status (Y/G): CHARGE/ACOK
In Use (G): NETLIGHT
No Connection (R): RP2040_STATUS
Roaming (OJ): LTE_STATUS
BATTERY GAGUE
+BATT
R3 1M
R4 1M
C56 100nF
Q4 SSM3K35AMFV,L3F
BATT_GAUGE
D1 LED red
R7 66.5R
Power
File: power.kicad_sch
LTE
File: lte.kicad_sch
Tyler Ramsawak
Sheet: /
File: MicroTAC.kicad_sch
Title: Motorola MicroTAC 4G LTE Retrofit: MCU
Size: A4
Date: 2024-10-27
Rev: 1.2
KiCad E.D.A. 8.0.5
Id: 1/3

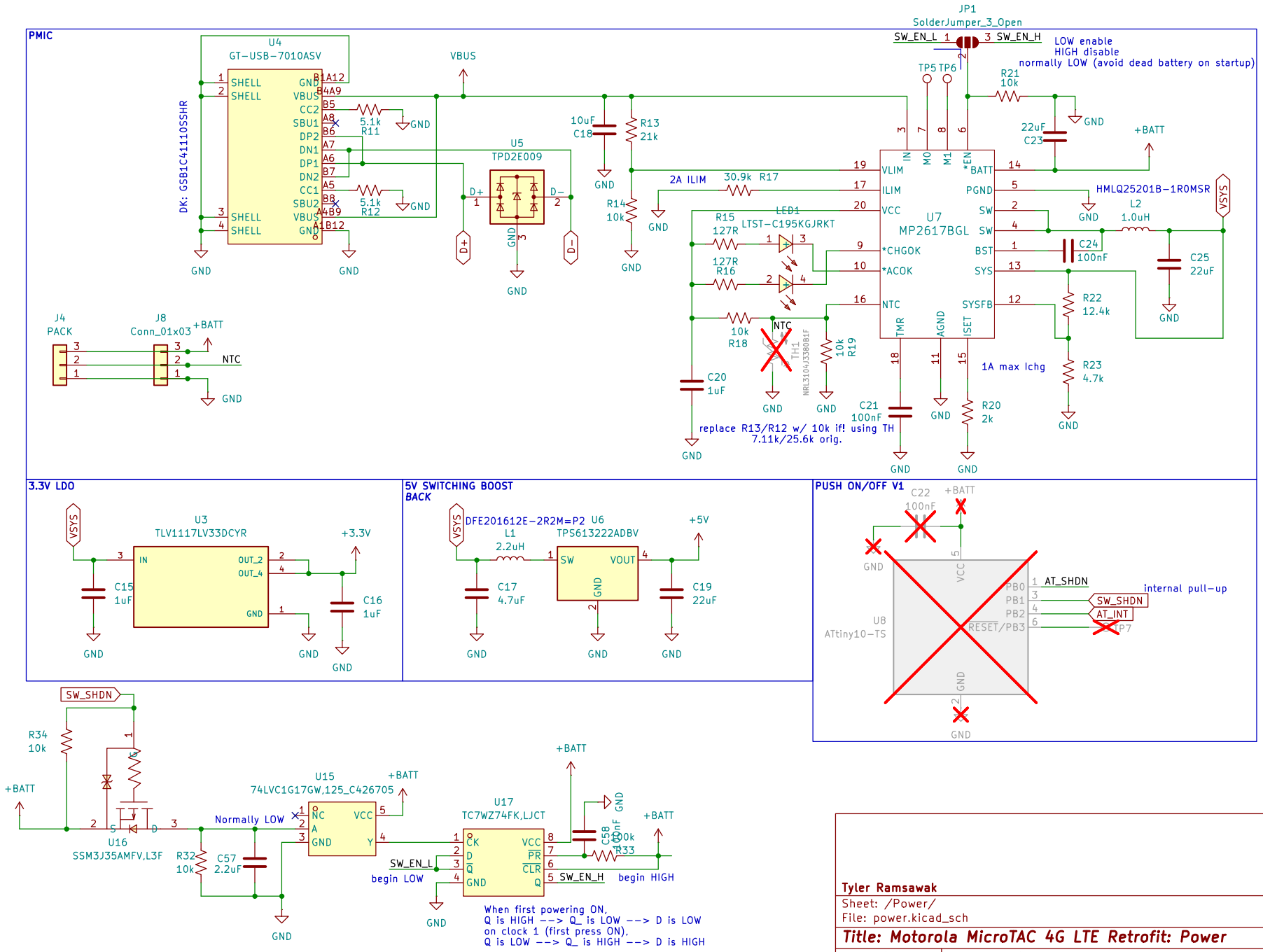

Tyler Ramsawak

Sheet: /Power/

File: power.kicad_sch

Title: Motorola MicroTAC 4G LTE Retrofit: Power

Size: A4	Date: 2024-07-12	Rev: 1
KiCad E.D.A. 8.0.5		Id: 2/3

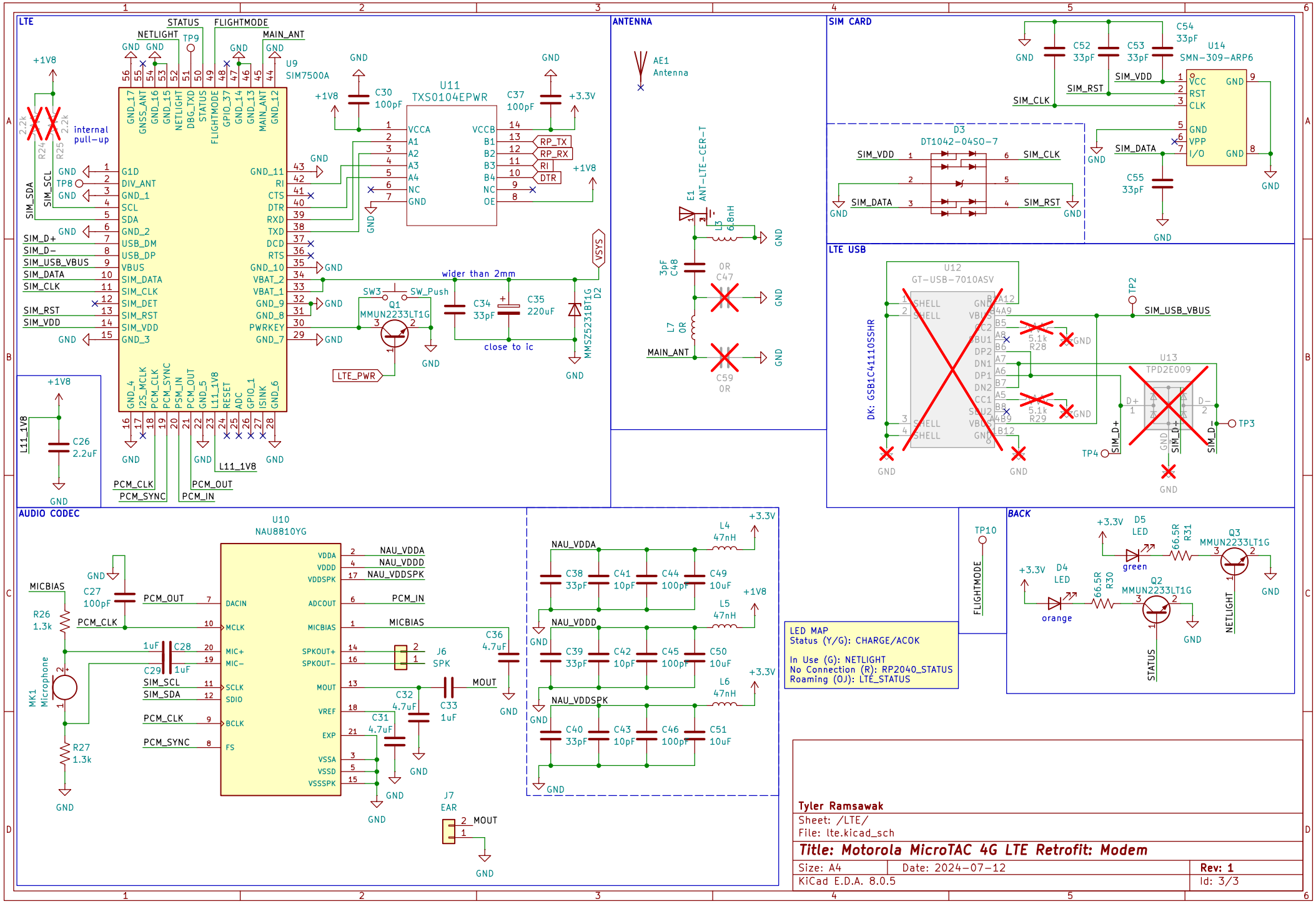
LTE
U9
SIM7500A
U11
TXS0104EPWR
ANTENNA
AE1
Antenna
SIM CARD
U14
SMN-309-ARP6
D3
DT1042-04SO-7
LTE USB
U12
GT-USB-7010ASV
U13
TPD2E009
AUDIO CODEC
U10
NAU8810YG
BACK
LED MAP
Status (Y/G): CHARGE/ACOK
In Use (G): NETLIGHT
No Connection (R): RP2040_STATUS
Roaming (OJ): LTE_STATUS
Tyler Ramsawak
Sheet: /LTE/
File: lte.kicad_sch
Title: Motorola MicroTAC 4G LTE Retrofit: Modem
Size: A4
Date: 2024-07-12
Rev: 1
KiCad E.D.A. 8.0.5
Id: 3/3