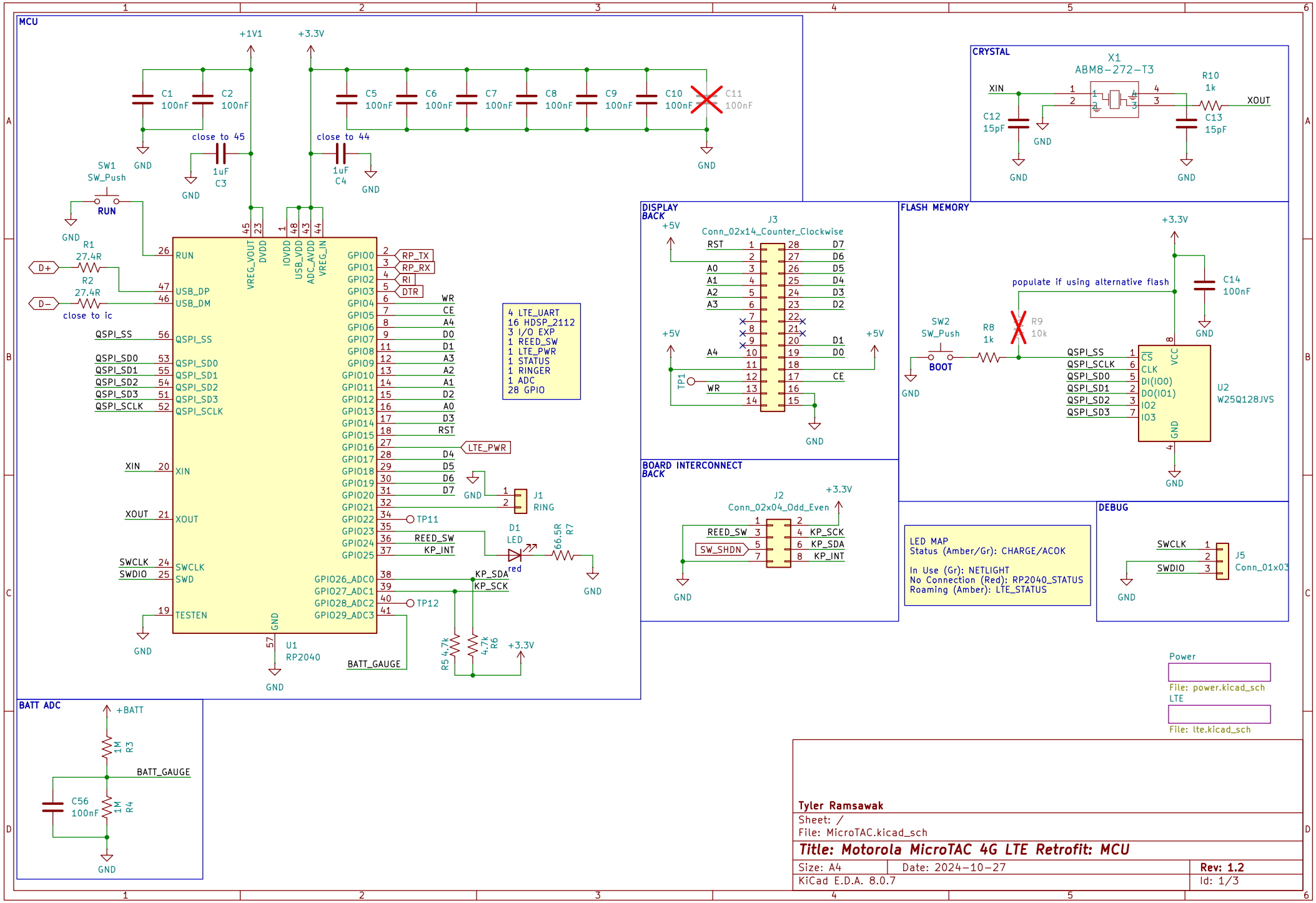
MCU
+1V1
+3.3V
C1 100nF
C2 100nF
C5 100nF
C6 100nF
C7 100nF
C8 100nF
C9 100nF
C10 100nF
C11 100nF
close to 45
close to 44
1uF C3
1uF C4
GND
SW1 SW_Push
RUN
R1 27.4R
R2 27.4R
D+
D-
close to ic
RUN
USB_DP
USB_DM
QSPI_SS
QSPI_SD0
QSPI_SD1
QSPI_SD2
QSPI_SD3
QSPI_SCLK
XIN
XOUT
SWCLK
SWD
TESTEN
VREG_VOUT
DVDD
IOVDD
USB_VDD
ADC_AVDD
VREG_IN
GPIO0 RP_TX
GPIO1 RP_RX
GPIO2 RI
GPIO3 DTR
GPIO4 WR
GPIO5 CE
GPIO6 A4
GPIO7 D0
GPIO8 D1
GPIO9 A3
GPIO10 A2
GPIO11 A1
GPIO12 D2
GPIO13 A0
GPIO14 D3
GPIO15 RST
GPIO16 LTE_PWR
GPIO17 D4
GPIO18 D5
GPIO19 D6
GPIO20 D7
GPIO21
GPIO22 TP11
GPIO23
GPIO24 REED_SW
GPIO25 KP_INT
GPIO26_ADC0 KP_SDA
GPIO27_ADC1 KP_SCK
GPIO28_ADC2 TP12
GPIO29_ADC3 BATT_GAUGE
U1 RP2040
4 LTE_UART
16 HDSP_2112
3 I/O EXP
1 REED_SW
1 LTE_PWR
1 STATUS
1 RINGER
1 ADC
28 GPIO
J1 RING
D1 LED red
R7 66.5R
R5 4.7k
R6 4.7k
BATT ADC
+BATT
R3 1M
BATT_GAUGE
C56 100nF
R4 1M
CRYSTAL
X1 ABM8-272-T3
XIN
XOUT
C12 15pF
C13 15pF
R10 1k
DISPLAY BACK
J3 Conn_02x14_Counter_Clockwise
RST
A0
A1
A2
A3
A4
WR
D7
D6
D5
D4
D3
D2
D1
D0
CE
TP1
BOARD INTERCONNECT BACK
J2 Conn_02x04_Odd_Even
REED_SW
SW_SHDN
KP_SCK
KP_SDA
KP_INT
FLASH MEMORY
C14 100nF
populate if using alternative flash
SW2 SW_Push
BOOT
R8 1k
R9 10k
QSPI_SS
QSPI_SCLK
QSPI_SD0
QSPI_SD1
QSPI_SD2
QSPI_SD3
U2 W25Q128JVS
LED MAP
Status (Amber/Gr): CHARGE/ACOK
In Use (Gr): NETLIGHT
No Connection (Red): RP2040_STATUS
Roaming (Amber): LTE_STATUS
DEBUG
SWCLK
SWDIO
J5 Conn_01x03
Power
File: power.kicad_sch
LTE
File: lte.kicad_sch
Tyler Ramsawak
Sheet: /
File: MicroTAC.kicad_sch
Title: Motorola MicroTAC 4G LTE Retrofit: MCU
Size: A4
Date: 2024-10-27
Rev: 1.2
KiCad E.D.A. 8.0.7
Id: 1/3

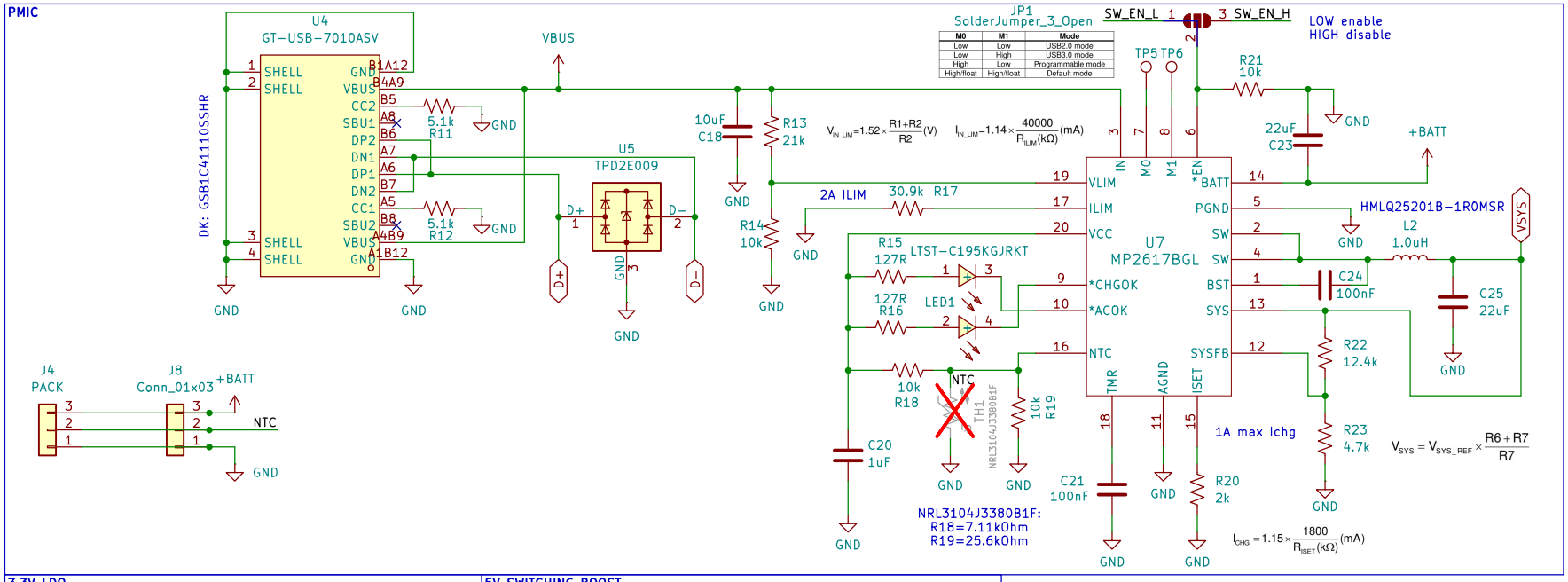

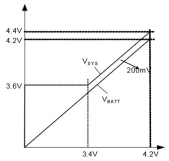

Figure 2: SYS Regulation Output

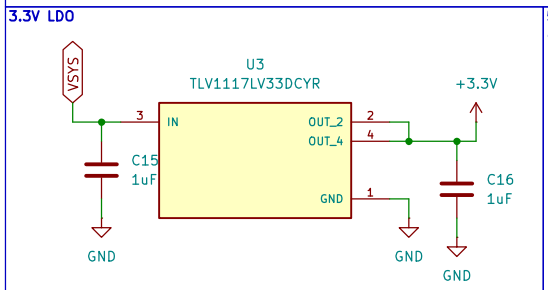

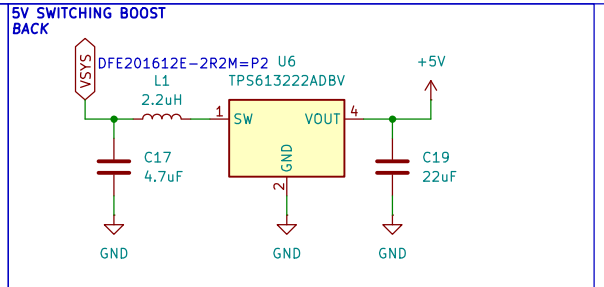

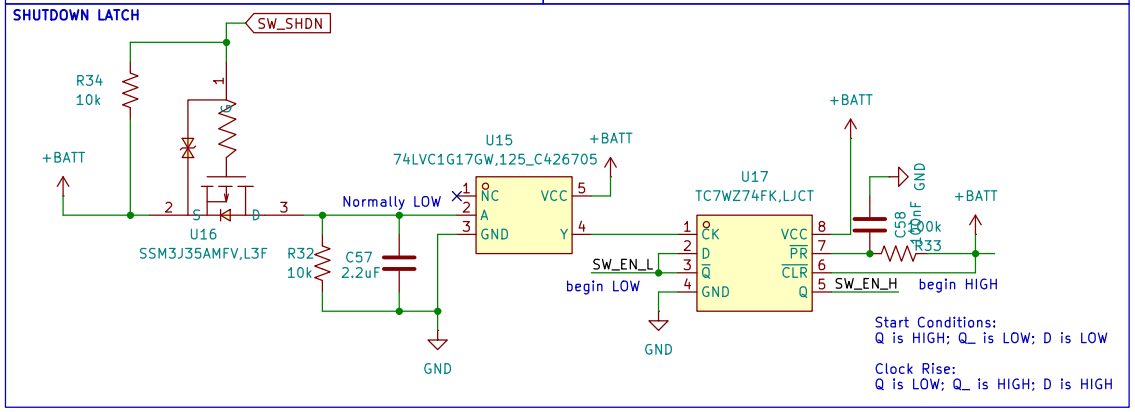

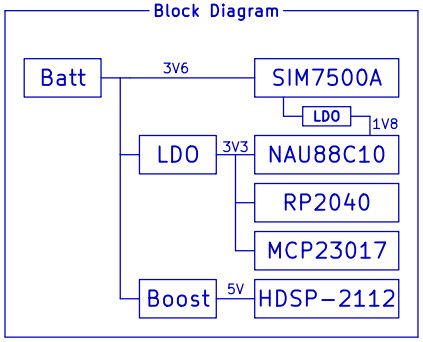

Tyler Ramsawak		
Sheet: /Power/		
File: power.kicad_sch		
Title: Motorola MicroTAC 4G LTE Retrofit: Power		
Size: A4	Date: 2024-07-12	Rev: 1
KiCad E.D.A. 8.0.7		Id: 2/3

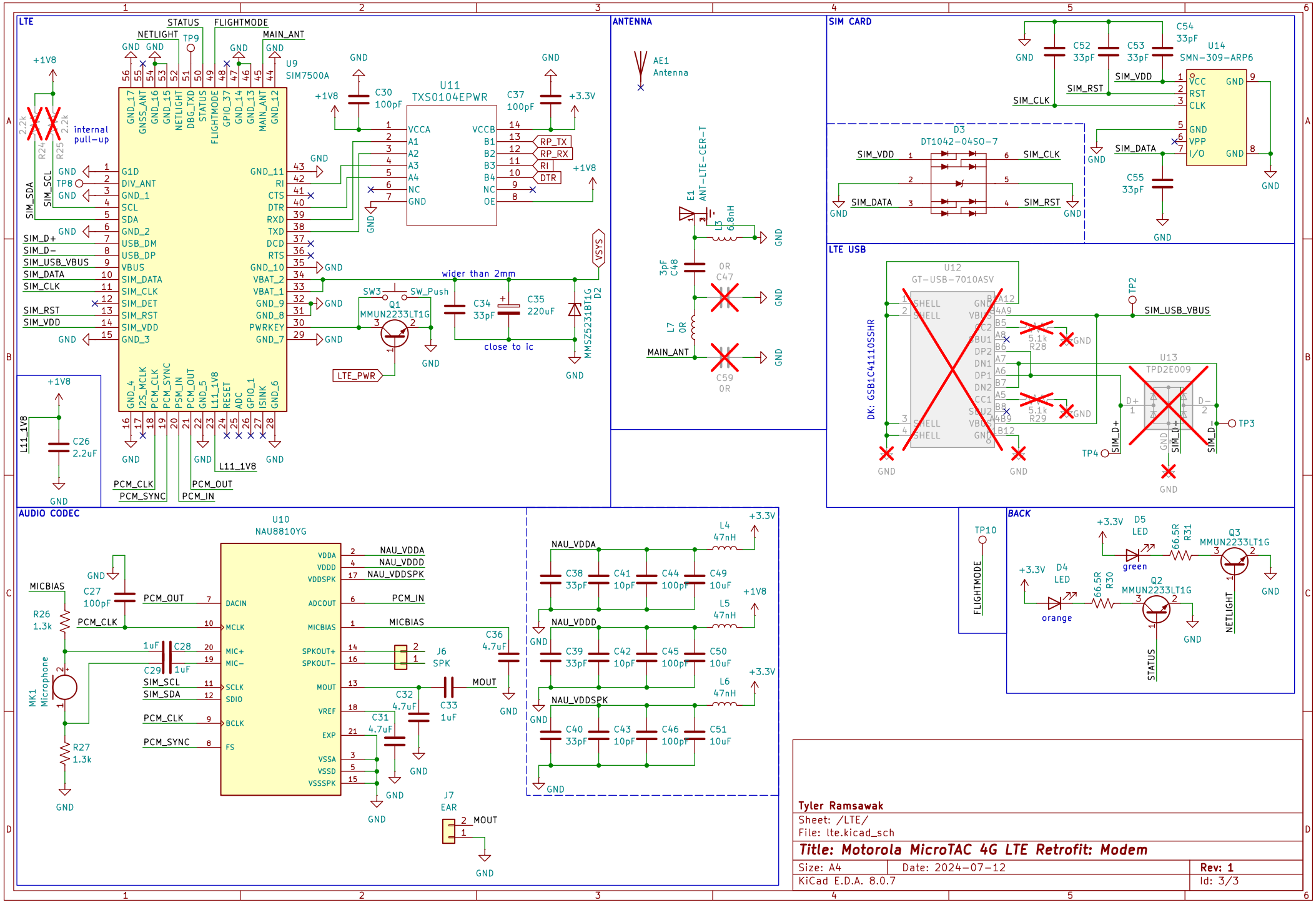
LTE
U9
SIM7500A
U11
TXS0104EPWR
internal pull-up
STATUS
FLIGHTMODE
NETLIGHT
MAIN_ANT
TP9
TP8
SIM_SDA
SIM_SCL
SIM_D+
SIM_D−
SIM_USB_VBUS
SIM_DATA
SIM_CLK
SIM_RST
SIM_VDD
LTE_PWR
VSYS
wider than 2mm
close to ic
SW3
SW_Push
Q1
MMUN2233LT1G
MMSZ5231BT1G
D2
C30
100pF
C37
100pF
C34
33pF
C35
220uF
C26
2.2uF
L11_1V8
PCM_CLK
PCM_SYNC
PCM_IN
PCM_OUT
ANTENNA
AE1
Antenna
E1
ANT-LTE-CER-T
L3
6.8nH
C48
3pF
C47
0R
L7
0R
C59
0R
SIM CARD
U14
SMN-309-ARP6
C52
33pF
C53
33pF
C54
33pF
C55
33pF
D3
DT1042-04SO-7
LTE USB
U12
GT-USB-7010ASV
DK: GSB1C41110SSHR
U13
TPD2E009
R28
5.1k
R29
5.1k
TP2
TP3
TP4
AUDIO CODEC
U10
NAU8810YG
MICBIAS
C27
100pF
R26
1.3k
R27
1.3k
MK1
Microphone
C28
1uF
C29
1uF
J6
SPK
J7
EAR
C36
4.7uF
C32
4.7uF
C31
4.7uF
C33
1uF
MOUT
NAU_VDDA
NAU_VDDD
NAU_VDDSPK
L4
47nH
L5
47nH
L6
47nH
C38
33pF
C41
10pF
C44
100pF
C49
10uF
C39
33pF
C42
10pF
C45
100pF
C50
10uF
C40
33pF
C43
10pF
C46
100pF
C51
10uF
TP10
BACK
D5
LED
green
D4
LED
orange
R30
66.5R
R31
66.5R
Q2
MMUN2233LT1G
Q3
MMUN2233LT1G
Tyler Ramsawak
Sheet: /LTE/
File: lte.kicad_sch
Title: Motorola MicroTAC 4G LTE Retrofit: Modem
Size: A4
Date: 2024-07-12
Rev: 1
KiCad E.D.A. 8.0.7
Id: 3/3