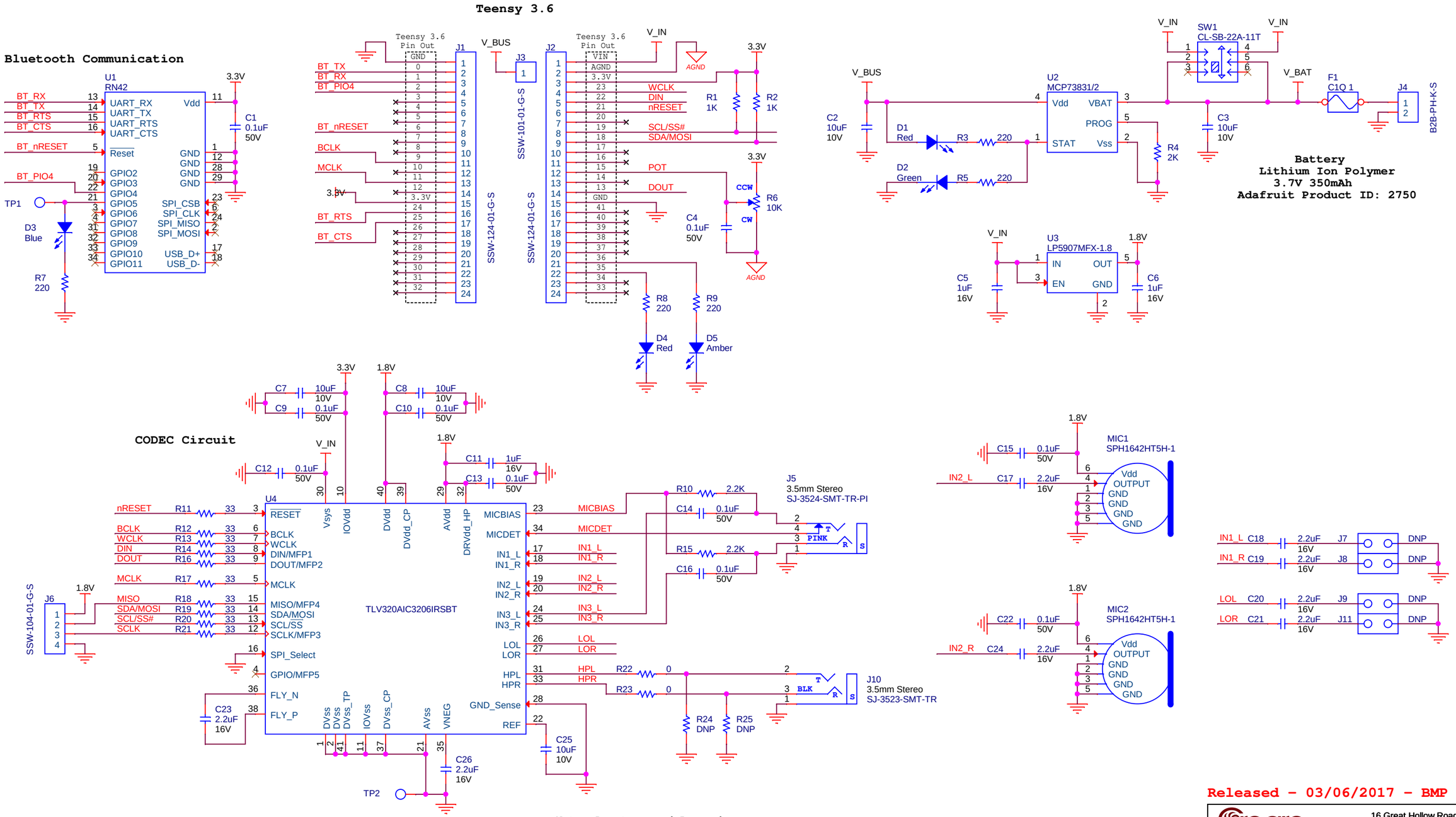

Note: L return and R speaker return should be tied at one point to GND near pin 1 of J10.

Released - 03/06/2017 - BMP

Creare	16 Great Hollow Road Hanover, NH 03755		
TITLE TYMPAN-1			
SIZE B	CAGE NO. 8A287	DOC. NO. 7146-0011	REV B
DRAWN BY BMP/TGB		ECO <ECO>	
DATE Monday, March 06, 2017		SHEET 1 OF 1	