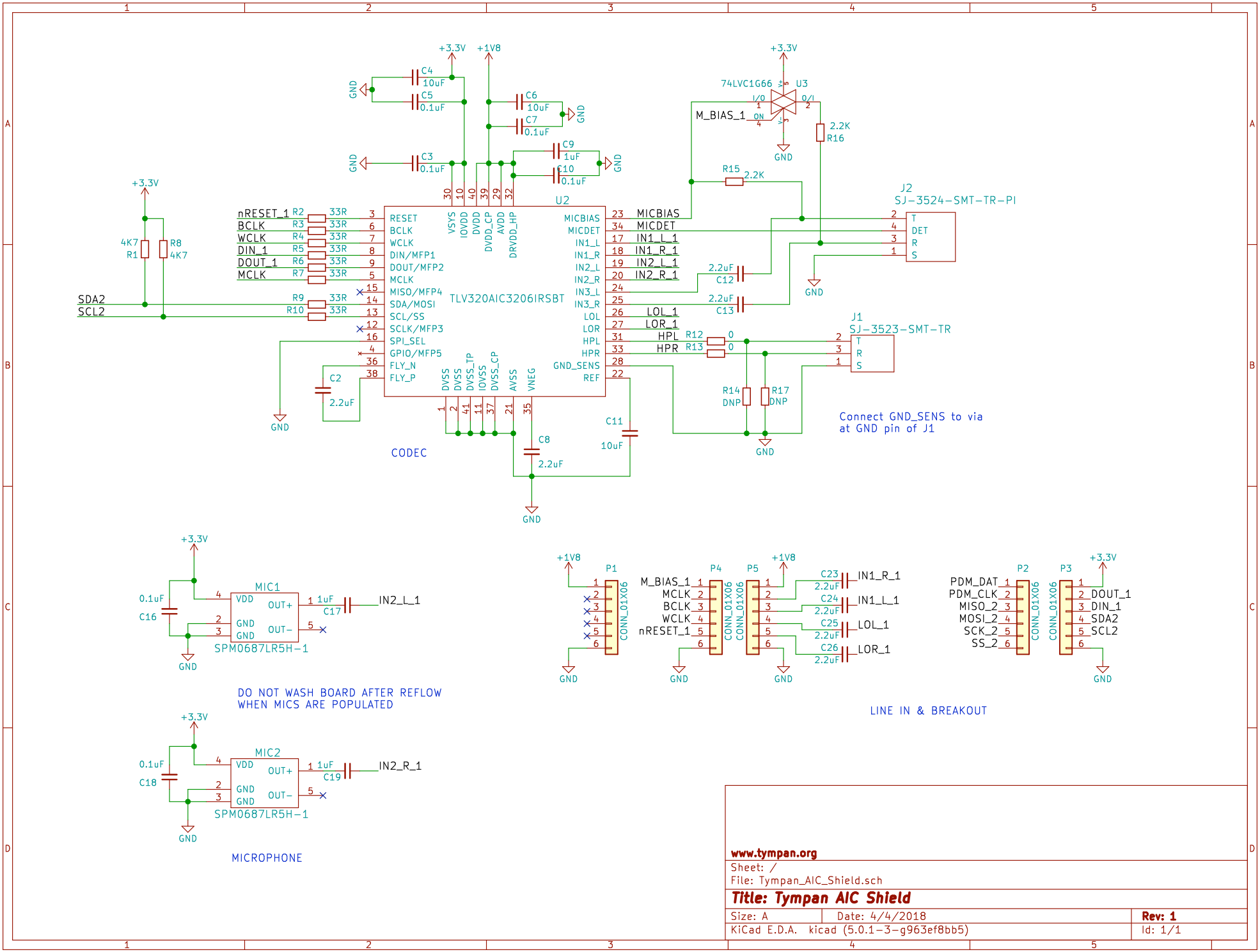

www.tympan.org

Sheet: /

File: Tympan_AIC_Shield.sch

Title: Tympan AIC Shield

Size: A	Date: 4/4/2018	Rev: 1
KiCad E.D.A. kicad (5.0.1-3-g963ef8bb5)		Id: 1/1