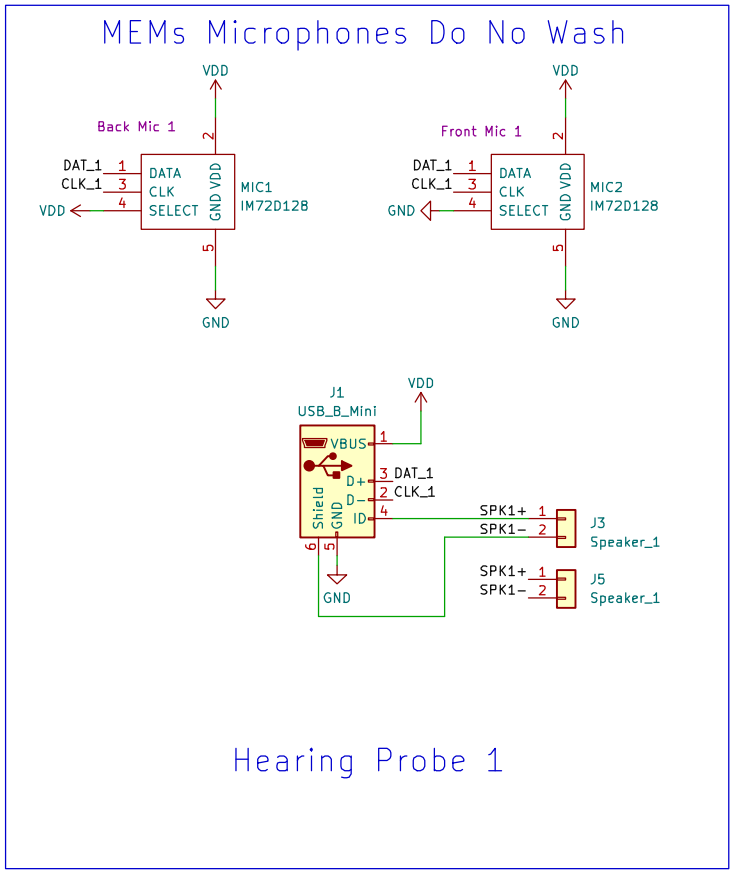

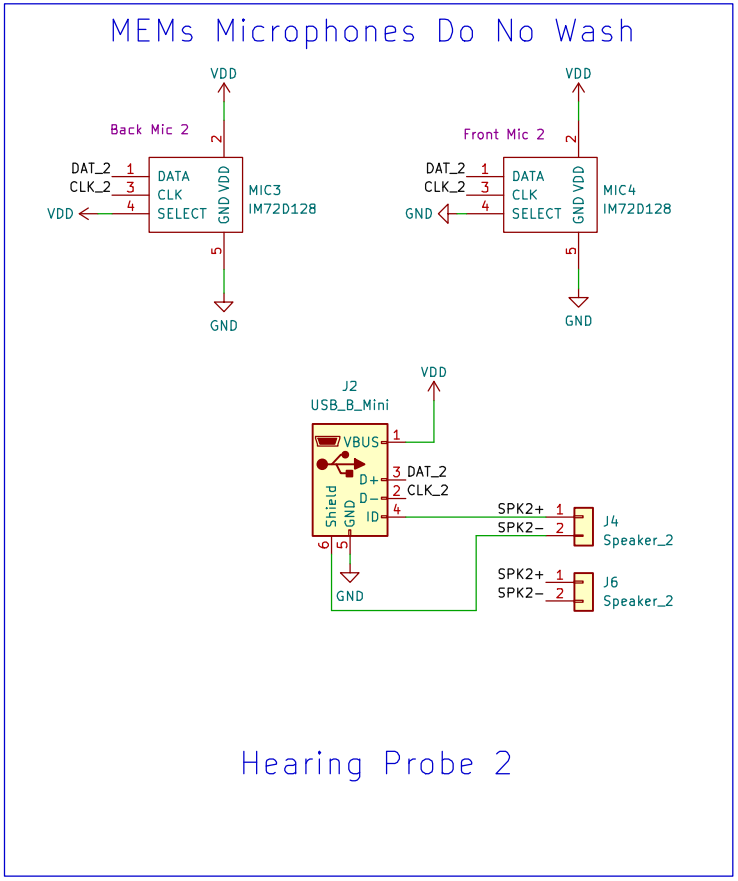

Desiged for Creare
Flywheel Lab

Sheet: /
File: HearingProbeBoard.kicad_sch

Title: Hearing Probe Board

Size: A	Date:	**Rev: v0.1**
KiCad E.D.A. 8.0.1		Id: 1/1