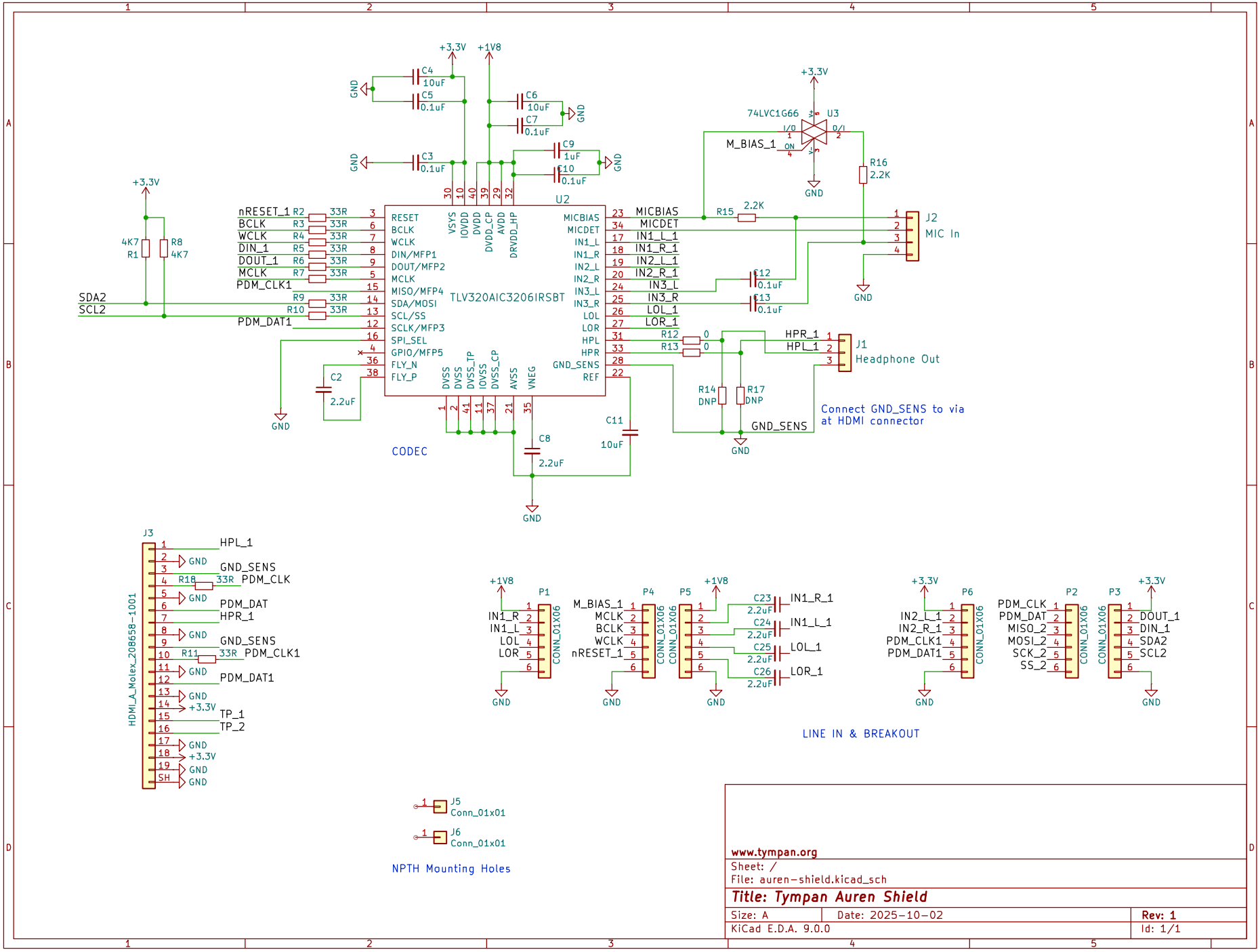
U2
TLV320AIC3206IRSBT
RESET
BCLK
WCLK
DIN/MFP1
DOUT/MFP2
MCLK
MISO/MFP4
SDA/MOSI
SCL/SS
SCLK/MFP3
SPI_SEL
GPIO/MFP5
FLY_N
FLY_P
VSYS
IOVDD
DVDD
DVDD_CP
AVDD
DRVDD_HP
MICBIAS
MICDET
IN1_L_1
IN1_R_1
IN2_L_1
IN2_R_1
IN3_L
IN3_R
LOL_1
LOR_1
HPL
HPR
GND_SENS
REF
DVSS
DVSS_TP
IOVSS
DVSS_CP
AVSS
VNEG
nRESET_1
BCLK
WCLK
DIN_1
DOUT_1
MCLK
PDM_CLK1
SDA2
SCL2
PDM_DAT1
CODEC
J2
MIC In
J1
Headphone Out
Connect GND_SENS to via at HDMI connector
74LVC1G66
U3
M_BIAS_1
J3
HDMI_A_Molex_208658-1001
HPL_1
GND_SENS
PDM_CLK
PDM_DAT
HPR_1
PDM_CLK1
PDM_DAT1
TP_1
TP_2
P1
P4
P5
P6
P2
P3
CONN_01X06
LINE IN & BREAKOUT
J5
Conn_01x01
J6
Conn_01x01
NPTH Mounting Holes
www.tympan.org
Sheet: /
File: auren-shield.kicad_sch
Title: Tympan Auren Shield
Size: A
Date: 2025-10-02
Rev: 1
KiCad E.D.A. 9.0.0
Id: 1/1