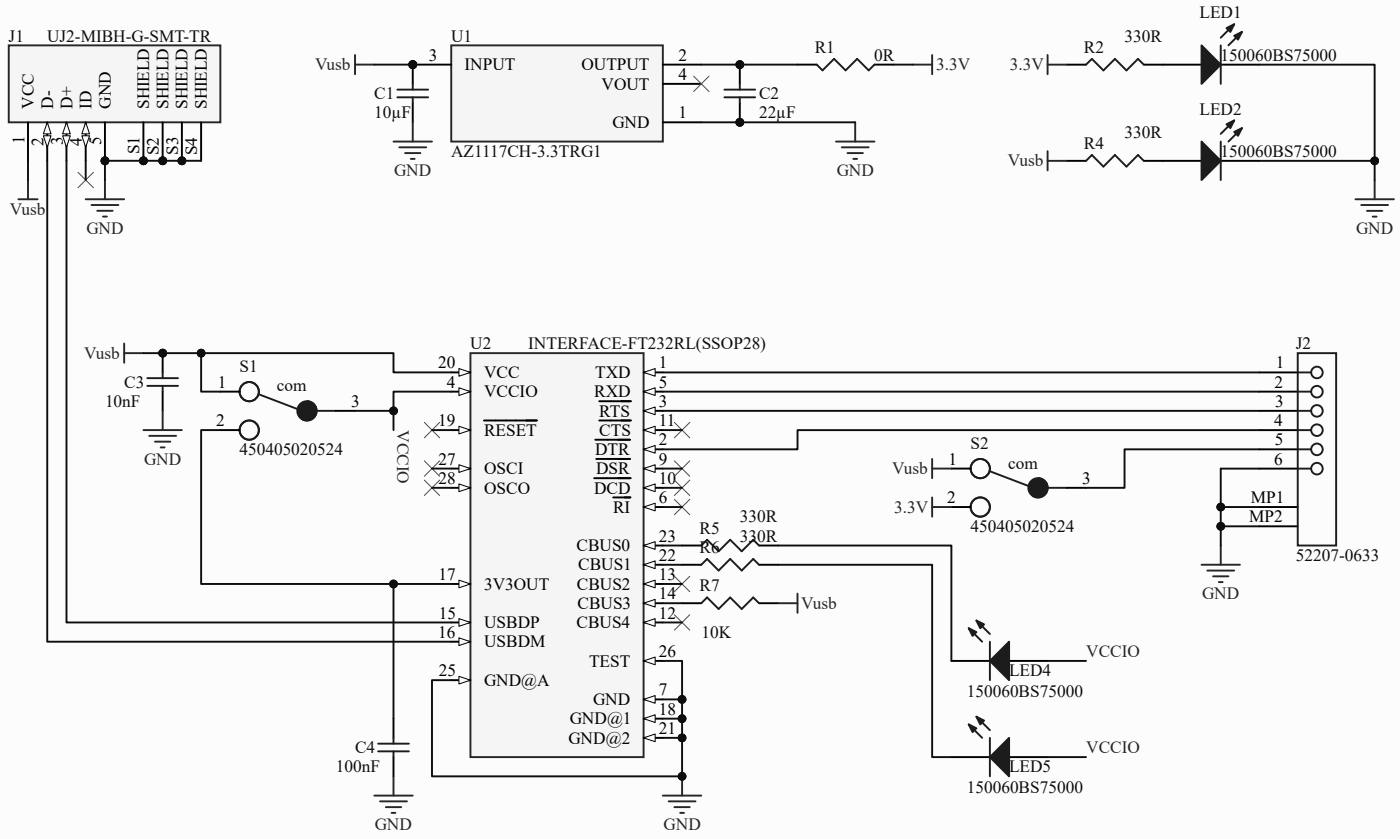

Title	DYBoard Feeder	04/2022	
Size	A4	Number 4065-V1.0.SD	Revision V1.0.0.SD
Date:	4/19/2023	Sheet of	1/1
File:	C:\Users\..\DYBoard_Feeder.SchDoc	Drawn By:	Séastien DYCKE