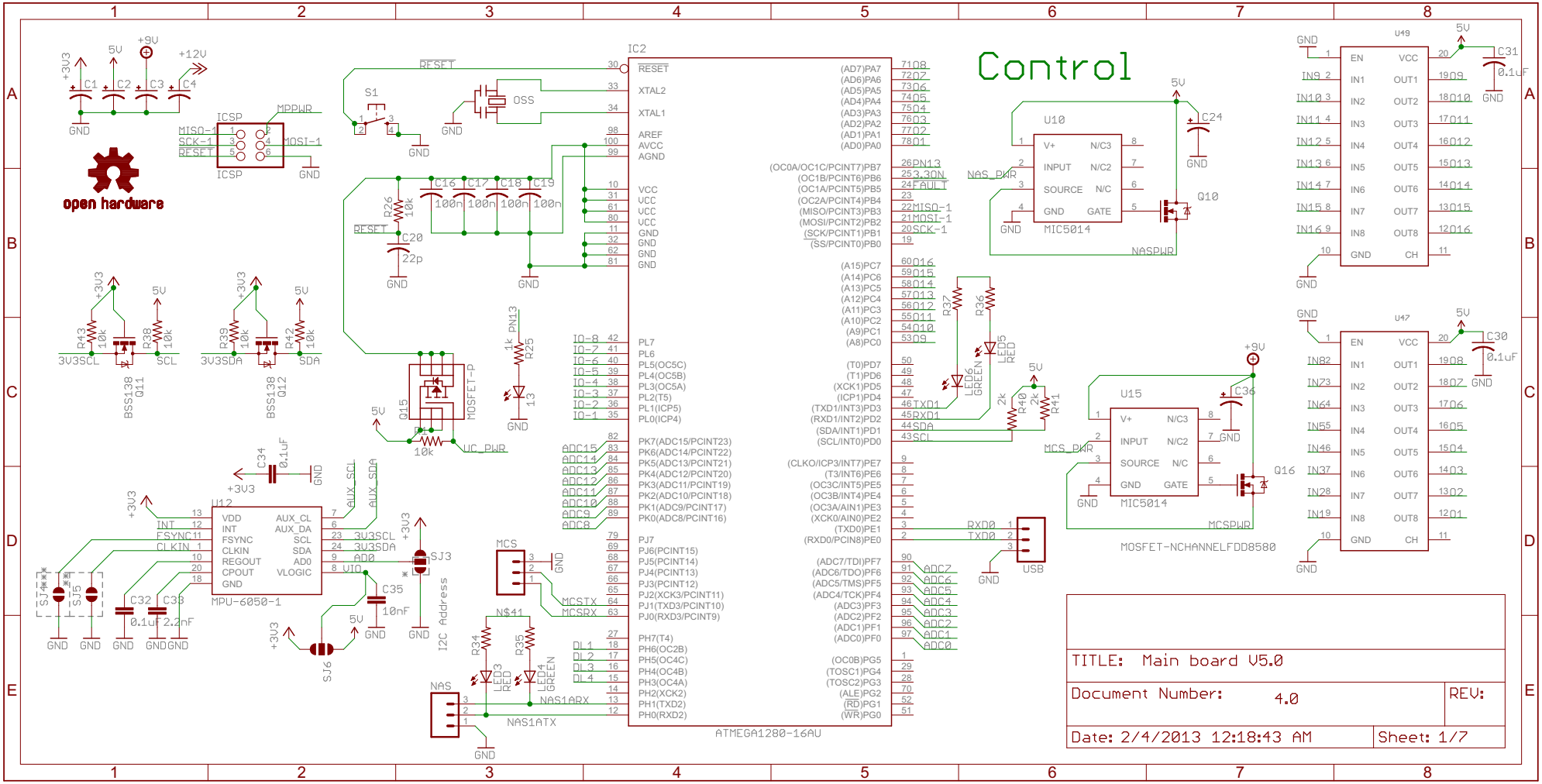
Control
IC2
ATMEGA1280-16AU
U10
MIC5014
U15
MIC5014
U49
U47
U12
MPU-6050-1
MOSFET-NCHANNELFDD8580
TITLE: Main board V5.0
Document Number: 4.0
REV:
Date: 2/4/2013 12:18:43 AM
Sheet: 1/7

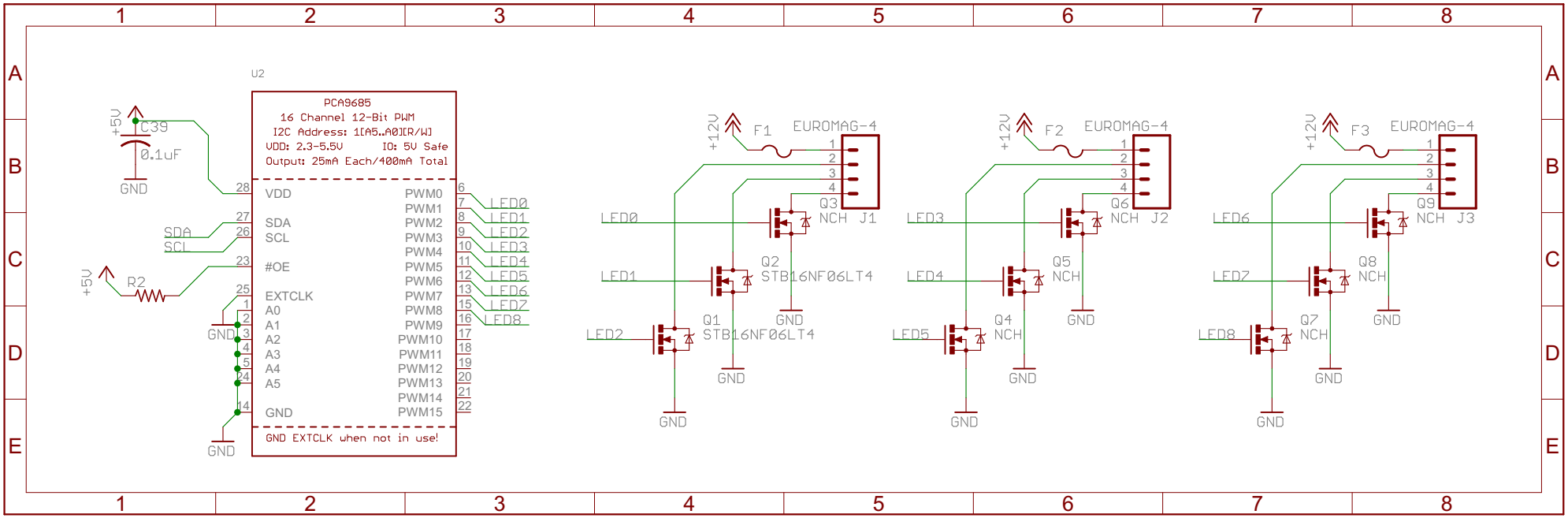
U2
PCA9685
16 Channel 12-Bit PWM
I2C Address: 1[A5..A0][R/W]
VDD: 2.3-5.5V IO: 5V Safe
Output: 25mA Each/400mA Total
VDD
SDA
SCL
#OE
EXTCLK
A0
A1
A2
A3
A4
A5
GND
PWM0
PWM1
PWM2
PWM3
PWM4
PWM5
PWM6
PWM7
PWM8
PWM9
PWM10
PWM11
PWM12
PWM13
PWM14
PWM15
GND EXTCLK when not in use!
+5V
C39
0.1uF
GND
SDA
SCL
R2
LED0
LED1
LED2
LED3
LED4
LED5
LED6
LED7
LED8
+12V
F1
F2
F3
EUROMAG-4
J1
J2
J3
Q1
Q2
Q3
Q4
Q5
Q6
Q7
Q8
Q9
STB16NF06LT4
NCH

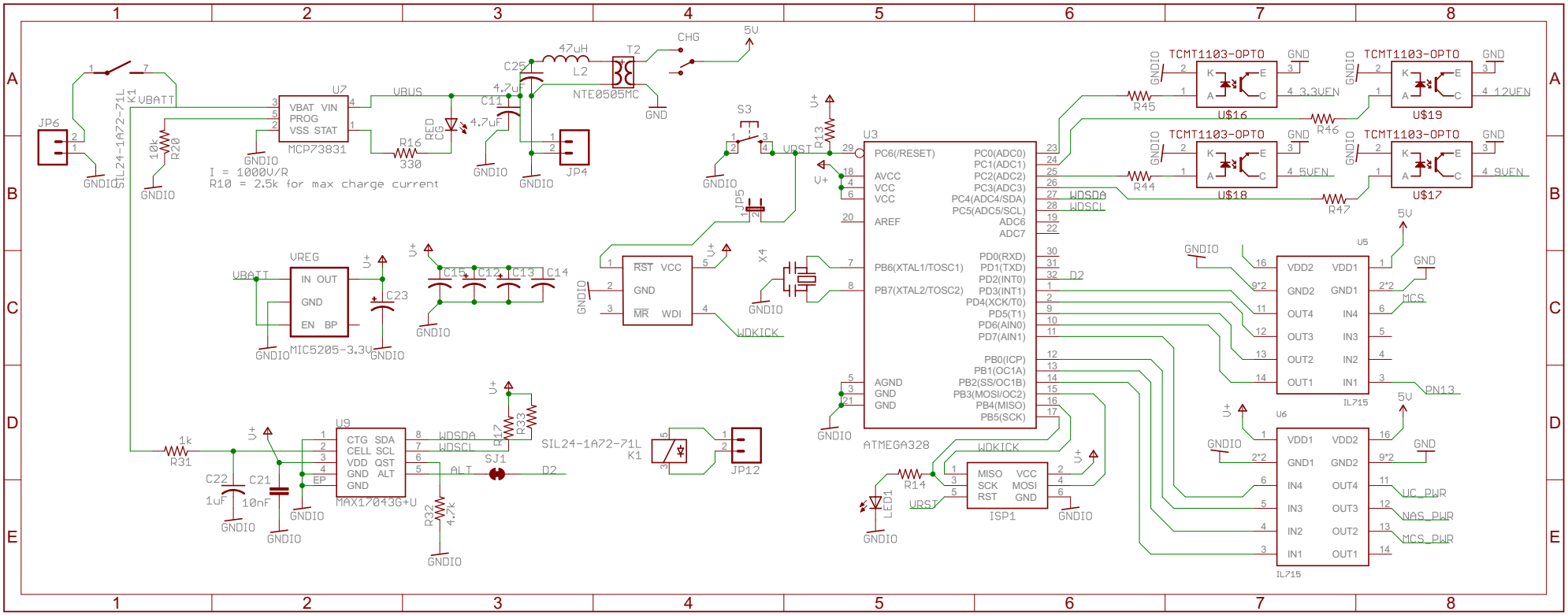
JP6
SIL24-1A72-71L
K1
VBATT
10k
R20
GNDIO
U7
VBAT VIN
PROG
VSS STAT
MCP73831
I = 1000V/R
R10 = 2.5k for max charge current
VBUS
R16
330
LED
RC0
C25
4.7uF
C11
4.7uF
47uH
L2
T2
NTE0505MC
CHG
5V
GND
JP4
S3
U3
PC6(/RESET)
AVCC
VCC
VCC
AREF
PB6(XTAL1/TOSC1)
PB7(XTAL2/TOSC2)
AGND
GND
GND
PC0(ADC0)
PC1(ADC1)
PC2(ADC2)
PC3(ADC3)
PC4(ADC4/SDA)
PC5(ADC5/SCL)
ADC6
ADC7
PD0(RXD)
PD1(TXD)
PD2(INT0)
PD3(INT1)
PD4(XCK/T0)
PD5(T1)
PD6(AIN0)
PD7(AIN1)
PB0(ICP)
PB1(OC1A)
PB2(SS/OC1B)
PB3(MOSI/OC2)
PB4(MISO)
PB5(SCK)
ATMEGA328
WDSDA
WDSCL
D2
WDKICK
URST
R13
JP5
X4
RST VCC
GND
MR WDI
VREG
IN OUT
GND
EN BP
MIC5205-3.3V
C23
C15
C12
C13
C14
U9
CTG SDA
CELL SCL
VDD QST
GND ALT
GND
EP
MAX17043G+U
ALT
SJ1
R17
R33
R32
4.7k
R31
1k
C22
1uF
C21
10nF
SIL24-1A72-71L
K1
JP12
R14
LED1
ISP1
MISO VCC
SCK MOSI
RST GND
TCMT1103-OPTO
U$16
U$19
U$18
U$17
R45
R46
R44
R47
3.3VEN
12VEN
5VEN
9VEN
U5
U6
IL715
VDD2 VDD1
GND2 GND1
OUT4 IN4
OUT3 IN3
OUT2 IN2
OUT1 IN1
MCS
PN13
UC_PWR
NAS_PWR
MCS_PWR

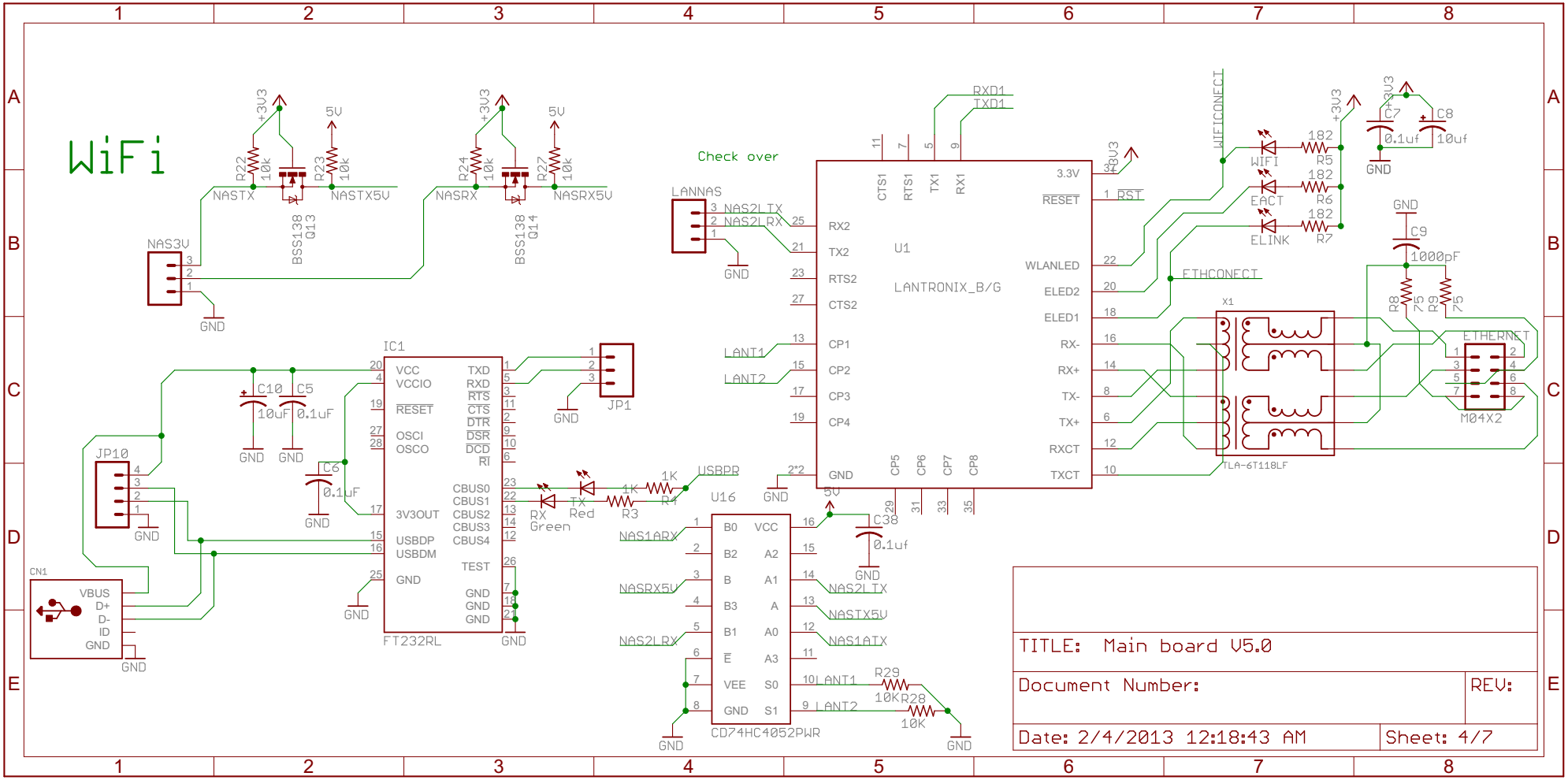
WiFi
Check over
U1
LANTRONIX_B/G
IC1
FT232RL
U16
CD74HC4052PWR
X1
TLA-6T118LF
M04X2
JP1
JP10
CN1
LANNAS
NAS3V
TITLE: Main board V5.0
Document Number:
REV:
Date: 2/4/2013 12:18:43 AM
Sheet: 4/7

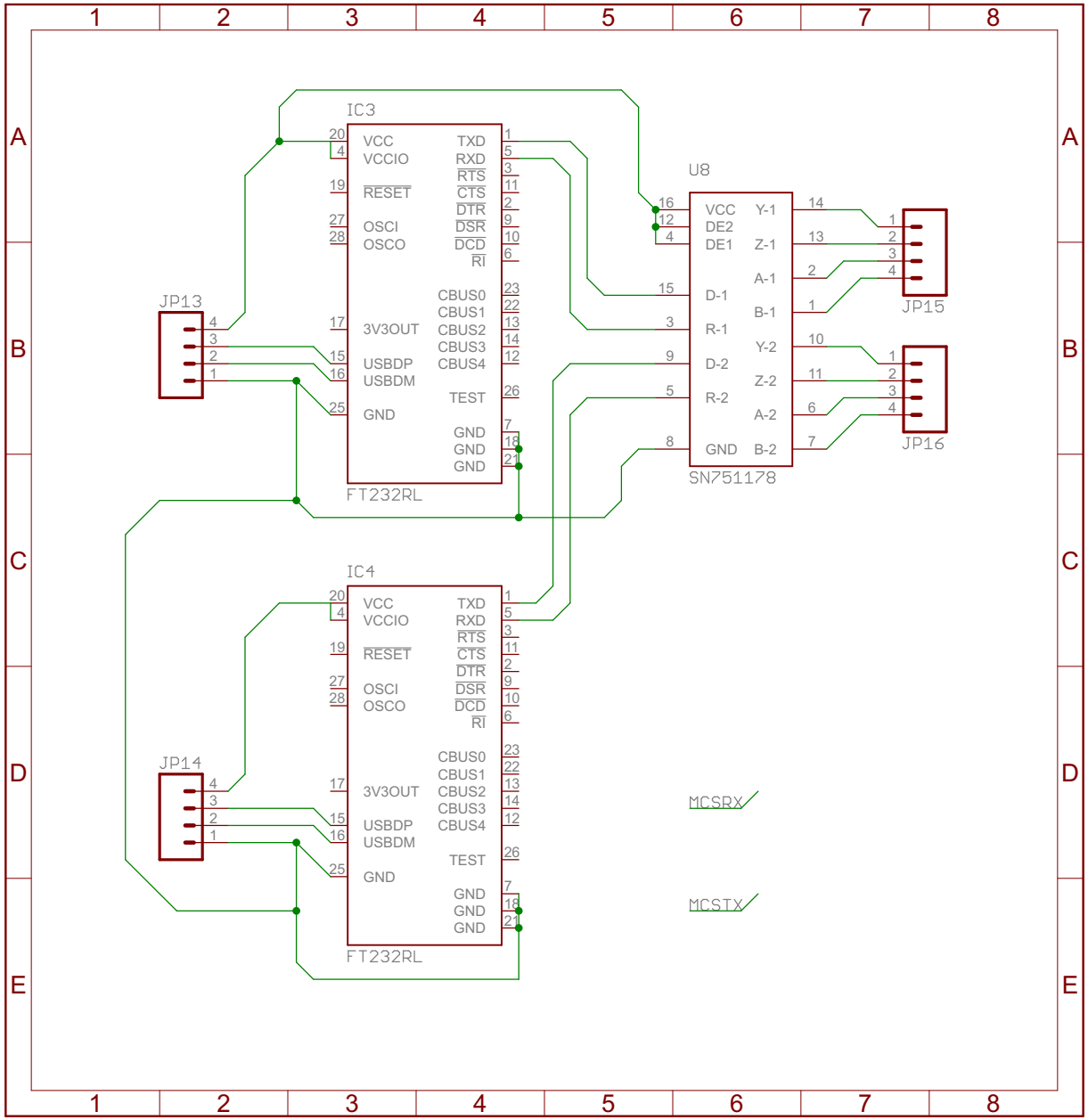
IC3
VCC
VCCIO
RESET
OSCI
OSCO
3V3OUT
USBDP
USBDM
GND
TXD
RXD
RTS
CTS
DTR
DSR
DCD
RI
CBUS0
CBUS1
CBUS2
CBUS3
CBUS4
TEST
GND
GND
GND
FT232RL
JP13
U8
VCC
DE2
DE1
D-1
R-1
D-2
R-2
GND
Y-1
Z-1
A-1
B-1
Y-2
Z-2
A-2
B-2
SN751178
JP15
JP16
IC4
VCC
VCCIO
RESET
OSCI
OSCO
3V3OUT
USBDP
USBDM
GND
TXD
RXD
RTS
CTS
DTR
DSR
DCD
RI
CBUS0
CBUS1
CBUS2
CBUS3
CBUS4
TEST
GND
GND
GND
FT232RL
JP14
MCSRX
MCSTX

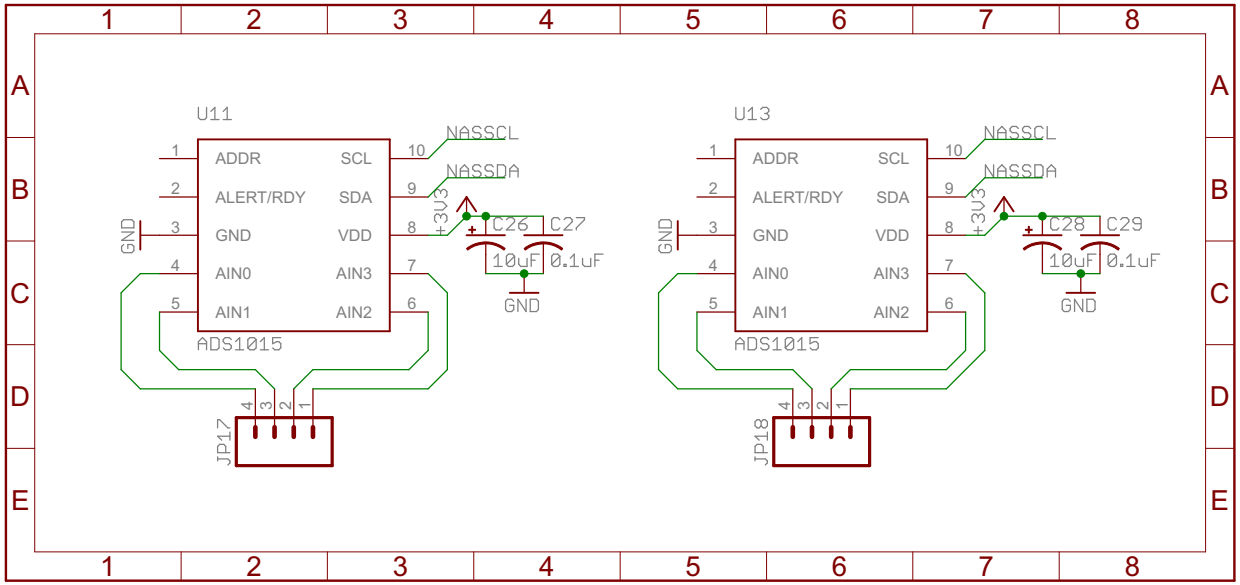
U11
ADDR
ALERT/RDY
GND
AIN0
AIN1
SCL
SDA
VDD
AIN3
AIN2
ADS1015
NASSCL
NASSDA
+3V3
C26
C27
10uF
0.1uF
GND
JP17
U13
ADDR
ALERT/RDY
GND
AIN0
AIN1
SCL
SDA
VDD
AIN3
AIN2
ADS1015
NASSCL
NASSDA
+3V3
C28
C29
10uF
0.1uF
GND
JP18

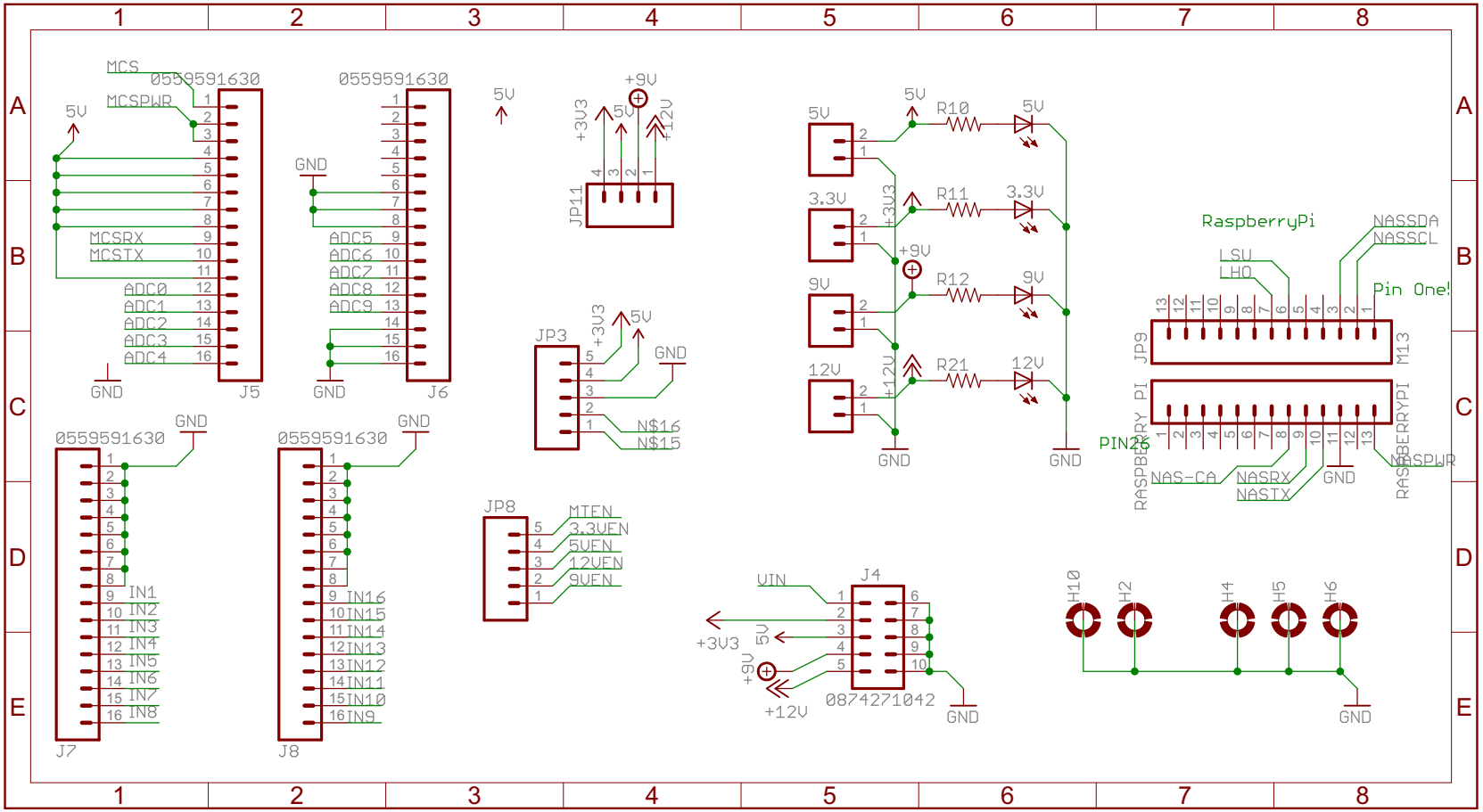
MCS
MCSPWR
5V
0559591630
J5
MCSRX
MCSTX
ADC0
ADC1
ADC2
ADC3
ADC4
GND
J6
ADC5
ADC6
ADC7
ADC8
ADC9
JP11
+3V3
+9V
+12V
JP3
N$16
N$15
JP8
MTEN
3.3VEN
5VEN
12VEN
9VEN
J7
IN1
IN2
IN3
IN4
IN5
IN6
IN7
IN8
J8
IN16
IN15
IN14
IN13
IN12
IN11
IN10
IN9
J4
VIN
0874271042
R10
R11
R12
R21
3.3V
9V
12V
RaspberryPi
NASSDA
NASSCL
LSU
LHO
Pin One!
JP9
M13
RASPBERRY PI
PIN26
NAS-CA
NASRX
NASTX
RASPWR
H10
H2
H4
H5
H6