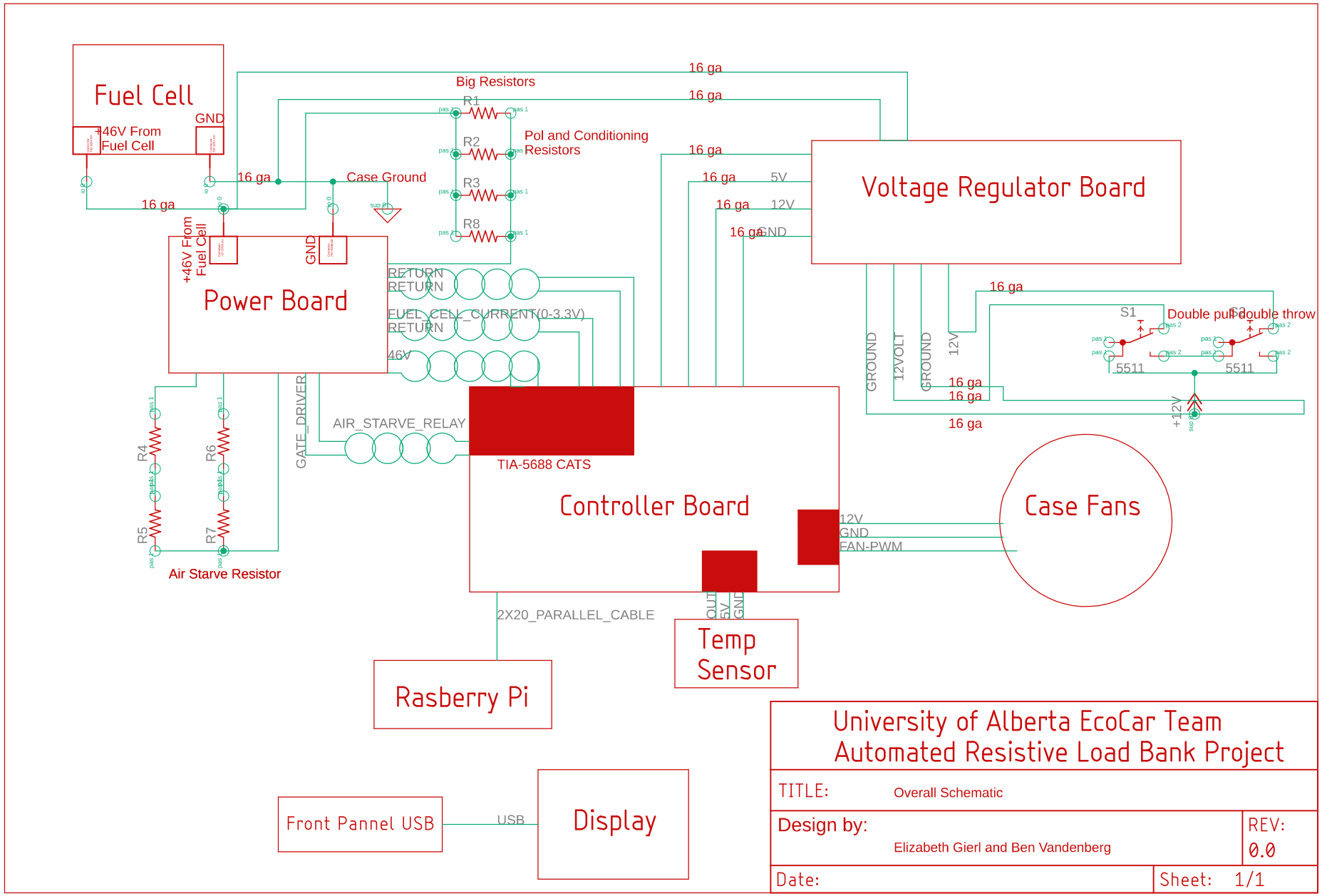
Fuel Cell
+46V From Fuel Cell
GND
16 ga
Big Resistors
R1
R2
R3
R8
Pol and Conditioning Resistors
Case Ground
Voltage Regulator Board
5V
12V
GND
+46V From Fuel Cell
GND
Power Board
RETURN
RETURN
FUEL_CELL_CURRENT(0-3.3V)
RETURN
46V
GROUND
12VOLT
GROUND
12V
S1
Double pull double throw
S2
5511
5511
+12V
R4
R5
R6
R7
Air Starve Resistor
GATE_DRIVER
AIR_STARVE_RELAY
TIA-5688 CATS
Controller Board
12V
GND
FAN-PWM
Case Fans
2X20_PARALLEL_CABLE
OUT
5V
GND
Temp Sensor
Rasberry Pi
Front Pannel USB
USB
Display
University of Alberta EcoCar Team
Automated Resistive Load Bank Project
TITLE: Overall Schematic
Design by: Elizabeth Gierl and Ben Vandenberg
REV: 0.0
Date:
Sheet: 1/1