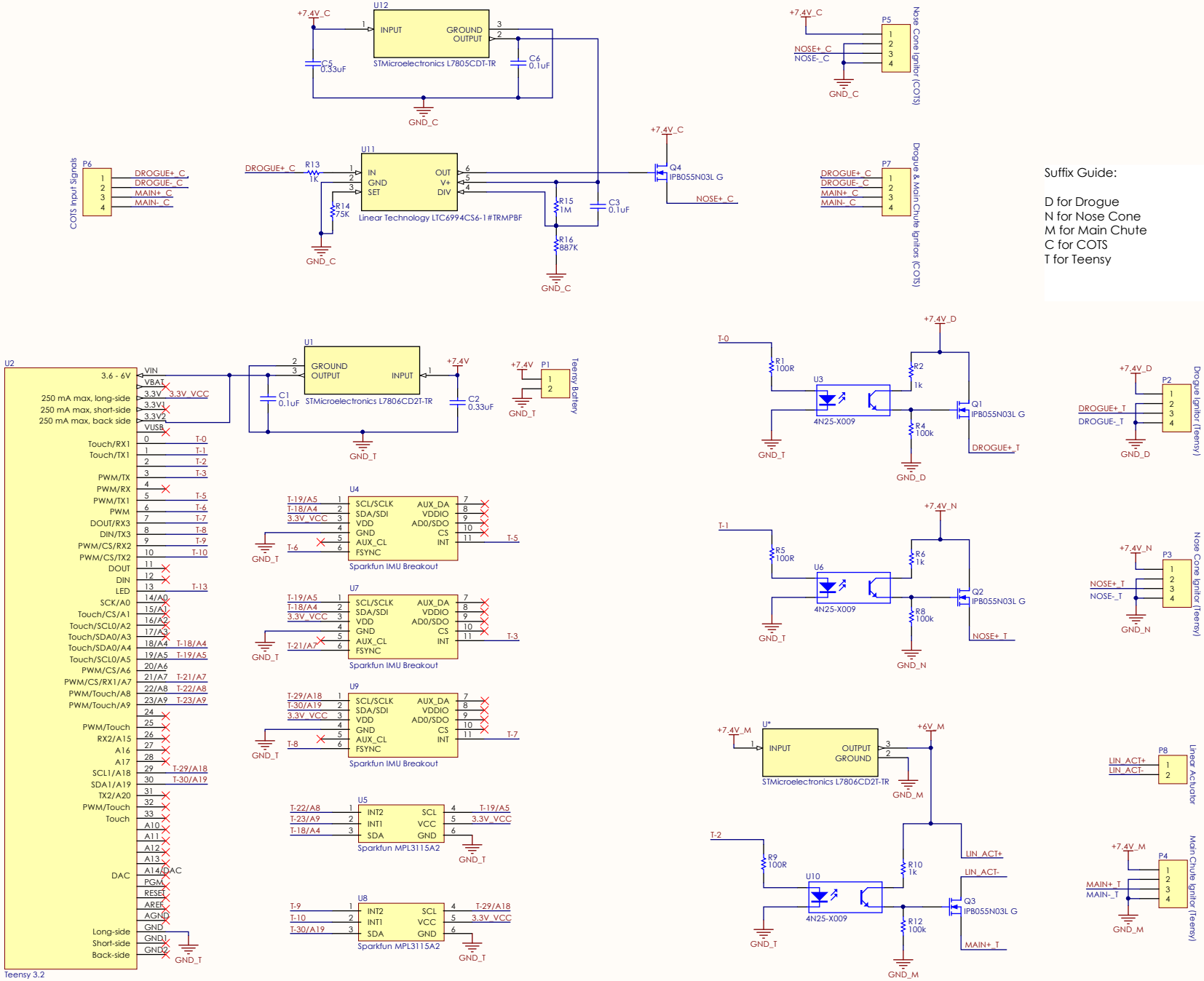

Title		
Size A	Number	Revision
Date: 26/03/2017	Sheet of	
File: C:\Users\..\2017_Avionics_Integrated.DDB\Sch.SchDoc	Drawn By:	