Q1 Alternatives (note V_{gs} = 7.5V):
- IAUZ30N10S5L240 100V, Q_g=8nC, $R_{DS(on)}$=26.0mΩ, $0.5256 USD, SON-8FL 3x3mm low
- CSD19538Q3A 100V, Q_g=4nC, $R_{DS(on)}$=58mΩ, $0.3715 USD, SON-8 3x3mm
- CSD19537Q3 100V, Q_g=12nC, $R_{DS(on)}$=13.8mΩ, $0.9603 USD, SON-8 3x3mm
- TPN19008QM 80V, Q_g=16nC, $R_{DS(on)}$=20.0mΩ, $0.5861 USD, SON-8 3x3mm
- NVTFS6H860NL 80V, Q_g=12nC, $R_{DS(on)}$=20.0mΩ, $0.7595 USD, SON-8 3x3mm low
- NVTFS6H850N 80V, Q_g=19nC, $R_{DS(on)}$=89.5mΩ, $0.6620 USD, SON-8 3x3mm low
- NVTFS6H854N 80V, Q_g=13nC, $R_{DS(on)}$=14.5mΩ, $0.9185 USD, SON-8 3x3mm low
- BSZ110N08NS5 80V, Q_g=15nC, $R_{DS(on)}$=13.4mΩ, $0.8984 USD, SON-8FL 3x3mm
- BSC117N08NS5 80V, Q_g=15nC, $R_{DS(on)}$=13.7mΩ, $0.9156 USD, SON-8 5x6mm
- CSD19534Q5A 100V, Q_g=13nC, $R_{DS(on)}$=14.1mΩ, $0.8039 USD, SON-8 5x6mm
- BSC160N10NS3G 100V, Q_g=15nC, $R_{DS(on)}$=17.8mΩ, $0.8332 USD, SON-8 5x6mm
NVMFS040N10MCL

Q2 Alternatives:
1. BSZ096N10LS5 100V, Q_g=22nC, $R_{DS(on)}$=9.6mΩ, $1.3702 USD, SON-8FL 3x3mm, 11.0A
2. TPN1200APL 100V, Q_g=24nC, $R_{DS(on)}$=11.5mΩ, $0.8041 USD, SON-8 3x3mm, 11.0A low
3. BSZ110N08NS5 80V, Q_g=15nC, $R_{DS(on)}$=13.4mΩ, $0.8984 USD, SON-8FL 3x3mm, 11.0A low-ish
4. BSZ097N10NS5 100V, Q_g=22nC, $R_{DS(on)}$=9.7mΩ, $1.2293 USD, SON-8FL 3x3mm, 11.0A
5. BSC117N08NS5 80V, Q_g=12nC, $R_{DS(on)}$=13.7mΩ, $0.9156 USD, SON-8 5x6mm, 19.0A
6. ISC0805NLS 100V, Q_g=20nC, $R_{DS(on)}$=7.8mΩ, $1.0070 USD, SON-8 5x6mm, 13.0A no stock, EOL
7. BSC0805LS 100V, Q_g=20nC, $R_{DS(on)}$=7.0mΩ, $0.4368 USD, SON-8 5x6mm, 14.0A EOL
8. BSC098N10NS5 100V, Q_g=17nC, $R_{DS(on)}$=10.2mΩ, $0.7441 USD, SON-8 5x6mm, 11.0A
9. SiR882ADP 100V, Q_g=30nC, $R_{DS(on)}$=7.7mΩ, $1.4015 USD, SON-8 5x6mm, 17.6A
10. SiR876ADP 100V, Q_g=26nC, $R_{DS(on)}$=9.5mΩ, $1.0008 USD, SON-8 5x6mm, 15.2A
NVMFS015N10MCL, NVMFS021N10MCL, TPH1400ANH, BSZ084N08NS5, BSC072N08NS5, FDMS86101 (???)

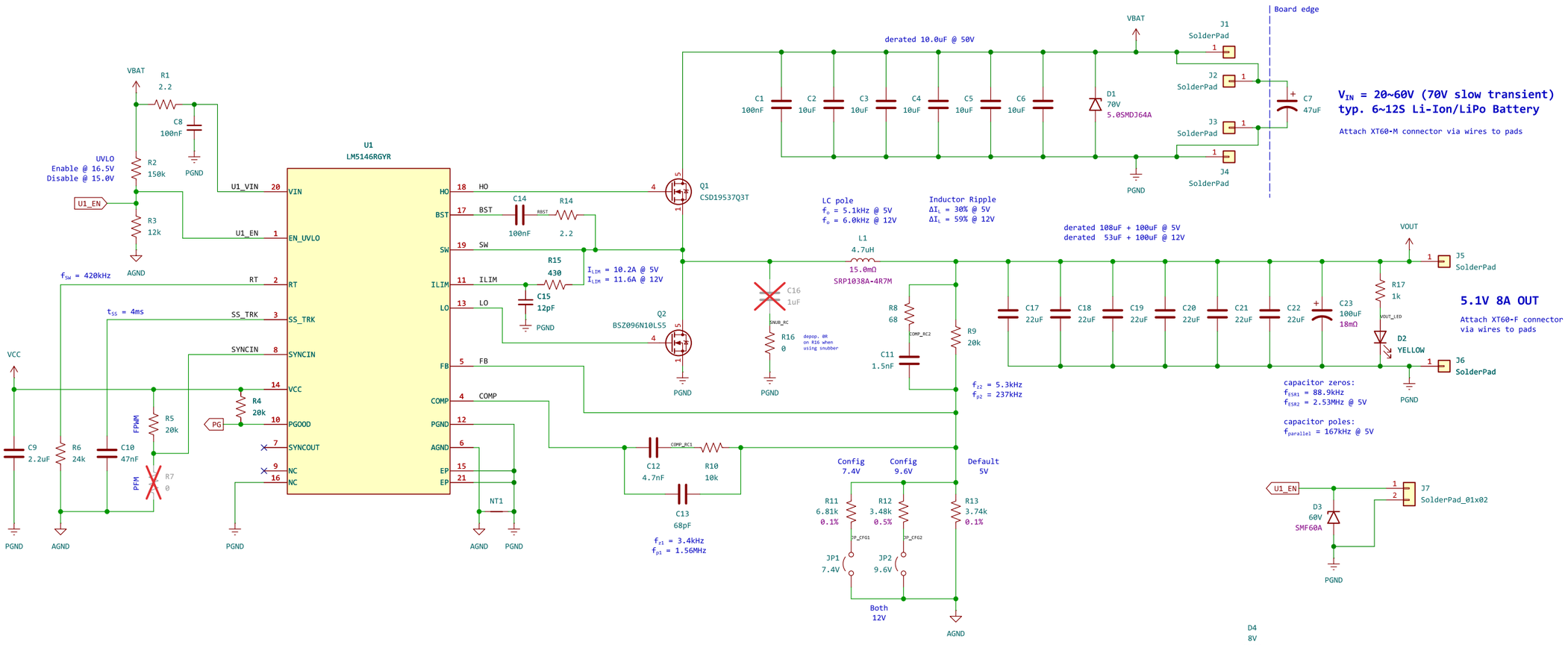

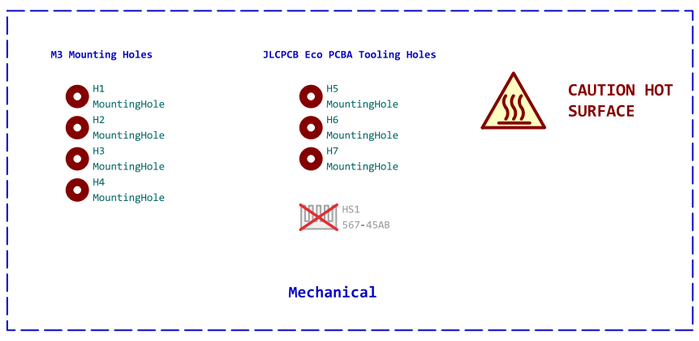

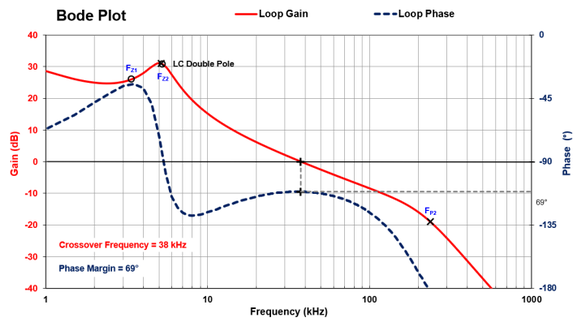

Stability Analysis of Compensation @ 5V

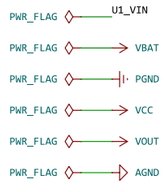

An independent prototype design for the Super Step Down V3
UBCO Aerospace Club [Julian Joaquin]

Sheet: /
File: 2025_SSDP3A2.kicad_sch

Title: Super Step Down P3A2

Size: A3	Date: 2025-10-15	Rev: B
KiCad E.D.A. 9.0.4		Id: 1/1