Genetic Fuzzy System–Tuned PID Controller for Pitch Attitude Hold of a Fighter Aircraft

Reka Patel[1][0009-0001-7596-7131], Wilhelm Louw[2][0009-0009-8683-1932], and Dr. Kelly Cohen[3][0000-0002-8655-1465]

University of Cincinnati, Cincinnati OH 45221, USA
patel9rk@mail.uc.edu louwwa@mail.uc.edu
cohenky@ucmail.uc.edu

Abstract. Modern fly-by-wire aircraft and unmanned aerial vehicles increasingly rely on advanced control strategies to ensure performance, robustness, and safety under nominal and degraded operating conditions. Fuzzy logic controllers have demonstrated strong robustness and fast convergence compared to conventional linear and PID-based approaches; however, their performance is highly dependent on manual tuning of membership functions and rule bases. This paper presents a Genetic Fuzzy System (GFS) approach for optimizing a fuzzy PID pitch attitude hold controller for an F-4 fighter aircraft model. A genetic algorithm is employed to automatically tune the membership functions and rule parameters of a Takagi–Sugeno–Kang fuzzy inference system, with the objective of minimizing settling time while preserving stability and robustness. The proposed GFS-PID controller is trained on a nominal approach condition and evaluated on both nominal and 50% degraded aircraft dynamics to assess generalization and robustness under uncertainty. Simulation results demonstrate that the GA-optimized fuzzy PID controller achieves significant reductions in settling time and rise time compared to a manually tuned fuzzy PID controller, without increasing overshoot or degrading steady-state performance. In the degraded approach case, the proposed method yields a settling time reduction of up to 25.5%, highlighting its effectiveness in noisy and uncertain environments. These results indicate that genetic optimization provides a systematic and reliable framework for enhancing fuzzy flight control systems and supports the use of Genetic Fuzzy Systems for robust autonomous aircraft control applications.

Keywords: Genetic Algorithm · Flight Control · Fuzzy Logic · AI · Robustness · Optimization · Fuzzy Systems · Genetic Fuzzy System · PID

1 Introduction

Autopilot and stability modes are becoming increasingly crucial with the growing use of unmanned aerial vehicles (UAVs) and the adoption of fly-by-wire control

systems in modern fighter jets. Fly-by-wire control systems utilize computers to process flight control inputs from the pilot or autopilot and transmit the corresponding electrical signals to the flight control surface actuators. This approach replaces the mechanical system where pilot inputs directly moved the surface actuators. While these fly-by-wire systems represent a significant advancement over automatic systems, they now offer the potential to further optimize the system for enhanced speed and stability.

As unmanned missions and the use of UAVs in industry become more prevalent, it's crucial to optimize their capabilities and efficiency. While Fuzzy logic controllers offer a more adaptable solution compared to traditional linear and optimal control methods, providing faster convergence without compromising stability and performance robustness [6], they can be further enhanced by using optimization frameworks. This paper's solution utilizes a Genetic Algorithm (GA) to optimize the membership functions and rule base of a fuzzy-PID controller. The method will reduce settling time and rise time without compromising stability. Testing the model on a degraded approach will also demonstrate the system's ability to deliver an increase in performance in an environment with noise, simulating aircraft instability. By finding the most optimal performance while maintaining robustness, users can gain greater confidence in their system and further expand the capabilities of the aircraft.

Recent flight control research has explored numerous control techniques for aircraft and UAV attitude regulation including model predictive control (MPC), learning-based approaches, and sliding mode control. The studies show that these methods can improve robustness in nonlinear or uncertain operating conditions [12], [2]. Despite these advancements, PID-based controls remain widely employed in flight control systems due to their simplicity and ease of certification. As a result, some research focuses on enhancing PID structures rather than replacing them. Specifically, hybrid approaches combining fuzzy logic with evolutionary optimization have shown improved response, robustness, and adaptability compared to just PID or fuzzy controllers. Recent studies have shown that these genetic algorithm-optimized fuzzy PID controllers can outperform fixed-gain controllers in attitude and trajectory control tasks [10]. They also improve performance under uncertainty and disturbances [11]. The work in this paper follows the direction of modern research through the application of genetic optimization to a fuzzy PID controller aiming to improve performance while retaining the structured nature of classic control architectures.

2 Background

Many modern aircraft systems allow for the implementation of modern control techniques to increase performance and create more effective autopilot modes. Some previous research on modern control in aircraft and UAVs focuses towards fault detection, isolation, recovery, proportional and rate feedback schemes, and quantitative feedback theory for pitch attitude hold systems [3]. Fuzzy logic based work has been completed by Fujimoro at Shizuoka University where they

analyzed gain-scheduled control using fuzzy logic based on linear matrix inequalities to implement a full-order observer-based flight control [7]. Other modern control techniques for flight application include neural networks [8], nonlinear control [9], and the use of PID controllers. In the past fuzzy controllers have had issues with slow convergence and slower rise time compared to conventional controllers. The goal of this paper is to design an optimal pitch attitude hold system for an F-4 fighter jet utilizing a GA tuned fuzzy PID controller, which is also known as a Genetic Fuzzy System (GFS), with the aim of improving settling time and consequently, the rise time.

To represent different control changes there are two different scenarios examined: approach and a degraded approach (50% degraded), as highlighted in [3]. Each case has the actuator dynamics for the system modeled as 10/(s+10). The two different cases are represented by the following two transfer functions.

Approach:

$$G(s) = \frac{3361s^2 + 1357s + 102.2}{230.6s^5 + 2508s^4 + 2161s^3 + 1406s^2 + 63.04s + 32.01} \tag{1}$$

Approach, 50% degraded:

$$G(s) = \frac{3361s^2 + 1372s + 105}{230.6s^5 + 2472s^4 + 1731s^3 + 744.8s^2 + 36.92s + 16} \tag{2}$$

Previously, pitch attitude hold systems were designed using a constant gain approach as opposed to a variable gain approach based on fuzzy logic control. The main advantages of using a fuzzy approach are the simplicity of implementation and robustness of characteristics. The fuzzy system used for comparison was designed utilizing the MATLAB Fuzzy Logic toolbox and was manually tuned. It is a 49-rule Mamdani Fuzzy Inferencing System (FIS) with two inputs and one output. The two inputs are error and rate of error and the output is elevator deflection. Seven membership functions are used to describe each input and five membership functions the output. When compared to a GA tuned PID-controller and a root-locus gain controller, the fuzzy system has a lower settling time, lower peak value, and less steady state error. However, the fuzzy system does have a slower rise time than the other methods. These results are summarized in the following table and figures.

Table 1. Previous Performance Comparison [6]

Case	T_s **(s)**	T_r **(s)**	T_p **(s)**	M_p **(deg)**	**FV (deg)**
Root Locus F4 Approach (Design Condition)	23.6	1.09	3.14	1.09	0.62
PID F4 Approach (Design Condition)	7.08	1.27	4.98	1.023	1.00
Fuzzy F4 Approach (Design Condition)	1.65	1.68	1.74	1.013	1.00
Root Locus 50% Reduction in $C_{m\alpha}$ and C_{mq}	25.8	1.16	3.57	1.42	0.77
PID 50% Reduction in $C_{m\alpha}$ and C_{mq}	8.0	1.03	1.35	1.045	1.01
Fuzzy 50% Reduction in $C_{m\alpha}$ and C_{mq}	1.66	1.69	1.75	1.014	1.00

In table 1, T_s is settling time, T_r is rise time, T_p is peak time, M_p is peak overshoot, and FV is the final value.

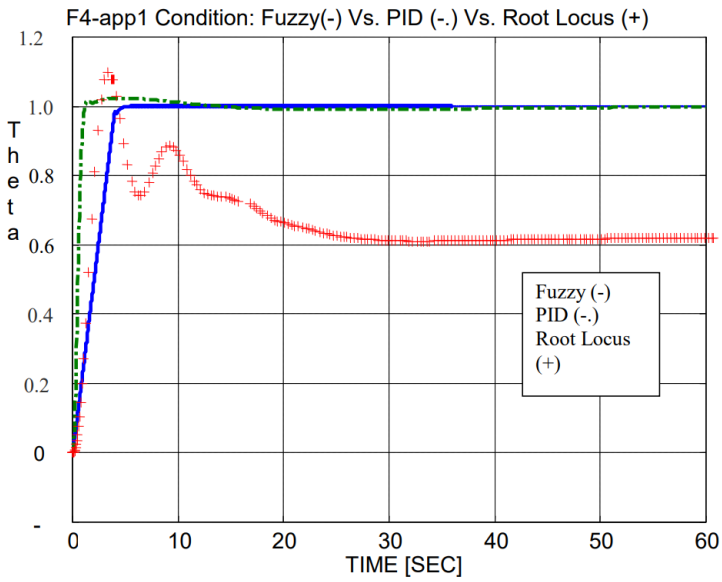

Fig. 1. Fuzzy vs PID vs Root Locus Performance Comparison [6]

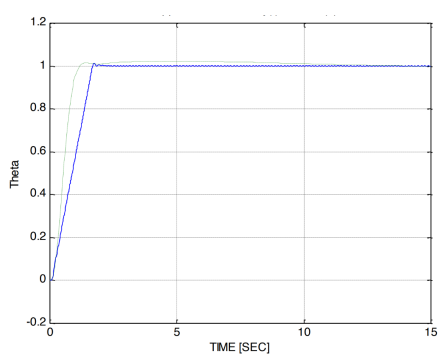

Fig. 2. Fuzzy vs PID Control - Approach

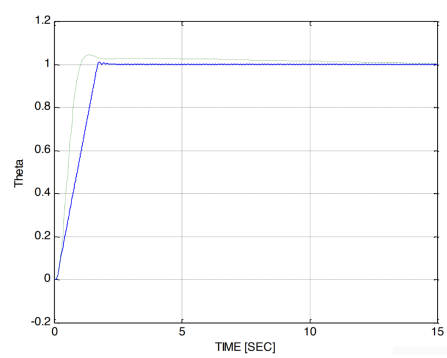

Fig. 3. Fuzzy vs PID Control - Degraded Approach

These graphs demonstrate that the fuzzy logic controller outperforms both the root locus and PID controllers in terms of settling time and peak overshoot

for both cases. However, it does not outperform them in terms of rise time and peak time. Additionally, the fuzzy PID algorithm maintains its performance even in degraded usage scenarios, unlike the other methods.

3 Method

All the following systems were run on a computer with an Intel(R) Core(TM) Ultra 9 185H (2.30 GHz) processor and two graphics processing units (GPUs). MATLAB version R2025b was used along with simulink, the optimization toolbox, and the fuzzy logic toolbox [1].

For this paper, we adapted the Simulink model described in the section above to directly compare the results of their manually tuned Fuzzy Logic PID controller with our Genetic Fuzzy PID controller. This comparison aims to highlight the significance of optimization in enhancing the performance of fuzzy logic-based controllers.

3.1 Simulation

In the Simulink model, the PID controller takes the step input from the pitch command, processes it through the proportional, integral, and derivative paths, and incorporates the aircraft transfer function to produce the pitch output. The fuzzy-PID controller, which is being optimized using a genetic algorithm, operates similarly to the standard PID controller. However, instead of a fixed constant gain, the fuzzy logic system (FIS) provides a variable gain. It receives two inputs: the error and the derivative of the error. The controller consists of three function blocks, each containing a custom fuzzy inference system (FIS) block. These blocks store all the FIS parameters and are updated at each iteration by the genetic algorithm's output, which includes the membership function and the rule base. These blocks are responsible for tuning the gain values. Each gain is then summed, passed into the transfer function, and ultimately outputs the pitch. The genetic fuzzy system (GFS) was trained on the approach case and tested on the degraded approach case. The approach Simulink model is depicted in the accompanying diagrams.

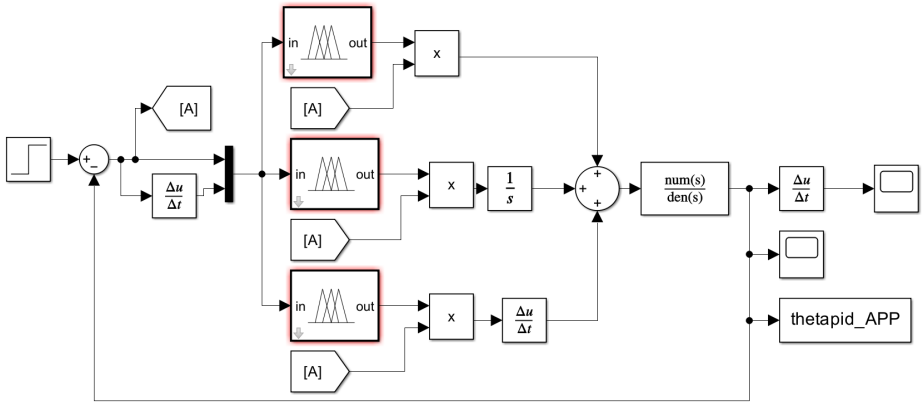

Fig. 4. Fuzzy PID Simulink Model

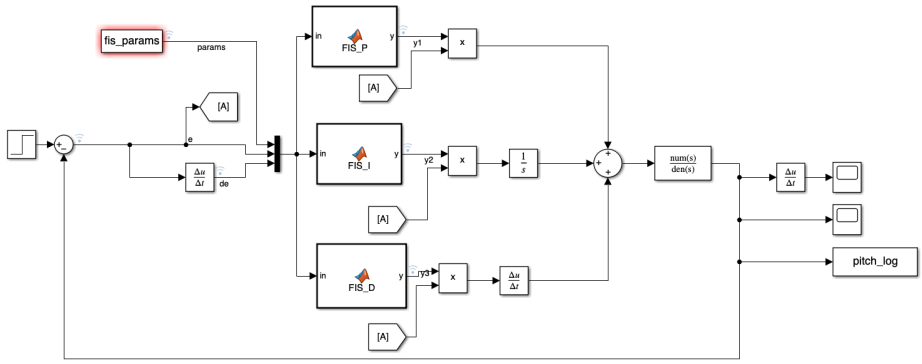

Fig. 5. GFS PID Simulink Model

Figure 4 showcases the original Simulink model, utilizing a manually tuned MATLAB Fuzzy Logic Toolbox block. Figure 5 showcases this paper's Simulink Model where the Fuzzy Logic toolbox block is replaced by a function block with a custom FIS. It also has the "from Workspace" block that introduces the FIS parameters from the Genetic Algorithm to the Simulink model. MATLAB was utilized to create the GA, using their Optimization Toolbox that tuned the FIS blocks. The model used in the original research was not changed, a GA was just added in addition and a custom FIS replaced the Matlab fuzzy toolbox block. Additionally, same as the previous research, only the approach case was used for training and those optimal gains were tested on the degraded approach case.

3.2 Genetic Algorithm

For the genetic algorithm, the parameters that were modified to identify the optimal parameters were the population size, the number of generations, the lower bounds, and the upper bounds. Through trial and error, the best parameters discovered were:

Table 2. Genetic Algorithm Parameters

Parameter	Value
Population size	100
Number of generations	50
Crossover fraction	0.8
Elite count	10

Table 3. Lower and Upper Bounds

Parameter	Lower Bound	Upper Bound
error P	-2	2
error I	-2	2
error D	-2	2
dt error P	-17	17
dt error I	-17	17
dt error D	-17	17
k P	-6	15
k I	-0.5	1.5
k D	-2	6

Where P represents the bounds for the Proportional FIS, I the Integral FIS, and D the Derivative FIS. The cost function aims to minimize the settling time for the simulation. The Pittsburgh approach is used for encoding the parameters of the FIS.[4]

3.3 Fuzzy System

This paper's custom FIS is a 0-order Takagi-Sugeno-Kang (TSK) system with five membership functions per input and a full rule base of 25 rules. TSK Fuzzy systems, due to their use of equations in the consequent, lend themselves well to systems which are informed by dynamic equations. There are three FISs, one for the Proportional gain, Integral gain and the Derivative gain. We found that keeping all three separate from each other gave the best model results. Each FIS's parameters are individually tuned, but the overarching structure of inputs, outputs, and rules remain the same, using the same input values.

The membership functions are triangular, except for the shoulders, which are trapezoidal and ensure consistent behavior at the output bounds.

Table 4. FIS Comparison

Parameter	Fuzzy PID FIS	GFS PID FIS
Type	Mamdani	TSK
Input 1 MF	7	5
Input 2 MF	7	5
Rule base Size	49	25
Output MF	5	N/A
MF shape	Triangular	Triangular

4 Results

For the approach case (training) the following table and graph compares the original fuzzy-PID controller with the new GFS version this paper developed.

Table 5. Approach Case Comparison

Variable	Fuzzy PID	GFS PID	Improvement
Rise Time (s)	0.4849	0.4123	15%
Settling Time (s)	0.8474	0.6929	18.2%
Peak (deg)	1.0260	1.0266	- 0.06%
Peak Time (s)	1.1900	0.8600	27.7%

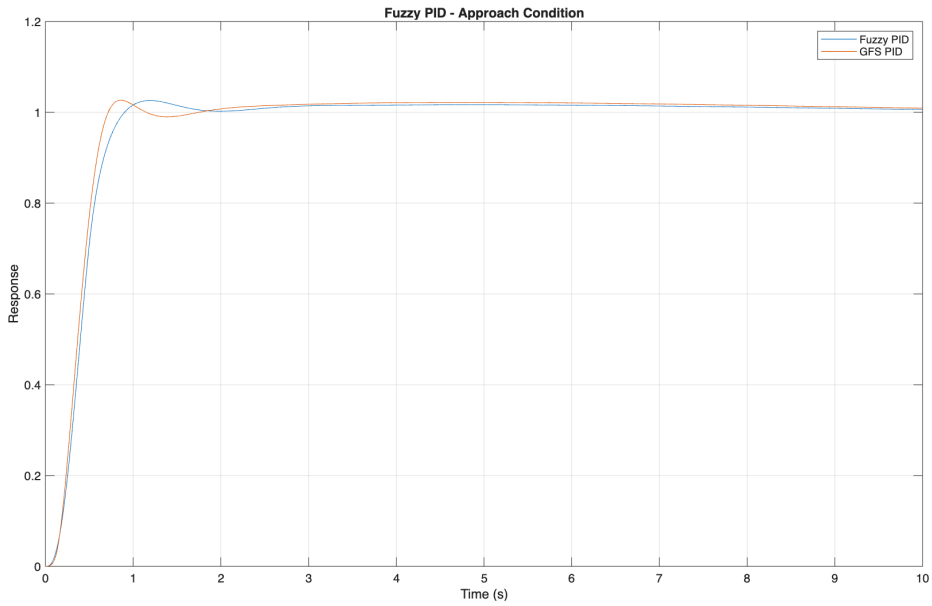

Fig. 6. Approach Case Comparison

The following table and graph compare the results of the 50% degraded approach case (Testing).

Table 6. Approach (50% Degraded) Case Comparison

Variable	**Fuzzy PID**	**GFS PID**	**Improvement**
Rise Time (s)	0.4566	0.3937	13.7%
Settling Time (s)	1.5535	1.1576	25.5%
Peak (deg)	1.0656	1.0615	0.3%
Peak Time (s)	1.0900	0.8700	20.2%

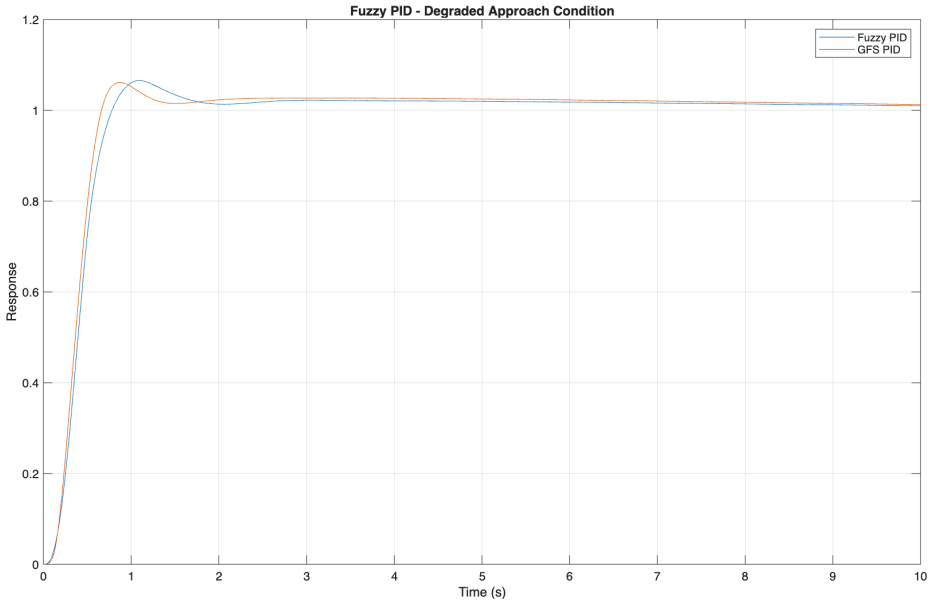

Fig. 7. Approach (50% Degraded) Case Comparison

5 Discussion

The results demonstrate that the GFS-PID controller effectively reduced the settling time and rise time. In the approach case, the rise time decreased by 0.0726 seconds (15%) and the settling time by 0.1811 seconds (18.2%). The peak value increased by 0.0006 degrees, which is negligible. For the degraded approach, the rise time reduced by 0.0629 seconds (13.8%), the settling time by 0.3959 seconds (25.5%), and the peak by 0.0041 degrees, which is also a negligible improvement. Therefore, the model successfully reduced the settling time and, consequently the rise time, without compromising other values. This proves that tuning a fuzzy logic PID controller with a genetic algorithm can enhance the results and lead to more optimal performance. In this case, the training model achieved a 18.2% reduction, and the testing model achieved a 25.5% reduction. Considering that the testing model introduces noise, it further demonstrates that a GA-optimized fuzzy PID controller provides better performance in uncertainty. In the future, this method can be applied to various scenarios, such as subsonic and supersonic cruise, and can be adapted to a wide range of autonomy use cases to optimize performance and stability.

6 Acknowledgments

The authors extend their thanks to the AI Bio Lab members of the University of Cincinnati for their feedback and continuous support.

References

1. Fuzzy logic toolbox user's guide. pp. 1–1, 2–75. Mathworks (1998), https://www.mathworks.com/help/fuzzy/index.html
2. Abbas, N., Khan, S., Ullah, F.: Survey of advanced nonlinear control strategies for uavs: Integration of sensors and hybrid techniques. Sensors **24**(11), 3286 (2024), https://doi.org/10.3390/s24113286
3. Bossert, D., Cohen, K.: Design of fuzzy pitch attitude hold systems for a fighter jet. In: AIAA Guidance, Navigation, and Control Conference and Exhibit. p. 4084 (2001)
4. Cordón, O., Herrera, F., Gomide, F., Hoffmann, F., Magdalena, L.: Ten years of genetic fuzzy systems: current framework and new trends. In: Proceedings joint 9th IFSA world congress and 20th NAFIPS international conference (Cat. No. 01TH8569). vol. 3, pp. 1241–1246. IEEE (2001)
5. Courcier, B., R.D.S.C.F.C.K.P.P., Viaña, J.: Genetic fuzzy system for pitch control on a f-4 phantom. In: Applications of Fuzzy Techniques, Proceedings of the 2022 Annual Conference of the North American Fuzzy Information Processing Society NAFIPS 2022 (2022)
6. David, B., Kelly, C.: PID and fuzzy logic pitch attitude hold systems for a fighter jet. In: AIAA Guidance, Navigation, and Control Conference and Exhibit (2002)
7. Fujimori, A., Tsunetomo, H., Wu, Z.Y.: Gain-scheduled control using fuzzy logic and its application to flight control. Journal of guidance, control, and dynamics **22**(1), 175–178 (1999)
8. Kim, B.S., Calise, A.J.: Nonlinear flight control using neural networks. Journal of Guidance, Control, and Dynamics **20**(1), 26–33 (1997)
9. Lin, Y., Liu, S.: Integrated projection gain and nonlinear control of unmanned air vehicle. In: Proceedings of the AIAA Guidance, Navigation, and Control Conference. pp. 437–446 (1998)
10. Rodríguez-Abreo, O., Pérez-Alcocer, R., Morales-Velázquez, L.: Fuzzy logic controller for uav with gains optimized via genetic algorithm. Heliyon **10**(6), e29507 (2024), https://www.sciencedirect.com/science/article/pii/S2405844024023946
11. Vladov, S.: Cognitive method for synthesising a fuzzy controller mathematical model using a genetic algorithm for tuning. Big Data and Cognitive Computing **9**(1), 17 (2025), https://www.mdpi.com/2504-2289/9/1/17
12. Vo, V.A., Le, T.L.M., Nguyen, V.B.: A comprehensive survey of uav control algorithms: Integrating classical methods with artificial intelligence for enhanced trajectory tracking. AIMS Electronics and Electrical Engineering **10**(1), 26–53 (2026), https://www.aimspress.com/article/doi/10.3934/electreng.2026002