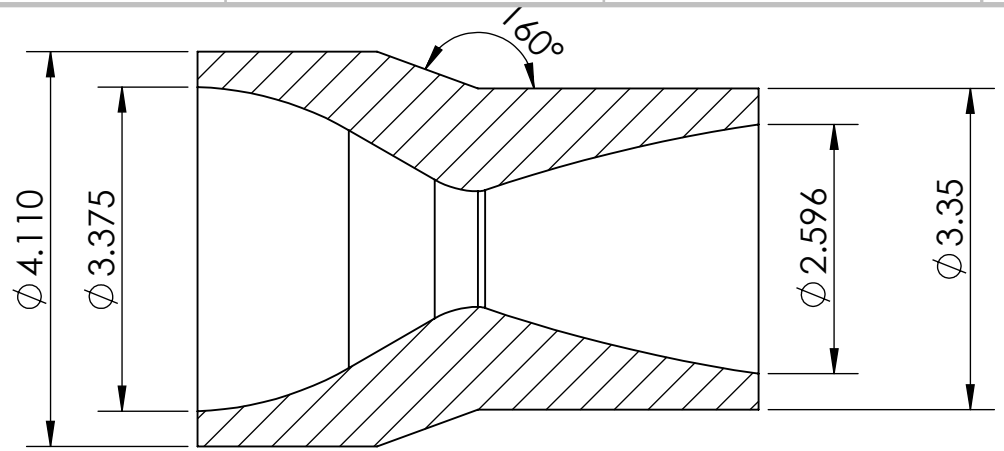

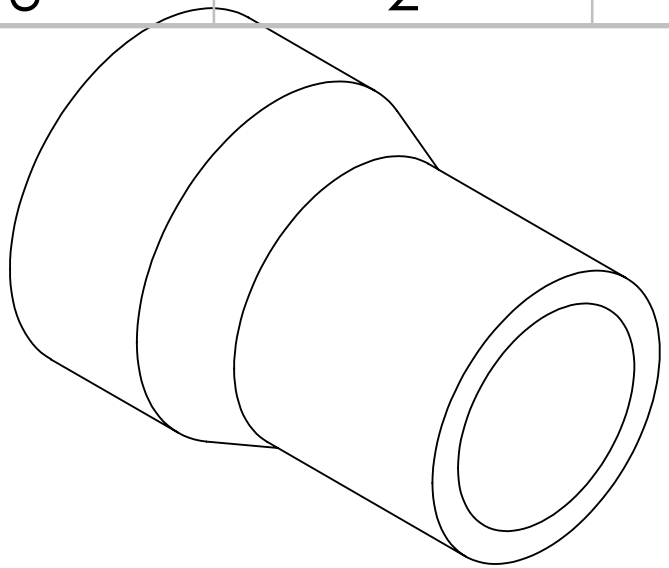

SECTION A-A

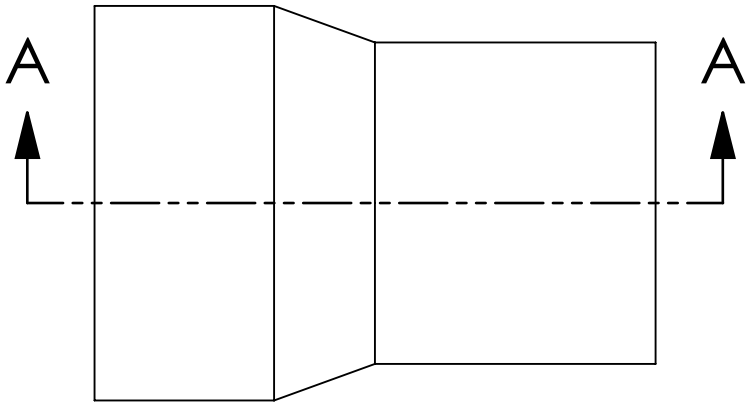

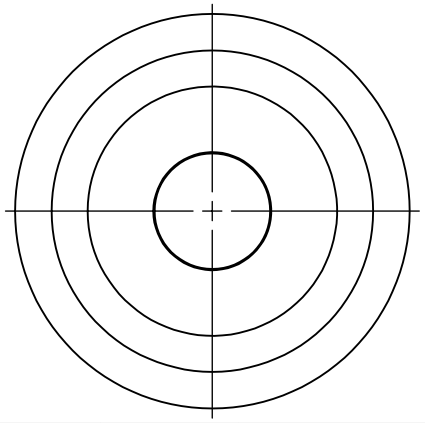

Note:
this is a minimally dimensioned drawing. Please refer to CAD for all dimensions

UNLESS OTHERWISE SPECIFIED: DIMENSIONS ARE IN MILLIMETERS SURFACE FINISH: TOLERANCES: LINEAR: ANGULAR:	FINISH: +/- 0.005in +/- 1deg				DEBURR AND BREAK SHARP EDGES	DO NOT SCALE DRAWING / REVISION
	NAME	SIGNATURE	DATE			TITLE: APRL Graphite Nozzle
DRAWN						
CHK'D						
APPV'D						
MFG						
Q.A				MATERIAL:		DWG NO. Bell_Nozzle / A4
				WEIGHT:		SCALE:1:2 / SHEET 1 OF 1

SOLIDWORKS Educational Product. For Instructional Use Only.