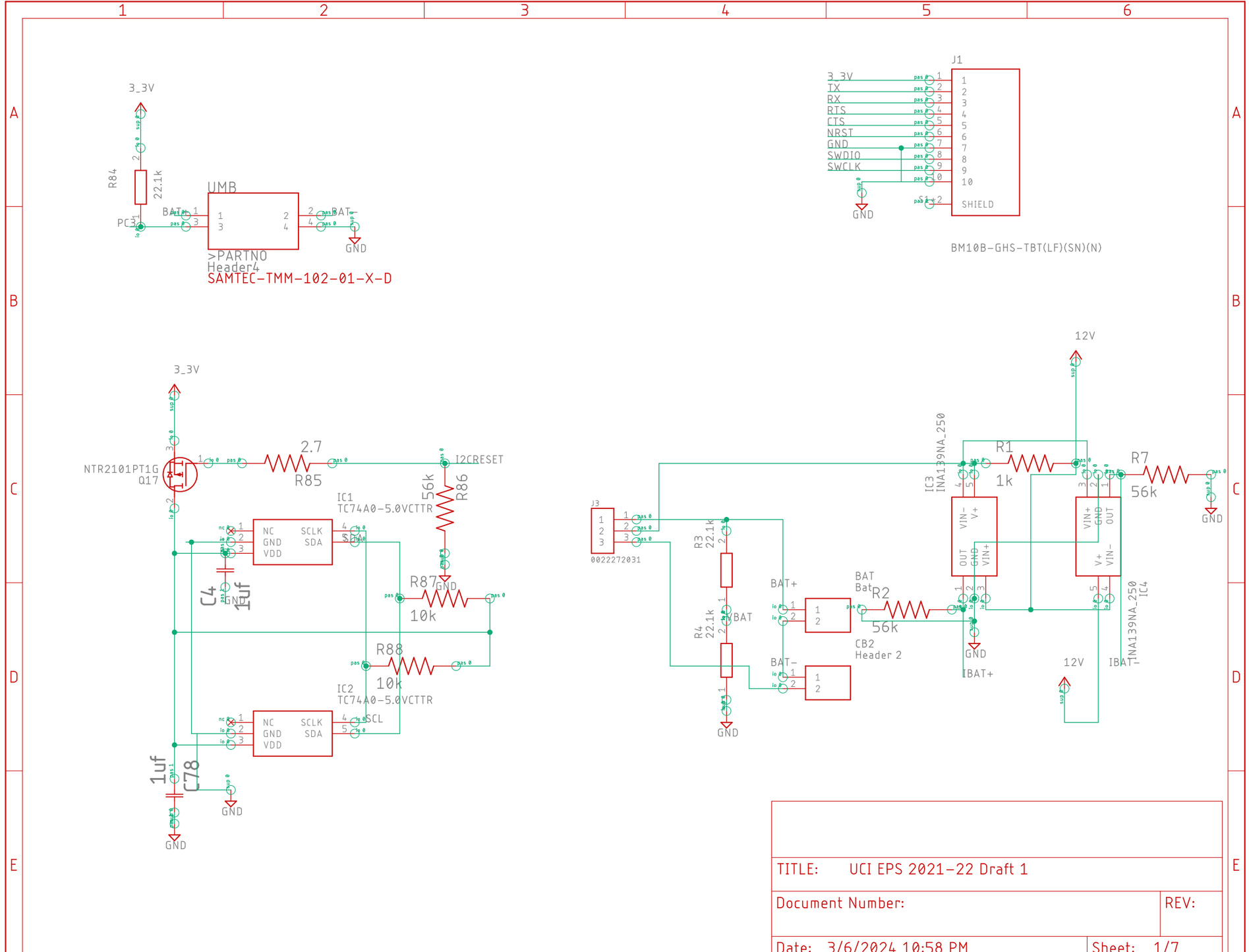
1
2
3
4
5
6
A
B
C
D
E
3_3V
R84
22.1k
PC3
BAT+
UMB
1
2
3
4
BAT-
GND
>PARTNO
Header4
SAMTEC-TMM-102-01-X-D
J1
3_3V
TX
RX
RTS
CTS
NRST
GND
SWDIO
SWCLK
SHIELD
GND
BM10B-GHS-TBT(LF)(SN)(N)
3_3V
NTR2101PT1G
Q17
2.7
R85
I2CRESET
IC1
TC74A0-5.0VCTTR
56k
R86
NC
GND
VDD
SCLK
SDA
SDA
C4
1uf
GND
R87
10k
R88
10k
IC2
TC74A0-5.0VCTTR
SCL
1uf
C78
GND
GND
12V
J3
0022272031
R3
22.1k
R4
22.1k
BAT+
BAT
BAT-
CB2
Header 2
BAT
Bat
R2
56k
IC3
INA139NA_250
R1
1k
R7
56k
GND
IBAT+
12V
IBAT
IC4
INA139NA_250
TITLE: UCI EPS 2021-22 Draft 1
Document Number:
REV:
Date: 3/6/2024 10:58 PM
Sheet: 1/7

# Solar Panel Power Generation

## Top Solar Panel

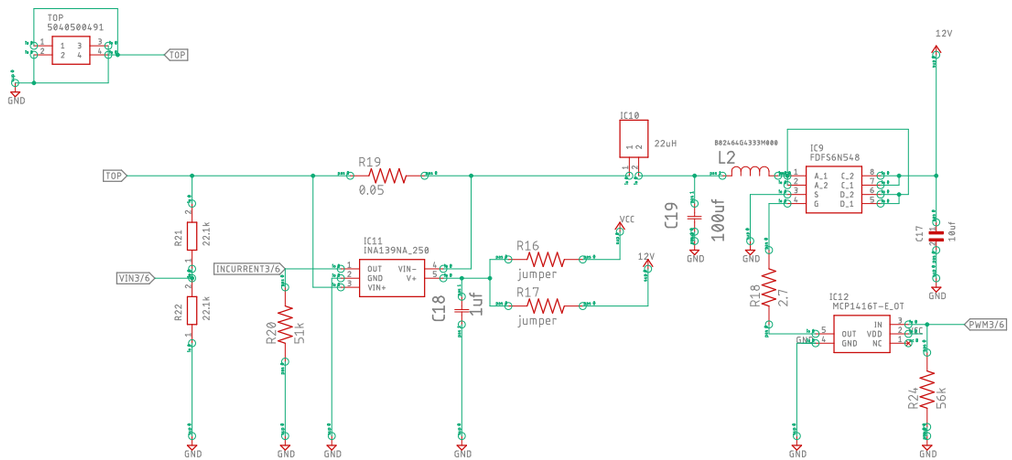


## Bottom Solar Panel

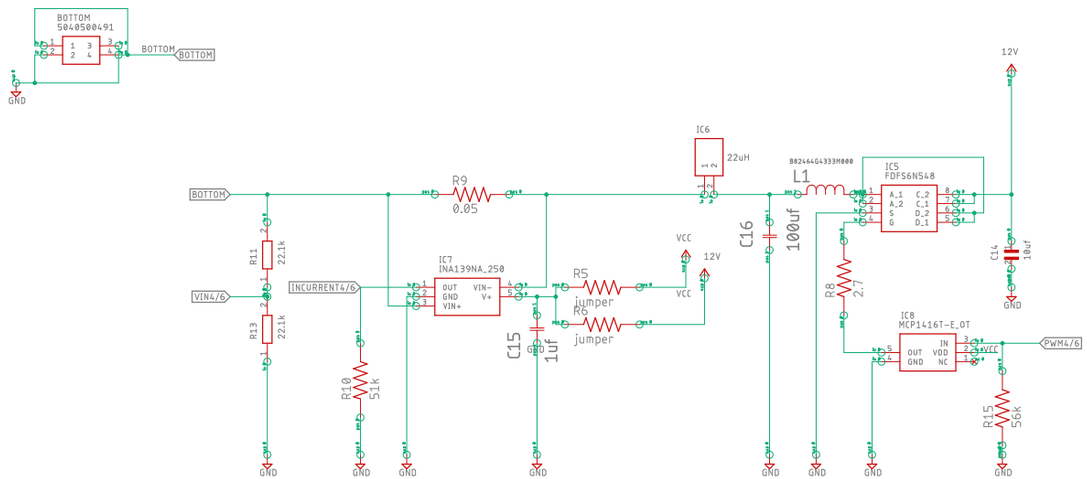


## Left Solar Panel

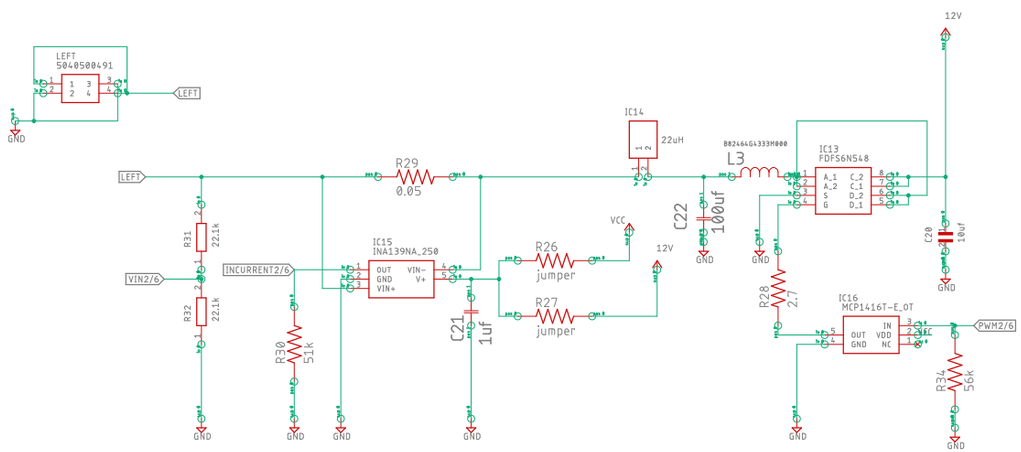


## Right Solar Panel

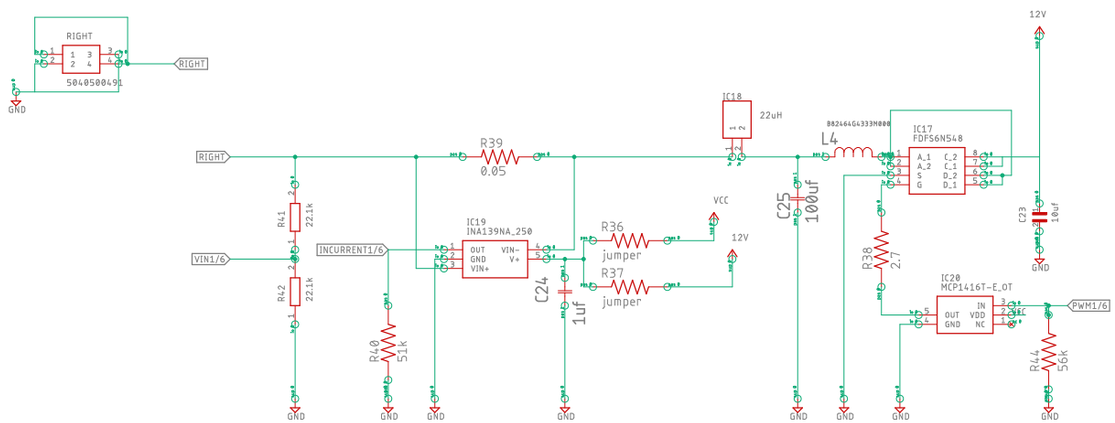

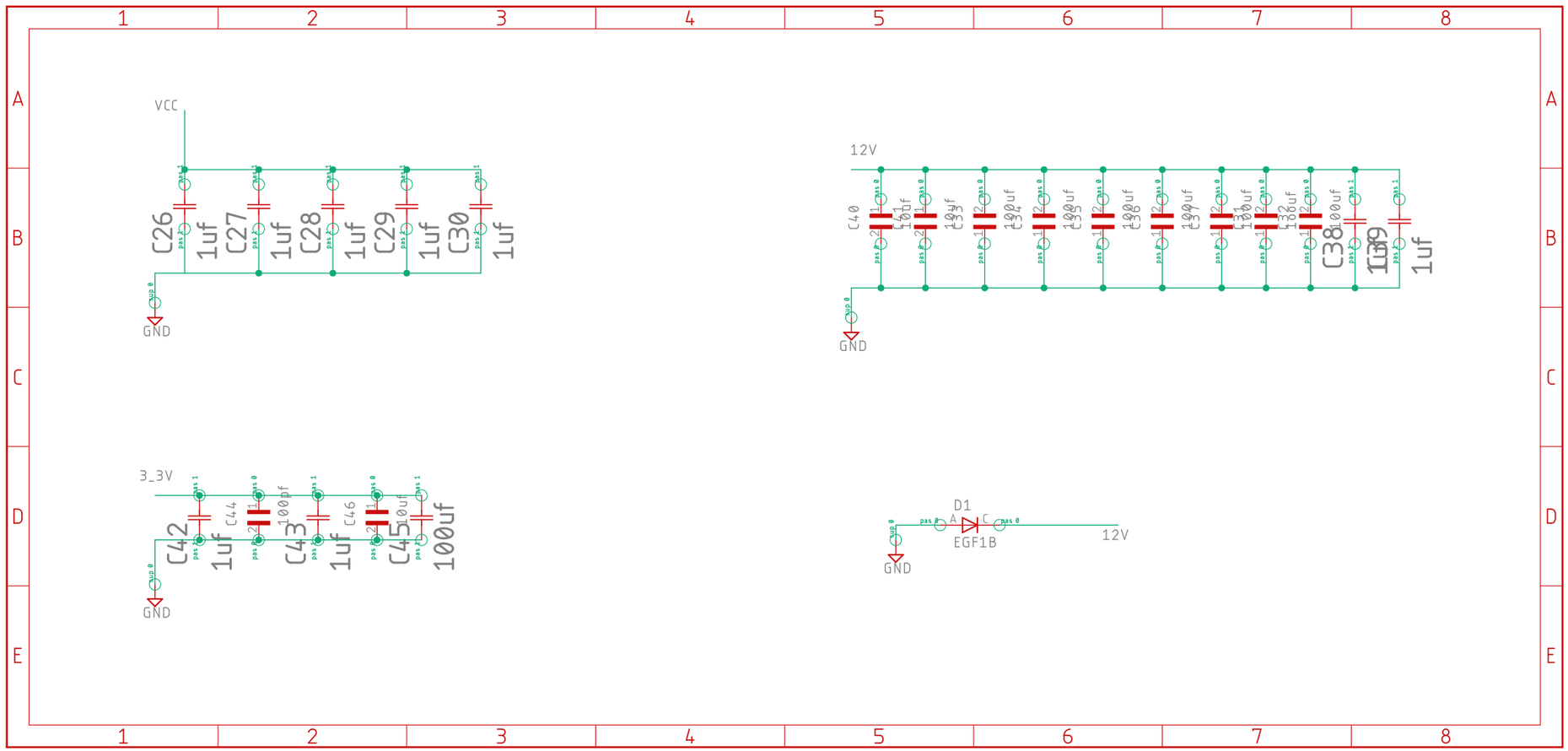
1
2
3
4
5
6
7
8
A
B
C
D
E
VCC
C26
1uf
C27
1uf
C28
1uf
C29
1uf
C30
1uf
GND
12V
C40
100uf
C41
100uf
C33
100uf
C34
100uf
C35
100uf
C36
100uf
C37
100uf
C31
100uf
C32
100uf
C38
100uf
C39
1uf
GND
3_3V
C42
1uf
C44
100uf
C43
1uf
C46
100uf
C45
100uf
GND
D1
A
C
EGF1B
12V
GND

## Panel Deployments?

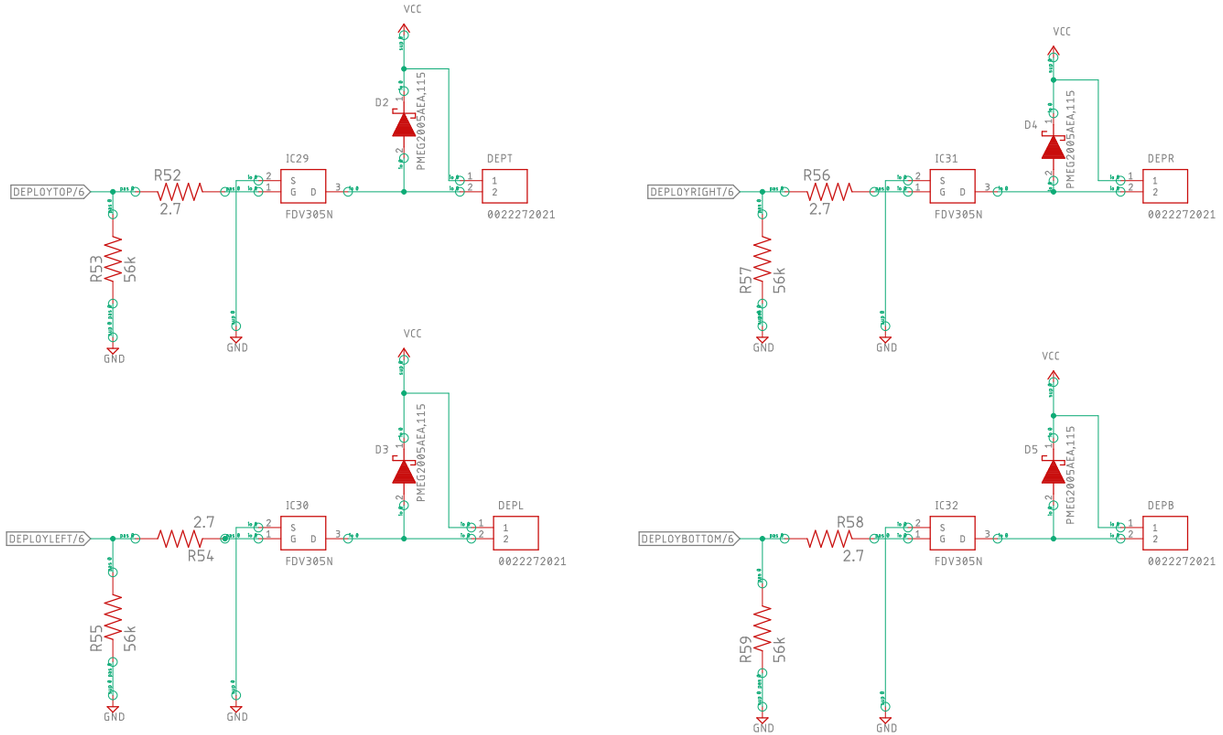


## Antenna + Heater Deployments

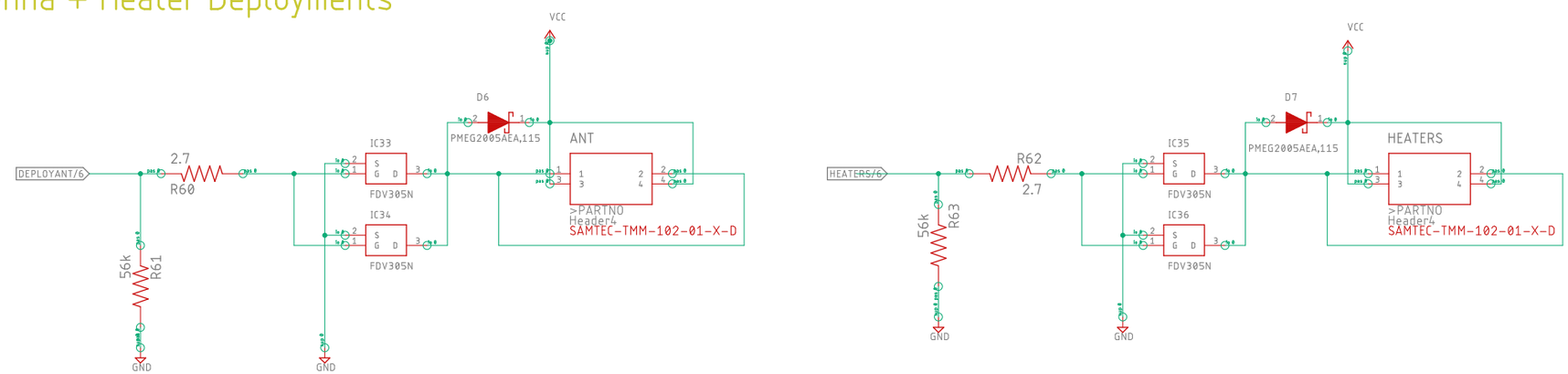

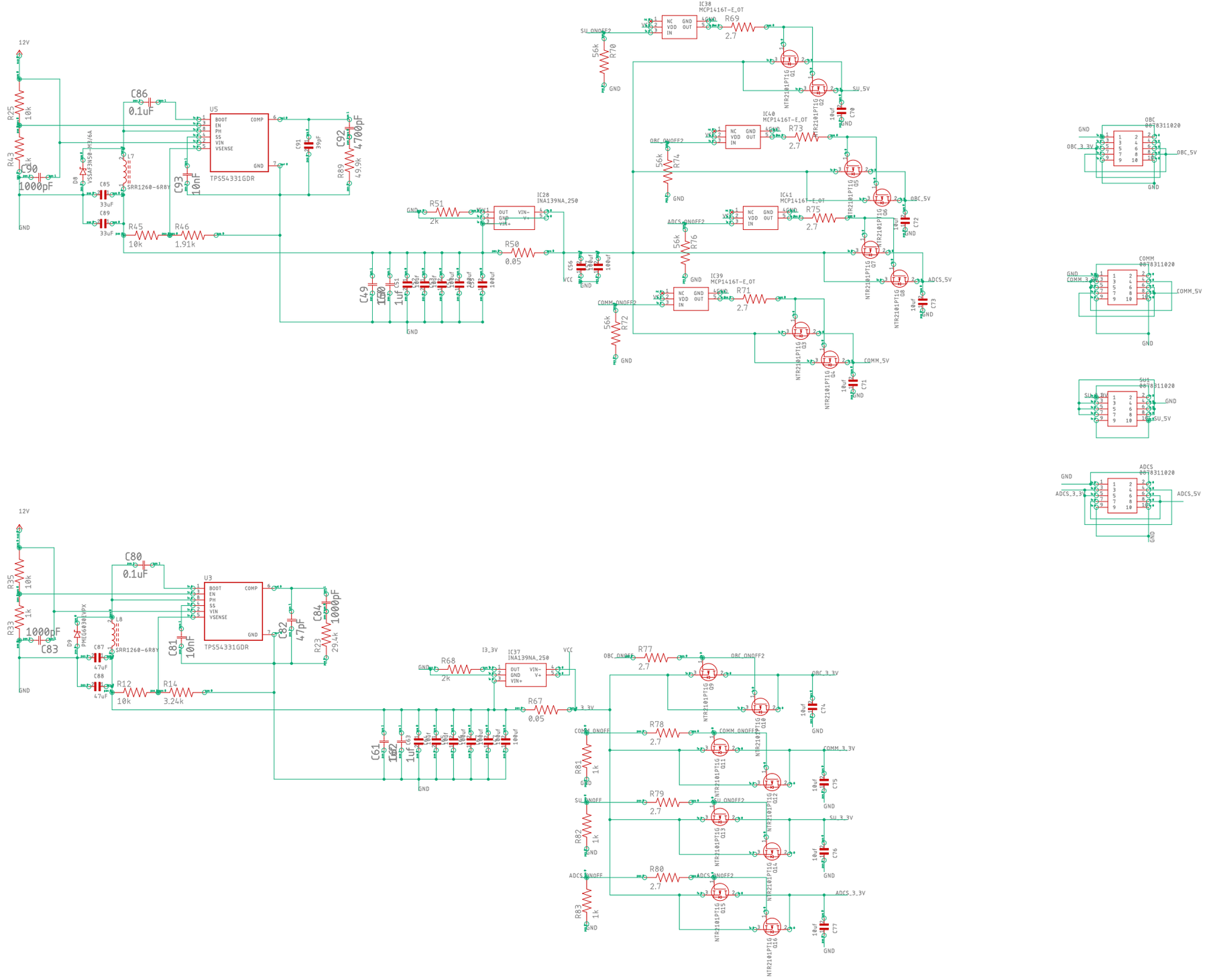

12V
R25
10k
R43
1k
C90
1000pF
GND
C86
0.1uF
U5
TPS54331GDR
BOOT
EN
PH
SS
VIN
VSENSE
COMP
GND
C91
39pF
C92
4700pF
R89
49.9k
C93
10nF
L7
SRR1260-6R8Y
D8
VSSAF3N50-M3/6A
C85
33uF
C89
33uF
R45
10k
R46
1.91k
R51
2k
IC28
INA139NA_250
R50
0.05
C49
1uF
C51
100uf
VCC
IC38
MCP1416T-E_OT
R69
2.7
SU_ONOFF2
56k
R70
SU_5V
IC40
MCP1416T-E_OT
R73
2.7
OBC_ONOFF2
56k
R74
OBC_5V
IC41
MCP1416T-E_OT
R75
2.7
ADCS_ONOFF2
56k
R76
ADCS_5V
IC39
MCP1416T-E_OT
R71
2.7
COMM_ONOFF2
56k
R72
COMM_5V
NTR2101PT1G
Q1
Q2
Q3
Q4
Q5
Q6
Q7
Q8
10uf
C70
C71
C72
C73
OBC
0078311020
OBC_3_3V
COMM
0078311020
COMM_3V
SU1
0078311020
SU_3_3V
ADCS
0078311020
ADCS_3_3V
12V
R35
10k
R33
1k
1000pF
C83
C80
0.1uF
U3
TPS54331GDR
C81
10nF
C82
47pF
C84
1000pF
R23
29.4k
C87
47uF
C88
47uF
R12
10k
R14
3.24k
R68
2k
IC37
INA139NA_250
R67
0.05
C61
1uF
C63
100uf
I3_3V
VCC
R77
2.7
OBC_ONOFF
OBC_ONOFF2
OBC_3_3V
R78
2.7
COMM_ONOFF
COMM_3_3V
R81
1k
R79
2.7
SU_ONOFF
SU_3_3V
R82
1k
R80
2.7
ADCS_ONOFF
ADCS_3_3V
R83
1k
NTR2101PT1G
Q9
Q10
Q11
Q12
Q13
Q14
Q15
Q16
10uf
C74
C75
C76
C77

# STM32

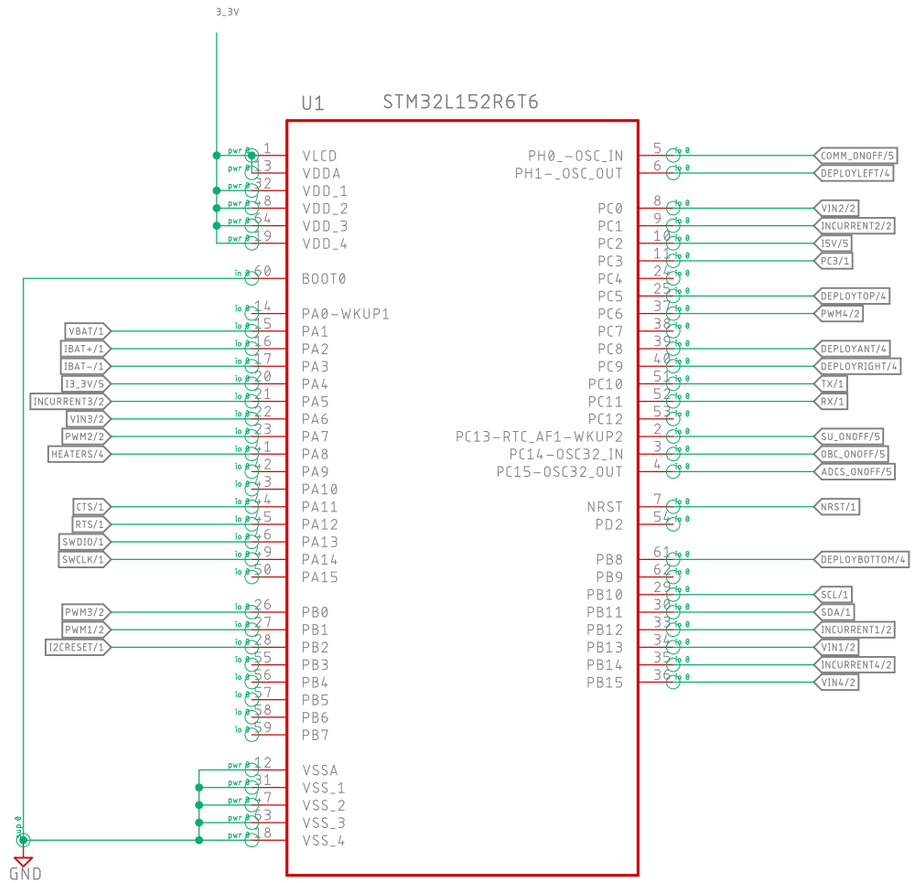

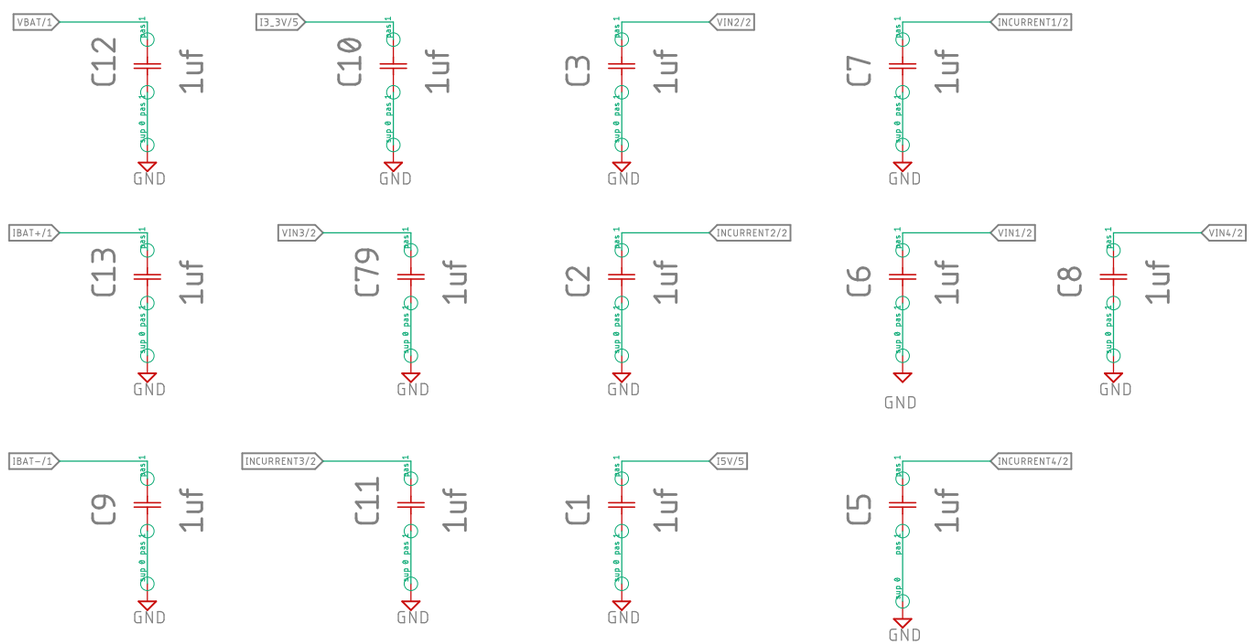
# I/O Decoupling Capacitors